NAVAL FACILITIES ENGINEERING SERVICE CENTER
Port Hueneme, California 93043-4370

CONTRACT REPORT
CR 97.007

ADVANCED CARGO BEACHING LIGHTER (ACBL) LOGISITICS ENGINEERING ADVANCED DEMONSTRATION (LEAD)

FINAL DESIGN REPORT
VOLUME I

An Investigation Conducted by

Bechtel National, Inc.
San Francisco, California

September 1997

Approved for public release; distribution is unlimited.

Printed on Recycled Paper

REPORT DOCUMENTATION PAGE

Form Approved
OMB No. 0704-018

Public reporting burden for this collection of information is estimated to average 1 hour per response, including the time for reviewing instructions, searching existing data sources, gathering and maintaining the data needed, and completing and reviewing the collection of information. Send comments regarding this burden estimate or any other aspect of this collection information, including suggestions for reducing this burden, to Washington Headquarters Services, Directorate for Information and Reports, 1215 Jefferson Davis Highway, Suite 1204, Arlington, VA 22202-4302, and to the Office of Management and Budget, Paperwork Reduction Project (0704-0188), Washington, DC 20503.

1. AGENCY USE ONLY *(Leave blank)*

2. REPORT DATE
September 1997

3. REPORT TYPE AND DATES COVERED
Final - September 1996 to July 1997

4. TITLE AND SUBTITLE
ADVANCED CARGO BEACHING LIGHTER (ACBL) LOGISITICS ENGINEERING ADVANCED DEMONSTRATION (LEAD) - FINAL DESIGN REPORT, VOLUME I; SUPPORTING CALCULATIONS, VOLUME II; DESIGN DRAWINGS, VOLUME III.

5. FUNDING NUMBERS
PE - 603712N
Contract No. N47408-93-D-7001 (DO-19)

6. AUTHOR(S)
Bechtel National, Inc.
San Francisco, CA 94119-3965

7. PERFORMING ORGANIZATION NAME(S) AND ADDRESSE(S)
Naval Facilities Engineering Service Center
1100 23rd Avene
Port Hueneme, CA 93043-4370

8. PERFORMING ORGANIZATION REPORT NUMBER
CR 97.007

9. SPONSORING/MONITORING AGENCY NAME(S) AND ADDRESSES
Office of Naval Research
Arlington, VA 22217-5000

10. SPONSORING/MONITORING AGENCY REPORT NUMBER

11. SUPPLEMENTARY NOTES

12a. DISTRIBUTION/AVAILABILITY STATEMENT
Approved for public release; distribution is unlimited.

12b. DISTRIBUTION CODE

13. ABSTRACT *(Maximum 200 words)*

In a Joint Logistics Over the Shore (JLOTS) operation, throughput ceases in sea state three (SS3) conditions. To help resolve this deficiency the Naval Facilities Engineering Service Center (NFESC) began development of an advanced causeway lighter/platform system, the Amphibious Cargo Beaching Lighter (ACBL), that promised significant advances in JLOTS capability. Technology issues were quickly resolved in the development of this modular system, which promised ease of transport, increased payload capacity and the ability to safely operate in SS3; however, it became clear that an open-sea connection system would be required to assemble platforms in theater. This system would need both rigid (module to module, e.g., for assembly of a causeway section) and flexible (section to section, e.g., for assembly of a causeway ferry) connectors. Because an extensive market survey did not reveal any commercial source for either of these technologies, a development program was begun by the Navy under funding from the Office of Naval Research (ONR). Via this program NFESC has successfully developed concepts for both rigid and flexible SS3 connectors. Preliminary evaluation of these concepts has already been conducted via model testing. This report documents the final design of these preliminary concepts in preparation of a full-scale demonstration planned for 1998.

14. SUBJECT TERMS
Amphibious Cargo Beaching Lighter (ACBL), Navy Lighter (NL), Joint Logistics Over the Shore (JLOTS), pontoons, barges, causeways, lighters.

15. NUMBER OF PAGES
1156

16. PRICE CODE

17. SECURITY CLASSIFICATION OF REPORT
Unclassified

18. SECURITY CLASSIFICATION OF THIS PAGE
Unclassified

19. SECURITY CLASSIFICATION OF ABSTRACT
Unclassified

20. LIMITATION OF ABSTRACT
UL

PREFACE

By Patrick R. Kane
Naval Facilities Engineering Service Center

In a Joint Logistics Over the Shore (JLOTS) operation, throughput ceases in sea state three (SS3) conditions. In 1993, the Director of Logistics Plans & Policy/Strategic Sealift Programs for the Office of the Chief of Naval Operations (N42) recognized this as a deficiency and requested research and development of an advanced replacement lighter to improve throughput capability under degraded environmental conditions. In response to this request the Naval Facilities Engineering Service Center (NFESC) began development of an advanced causeway lighter/platform system, the Amphibious Cargo Beaching Lighter (ACBL), that promised significant advances in JLOTS capability. Technology issues were quickly resolved in the development of this modular system, which promised ease of transport, increased payload capacity and the ability to safely operate in SS3; however, it became clear that an open-sea connection system would be required to assemble platforms in theater. This system would need both rigid (module to module, e.g., for assembly of a causeway section) and flexible (section to section, e.g., for assembly of a causeway ferry) connectors. Because an extensive market survey did not reveal any commercial source for either of these technologies, a development program was begun by the Navy under funding from the Office of Naval Research (ONR). Via this program NFESC has successfully developed concepts for both rigid and flexible SS3 connectors. Preliminary evaluation of these concepts has already been conducted via model testing. This report documents the final design of these preliminary concepts in preparation of a full-scale demonstration planned for 1998.

Based on emerging operational requirements and the potential of the ACBL concept, both the Army and Navy have stated a need to replace their existing causeway system assets. In accordance with new acquisition guidelines, the Government intends to procure a new causeway system based only on identified operational requirements. This acquisition has been named the Joint Modular Lighter System (JMLS). It is important to note that the ACBL effort undertaken at NFESC has been focused toward identifying and resolving potential technology shortfalls for the new system and to ensure that the requirements for a new system are attainable. As such, the ACBL concept is not meant to be offered by the Government as the only solution to meet the JMLS requirements.

This report documents a work-in-progress and is intended to provide preliminary information on the NFESC connector development effort to those considering participating in the JMLS acquisition. Please note that as of the publication date of this report that no hardware has been built according to the referenced design drawings. After fabrication, the drawings will be modified to reflect an as-built condition. After the demonstration, a report will be written providing an evaluation of the connection systems and documenting appropriate environmental and engineering data (e.g., loads on the bridle system and the connectors during the connection process and once connected).

The information in this report should not be used to determine JMLS requirements. Specific requirements were added to this design effort to facilitate demonstration of the connection systems and are not likely to be present in the JMLS acquisition. JMLS requirements will be officially published through proper acquisition channels.

CONTENTS

VOLUME I

EXECUTIVE SUMMARY
1. INTRODUCTION 1-1
2. DESIGN CRITERIA 2-1
3. R1 CONNECTOR 3-1
4. R2 CONNECTOR 4-1
5. F1 CONNECTOR 5-1
6. PC1 CONNECTOR 6-1
7. HULL STRUCTURE 7-1
8. TOLERANCES 8-1
9. MARRIAGE BRIDLES 9-1
10. INSTRUMENTATION 10-1
11. WEIGHT ESTIMATE 11-1
12. SPECIFICATIONS 12-1
13. CONCLUSIONS AND RECOMMENDATIONS 13-1
14. GLOSSARY 14-1
15. REFERENCES 15-1

APPENDICES
- A DESIGN BASIS
- B SPECIFICATIONS
- C WEIGHT ESTIMATE
- D STRUCTURAL ANALYSIS REPORT

VOLUME II - CALCULATIONS

VOLUME III – DRAWINGS

LIST OF FIGURES AND TABLES

Figure ES-1. Amphibious Cargo Beaching Lighter ES-7

Figure ES-2. R1 Connector ES-8

Figure ES-3. R2 Connector ES-9

Figure ES-4. F1 Connector ES-10

Figure 1-1. Amphibious Cargo Beaching Lighter 1-3

Figure 3-1. Original R1 Concept - Sheet 1 3-9

Figure 3-2. Original R1 Concept - Sheet 2 3-10

Figure 3-3. Original R1 Concept - Sheet 3 3-11

Figure 3-4. Original R1 Concept - Sheet 4 3-12

Figure 3-5. Original R1 Concept - Sheet 5 3-13

Figure 3-6. R1 Pin Load Transfer System 3-14

Figure 3-7. R1 Partial Pin Engagement 3-15

Figure 7-1. Ship's Guide System 7-12

Figure 7-2. Assumed Fender Compression 7-13

Figure 8-1. Potential Vertical Relative Displacement at the Pontoon End 8-4

Figure 8-2. Potential Rotation at the Pontoon End 8-5

Table 10-1. Connector Pin Forces for Test Configurations 10-3

EXECUTIVE SUMMARY

Introduction

Proven connection systems for connecting barge modules in Seastate 3, associated with open seas, do not currently exist. Naval Facilities Engineering Service Center (NFESC) is responsible for initiating and completing a project that will allow further advances on barge module connection system technology. Through a series of development projects NFESC developed two rigid connector concepts and one flexible connector concept.

Bechtel National Inc., Marine Structures Group (formerly PMB Engineering, Inc.) was awarded a contract, as part of the Logistics Engineering Advanced Demonstration (LEAD) project, to develop the NFESC-supplied connector concepts and barge modules (the assembled module system referred to as test beds) to the detail design level. These connection systems consist of two rigid connection concepts, designated R1 and R2, and one flexible connection system, designated F1. The scope of work included detailed design of the connectors, the pontoons forming the test bed, the pontoon-to-pontoon connectors, and the marriage bridle rigging used in the mating process. The work also included designing the strain gaging system to be used during testing to determine connector loads. The resulting designs will be used to fabricate full-scale test beds and connectors and evaluate them in the dynamic ocean environment.

System Description

The system overview is shown in Figure ES-1. It consists of four test beds, each assembled from three pontoons. The two center test beds have R1 Connectors on one end, R2 Connectors on the other end, R1 Connectors on one side, and R2 Connectors on the other side. The two raked test beds have the flexible F1 Connectors on the raked ends and then either R1 or R2 Connectors on the opposite ends. They have R1 and R2 Connectors on opposite sides. The connector arrangements are such that the test program can assemble units one wide by two or three test beds long and two wide by two long using the different connector types.

The pontoons are 8 x 8 x 40 feet and are designed to meet the handling requirements of a standard 40-foot ISO container, i.e., they have ISO fittings for lifting and stacking at the corners and at the nominal 20-foot dimensions. These fittings are removable for the outboard pontoons. The outer fittings are replaced in service with rubber fenders. The inboard fittings are removable to allow the assembled test bed to be loaded into a container ship and fit over the container separating guides. The pontoons are assembled together using pontoon-to-pontoon connectors.

In addition to the principal features, auxiliary items include recessed cleats and mooring rings, external ladders, lift points for lifting the assembled test bed, and hatches for access to instrumentation equipment and inspection. Other auxiliary items are fenders and rigging used during the mating process.

Objective

The objective of this work was to finalize the conceptual design and produce design documents suitable for a fabricator to construct the test beds, connectors, and all related components ready for at-sea tests of the system.

Design Criteria

Design criteria for this project were determined from the Statement of Work and numerous documents supplied by NFESC as Government Furnished Information (GFI). Since the design is complex and the data and criteria were scattered through various sources, a Design Basis document (Appendix A) was prepared. The Design Basis includes a detailed description of the system and components, material definitions and allowable stresses, and, most importantly, design loads. Design requirements included mating operations under Seastate 3 and survival of assembled system under Seastate 5. the assembled system was assumed to consist of up to four test beds 160 feet long. The design loads were developed by NFESC from hydrodynamic computer analyses for the numerous prototype design configurations which the test beds could potentially experience. These loads are several times the magnitude of the loads used during concept development and made the design of the system a major structural engineering challenge.

R1 Connector

At the start of this detailed design phase, the R1 Connector had undergone the most development work. The concept was developed by NFESC, and preliminary engineering was completed. Finite element studies had been performed and model tests completed. The scope of work for this phase was to modify the existing concept as required to meet final design load criteria and finalize the design with detailed calculations and drawings.

The connector assembly, shown in Figure ES-2, is enclosed in a removable steel space frame assembled from rectangular tubing sections. The frame contains one pin assembly, which is a steel pipe pin backed up by a large spring. The pin is stored in a retracted position and advanced outward by means of a lever when needed. After advancing it outward, a guillotine is set behind the pin to hold it in place. During mating, if the pin misses the receptacle on the opposing test bed, it will compress the spring, which acts as a shock absorber. In addition to the pin, a receptacle is provided that receives the pin from an opposing connector. The connectors are installed on test beds in opposing pairs, one with the pin up and one with the pin down. The connector is universal and can be installed either way. Once mating is complete, a guillotine is set in the slot at the end of the pin.

Associated with the R1 Connector is a separate rubber alignment pin located in a hawespipe at mid height. This pin is connected to the marriage bridle used to pull the test beds together and serves to align the beds closely enough so that the pins will engage the receptacles.

Structurally, the system functions in two ways. During mating operation, due to pin tolerances, one pin will bind and transfer all the hull shear and bending force to the frame. This case controls the pin design. After mating, when the system must survive a larger seastate, the pin takes tension, acting in conjunction with the opposing deck edge in compression to resist hull bending. Pin reactions are transferred by the heavy face frame to the hull by means of side plates that engage slots in the hull.

Although the concept remains nominally the same as originally conceived, it is substantially heavier due to the increased design loads. For example, the outboard portion of the frame that supports the pins has been modified from an assemblage of light structural tubes to a heavy wide-flange beam made of 90-ksi yield strength steel. The pins increased from 12-inch standard pipe to 16-inch diameter by 1.5-inch-thick, 70-ksi pipe. Other modifications include the use of double guillotines to allow for a square rather than tapered slot and release systems for setting the guillotines during operation. The entire assembly weighs an estimated 5,150 pounds.

R2 Connector

The R2 Connector is shown in Figure ES-3. Conceptually, the connector is similar to the R1 in that a single pin will take all the mating load and transfer this bending moment to a vertical beam for transfer into the hull. The principal difference is that the vertical beam is built into the end of the hull and the connector is not unitized. Since only one pin will carry load at a time during mating, only the lower pin is extended at this time. Thus, only one of the two pins must be designed for the high bending moment imposed by mating. The second (top) pin is installed after mating is complete and serves to increase the connection capacity for the survival seastate.

In this case, there is no separate alignment pin; the rubber alignment pin is attached directly to the lower pin. Also, since the pins are fixed in position during mating and do not have the energy absorbing spring behind them, a fender system is provided for use during mating. The fenders are temporarily suspended over the side and removed at the last minute as mating is finalized.

The lower pin, which is used for mating, is a rectangular pin in a matching hole through the vertical beam built into the end of the hull. In the mated condition, this pin acts in tension, forming a couple with the bearing at the top of the hull in compression, to resist bending that produces pin tension. Behind the pin is the hawsepipe that serves to store the pin and transitions to a round pipe to the deck for the marriage bridle. Behind the vertical beam is an enclosed guillotine slot. The single guillotine is permanently installed and has reach rods to the handle/release mechanism at the deck.

The upper pin is a smaller rectangular pin located just below the deck. This pin is designed to take only tension, forming a couple with the bearing pads at the hull bottom to resist bending that produces pin tension. The pin load is transferred in tension with small guillotines which are set after the lower guillotine is placed.

As with the R1 Connector, due to the high loads the vertical beam (integrated into the hull) and the pins are 90-ksi yield strength steel.

F1 Connector

The F1 Connector is based on the NFESC design developed for a previous field test of the concept. The connector arrangement was kept nominally as originally shown, but scaled up for the larger loads required by this project's design criteria. Mechanically, the only change was to add a bearing material, eliminating the steel-on-steel bearing. Additionally, a second guillotine was added for the connector to dock against during mating while the load-carrying guillotine is installed.

The concept consists of two opposing weldments hinged together with a single horizontal hinge. The weldments reside in a trench just below the deck level. The trench is long enough to store the entire assembly, which consists of the hinged weldments and rubber alignment pin. The connector is shown on Figure ES-4.

Functionally, the connector allows relative pitch between test beds while restraining roll, yaw, heave, surge, and sway. Since there is no relative pitch load during mating the loads are much more manageable than for the R1 and R2 Connectors, and the connectors are made of 50-ksi yield strength material. The only exception is the pin, which is highly stressed and requires 150-ksi yield steel. The bearing is also highly stressed and uses a teflon impregnated composite material.

Pontoon-to-Pontoon Connector

Three individual 8-foot-wide pontoons are attached together to form one test bed by using a simple connector designated PC1. This connector between two pontoons consists of bolts in tension at the top and bottom decks and a shear transfer plate at mid height. The shear plate is installed in mating recesses in the hull sides prior to assembly. The pontoons are brought together and the bolts installed top and bottom. It is assumed that mating will be done either on land or on a ship deck, and therefore the pontoons are on blocks so that the bottom is accessible for bolting.

Hull Structure

The test bed is a barge-type structure consisting of three parallel pontoons rigidly attached together. Structurally this assemblage must support live loads, transmit connector forces between assembled test beds longitudinally and transversely, resist hydrostatic loads, and resist wave loads. The individual pontoons are boxes that carry the global loads as beams in bending and shear. Hydrostatic loads, wave loads, and deck loads are carried by local structure consisting of plate, stiffeners, and frames. The frames ultimately transfer the load into the pontoon skin as shear where it is balanced by opposing forces.

The design of the hull was approached from the local framing outwards. First a framing system was developed, then the local plate, stiffeners, and frames were designed. Next, the structure was analyzed globally and the structure, previously developed for local loads, was checked for global stresses. Finally, the local structure in the region of the connectors was designed to transfer the connector loads into the hull structure.

In addition to the basic structure, the hull includes various structural and non-structural appurtenances such as hawsepipes, lift points, cleats/mooring rings, ladders and hatches. These were designed after the basic design was complete and were incorporated into the basic structure.

Tolerances

The need for close tolerance control in the fabrication of the Lighterage system results from the required degree of interconnectability of the pontoon sections. In order to ensure that pontoons are standardized and interchangeable, the mating points must be held to tight dimension control so that several pontoons can be connected without excessive tolerance accumulation, which could prevent mate-up of subsequent sections.

To achieve these objectives cost-effectively, the pontoon sections have been designed so that standard industrial practice and typical tolerances are acceptable for most construction. The use of close tolerance control is limited to critical dimensions that are integral to the pontoon interconnections. These are the dimensions that:

- Define the points of contact between connected pontoons
- Locate the connector in the pontoon
- Define the size and shape of the connector.

Close tolerance is expected to be measured using electronic theodolites or similar optical survey equipment, directly coupled with computer-aided data reduction. These techniques can, over the distances expected for pontoon fabrication and inspection, achieve measurement accuracies of a few thousandths of an inch.

Marriage Bridles

The marriage bridle is used to pull the test beds together during the assembly process. The mating operation is performed in the water with warping tugs maneuvering the two mating test beds. The marriage bridle consists of two lines which are threaded trough the hawsepipes in the receiving test bed and attached to the connector pins or alignment pins on the donor test bed. The live end is then reeved through deck-mounted blocks and chocks to a winch on the warping tug holding the receiving test bed. The lines are then used to pull the test beds together while the tugs maintain nominal pretension.

Since mating is intended to occur in up to Seastate 3 conditions, the lines will be subject to substantial dynamic loads. To minimize these loads, the marriage bridles include nylon energy-absorbing pigtails for the longitudinal mating condition.

Since there are several different arrangements for testing, including different connectors and end-to-end vs. side-to-side, the details of rigging for each are different. However, all of the various marriage bridle configurations include a primary pulling line, which is a 1-inch-diameter by 150-foot-long wire rope. For the longitudinal marriage bridle arrangements this is attached to a 1.5-inch-diameter by 29-foot-long nylon pigtail before attaching to the donor test bed. The nylon pigtail is not used in the transverse case

because the nylon rope hardware will not fit through the transverse hawsepipes, and the dynamic load is anticipated to be less severe.

Although not part of the marriage bridle, the winch which the Navy intends to use was reviewed as part of this project's scope of work. The principal issues raised were the structural and mechanical strength of the winch to sustain the high dynamic line loads and the tendency of the line to pull into previous wraps under dynamic loading. NFESC investigated the winch capacity and determined that it could sustain the loads. The line pull-in problem still remains and will have to be resolved in the field. Experience indicates that field personnel should be prepared to be able to free a line buried in lower wraps. An alternative method to reduce the snap load and line pull-in problem would be to use a constant tension winch.

Instrumentation

One of the primary purposes of this project is to verify anticipated performance and obtain design data for potential prototype development. Load data will be obtained by measuring strain, and thus stress and load, with strain gages recording data as mating and survival conditions are encountered. The strain gages are installed on all connector pins. For the R1 and R2 pins the gages are installed directly to the weldments and pigtails provided to run to the data gathering point in the middle pontoon. For the F1 Connector the hinge pin is an instrumented clevis pin.

Weight Estimate

Due to the very high connector design loads and the high local deck load design criteria, the test bed weight is heavier than the original goal of 40 LT (later revised to 60 LT). The final estimated lift weights are 62.7 LT for the center test bed and 62.2 for the raked test beds.

Conclusions and Recommendations

In order to meet all the criteria, including the very high loads, the test beds will be a challenge to construct. It is expected that a similar prototype design would be somewhat less complex, with the elimination of multiple connectors and a reduction in weight.

Recommendations include:

1. Provide for remote controlled cutting of marriage bridle if it becomes jammed into winch wraps from snap loading.
2. Use a constant tension winch to minimize snap loads during mating.
3. Consider optimizing the pontoon-to-pontoon connector.
4. Based on fabrication and test experiences, review the design for tolerance issues and modify tolerances based on experience.

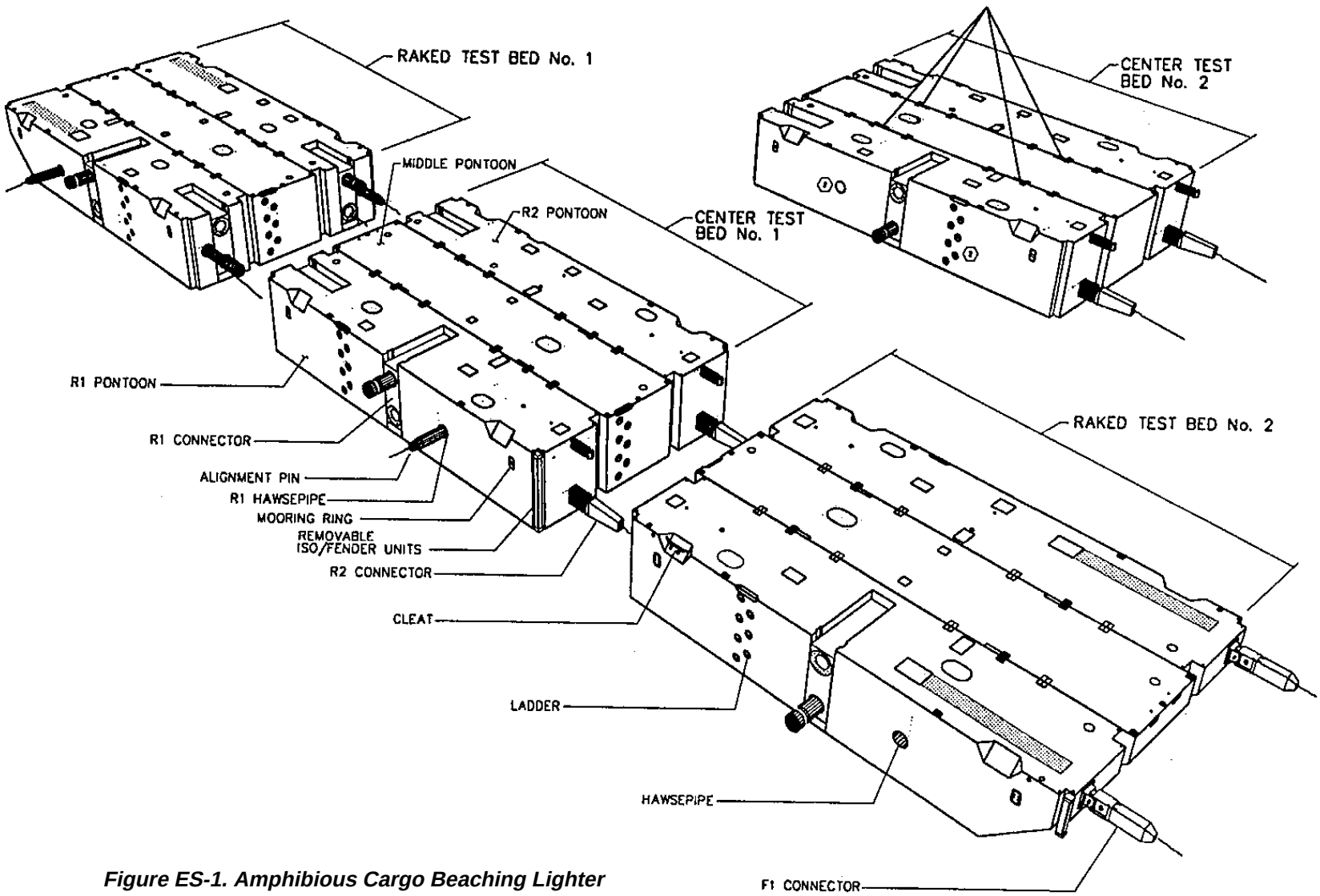

Figure ES-1. Amphibious Cargo Beaching Lighter

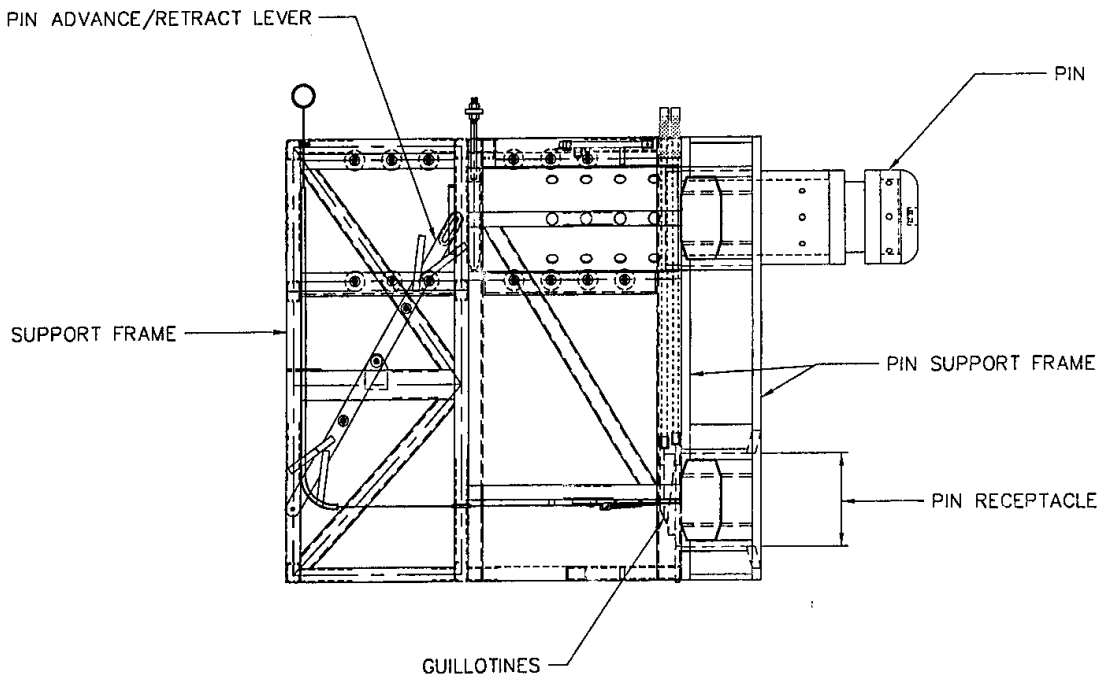

Figure ES-2. R1Connector

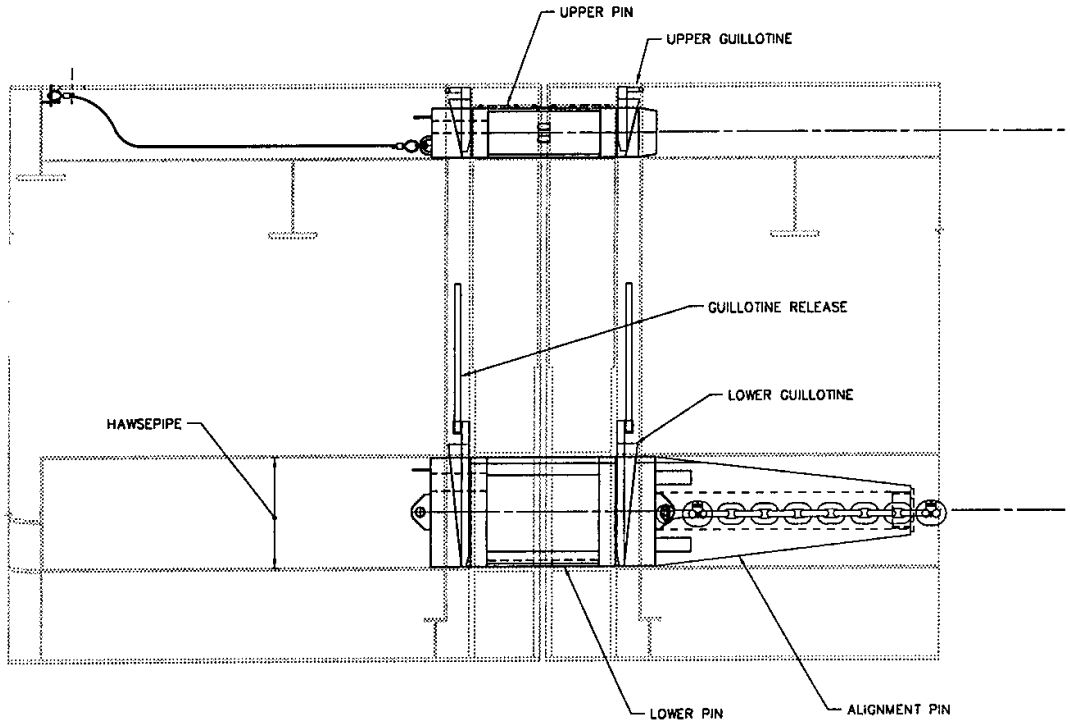

Figure ES-3. R2 Connector

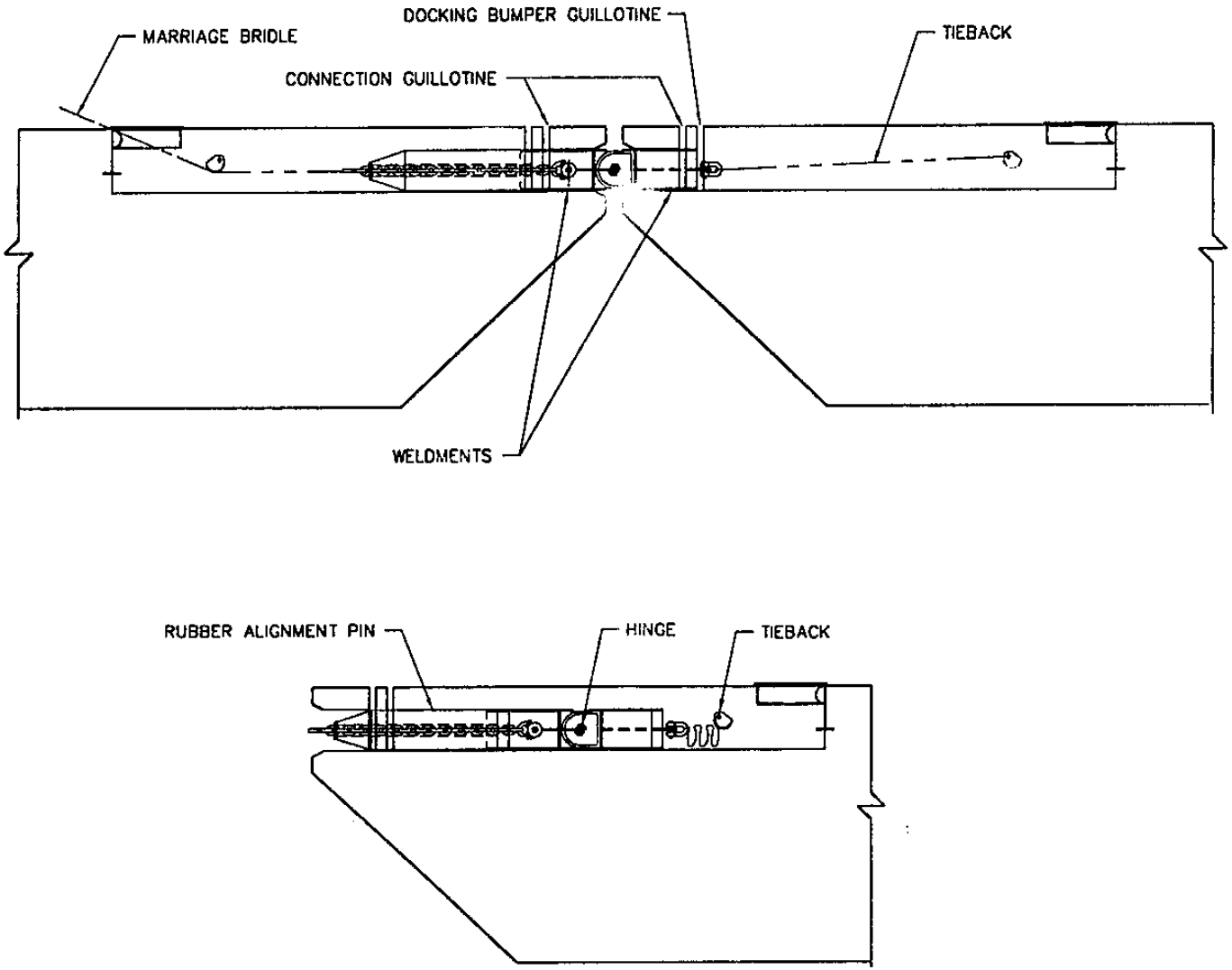

Figure ES-4. F1 Connector

1 INTRODUCTION

1.1 Background

Proven connection systems for connecting barge modules in Seastate 3, associated with open seas, do not exist currently. Naval Facilities Engineering Service Center (NFESC) is responsible for initiating and completing a project that will allow further advances on barge module connection system technology. Through a series of development projects NFESC developed two rigid connector concepts and one flexible connector concept.

Bechtel National Inc., Marine Structures Group (formerly PMB Engineering Inc.) was awarded a contract, as part of the Logistics Engineering Advanced Demonstration (LEAD) project, to develop the NFESC-supplied connector concepts and barge modules (the assembled module system referred to as test beds) to the detail design level. These connection systems consist of two rigid connection concepts, designated R1 and R2, and one flexible connection system, designated F1. The scope of work included detailed design of the connectors, the pontoons forming the test bed, the pontoon-to-pontoon connectors, and the marriage bridle rigging used in the mating process. The work also included designing the strain gaging system to be used during testing to determine connector loads. The resulting designs will be used to fabricate full-scale test beds and connectors and evaluate them in the dynamic ocean environment.

This report describes the final design of all components. The primary product is a set of detailed design drawings, which are attached as Volume III. It is assumed that the reader has a set of the drawings available when reading this report. The report summarizes development of criteria, design aspects of all components, tolerance issues, instrumentation, component weights, and specifications. Appendices include the Design Basis, Specifications, Weight Estimate, Structural Analysis Report, Supporting Calculations, and the Drawings.

1.2 System Description

The system overview is shown in Figure 1-1. It consists of four test beds, each assembled from three pontoons. The two center test beds have R1 connectors on one end, R2 connectors on the other end, R1 connectors on one side, and R2 connectors on the other side. The two raked test beds have the flexible F1 connectors on the raked ends and then either R1 or R2 connectors on the opposite ends. They have R1 and R2 connectors on opposite sides. The connector arrangements are such that the test program can assemble units one wide by two or three test beds long and two wide by two long using the different connector types.

The pontoons are 8 x 8 x 40 feet and are designed to meet the handling requirements of a standard 40-foot ISO container, i.e., they have ISO fittings for lifting and stacking at the corners and at the nominal 20-ft dimensions. These fittings are removable for the

outboard pontoons. The outer fittings are replaced in service with rubber fenders. The inboard fittings are removable to allow the assembled test bed to be loaded into a container ship and fit over the container separating guides. The pontoons are assembled together using pontoon-to-pontoon connectors.

In addition to the principal features, auxiliary items include recessed cleats and mooring rings, external ladders, lift points for lifting the assembled test bed, and hatches for access to instrumentation equipment and inspection. Other auxiliary items are fenders and rigging used during the mating process.

1.3 Objective

The objective of this work was to finalize the conceptual design and produce design documents suitable for a fabricator to construct the test beds, connectors, and all related components ready for at-sea tests of the system.

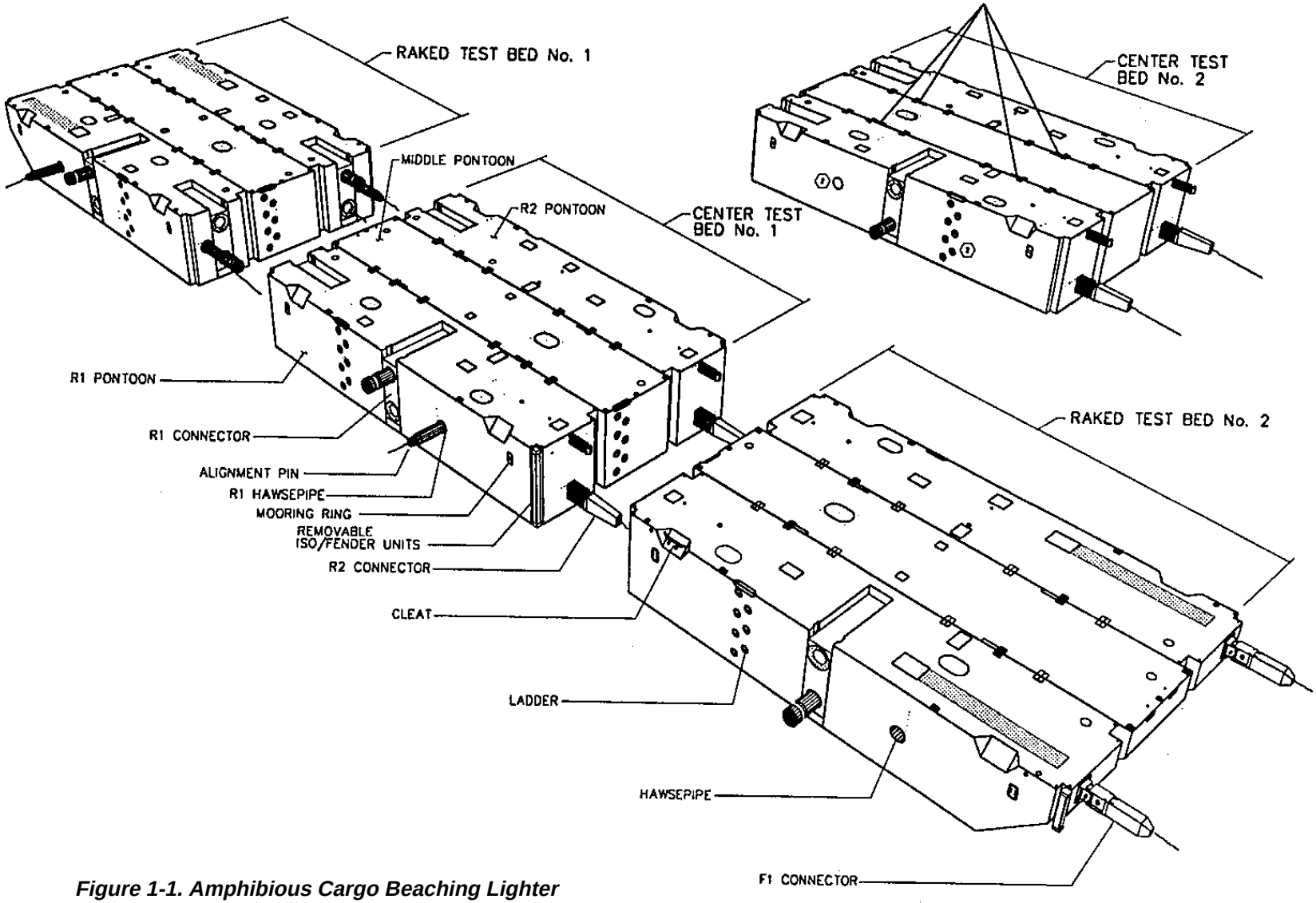

Figure 1-1. Amphibious Cargo Beaching Lighter

2 DESIGN CRITERIA

2.1 Design Criteria Summary

Design criteria for this project were determined from the Statement of Work and numerous documents supplied by NFESC as Government Furnished Information (GFI). Since the design is complex and the data and criteria were scattered through various sources, a Design Basis document was prepared and is included as Appendix A. The Design Basis document was prepared in draft form, reviewed by NFESC, and later revised. The primary purpose of the document was to provide a concise summary of criteria for the project staff and to ensure that all staff use the same data.

After a statement of the design objective, the Design Basis contains a general description of all the components of the Amphibious Cargo Beaching Lighter test beds and connectors. The next sections concern environmental criteria and loads. Environmental criteria were defined in the Statement of Work; however, they were not used directly by the project since NFESC performed all analyses for environmental loadings. The global design loads resulting from NFESC's analysis were the primary basis of design and control most of the structure design. These global design loads were initially delivered in a report and subsequently modified and augmented, as required. Local design loads were defined by NFESC based on typical pontoon criteria. The most significant of these local loads is the local deck load, which is very high due to a heavy wheel load.

Materials are defined only to the extent that mild steel would be used to the maximum extent possible. Due to the very high connector loads and the high deck load, the final test bed design includes significant quantities of high-strength steels up to 90-ksi yield strength. Structural design criteria are defined in terms of applicable codes and stress levels. In general, the design conforms to AISC working stress design, including a one-third allowable increase for extreme conditions, except for the design of the deck plate, where potential inelastic deformations are allowed, and for lifting, where a high factor of safety is compared to ultimate strength.

No stability criteria are included since stability analysis was not part of the project. The pontoons were compartmented based on experience with similar systems.

2.2 Detailed Design Loads

The primary criteria from a structural design point of view are the connector loads. Since the prototype system can be assembled in many different arrangements of test beds, it is not inherently obvious which combination of units and wave directions produce the worst load case. Therefore, many cases were considered, and the results were summarized in three tables — one for the rigid connectors, one for the flexible connector, and one for the pontoon-to-pontoon connectors. These tables include loads for different test bed arrangements, operating and survival seas, and varying wave directions.

While it is possible to choose the controlling wave load case from these data, the selection of the connector design load is not that simple. In addition to the wave load, hogging and sagging loads result from deck load arrangements. To determine the actual controlling design loads at each section, the hogging/sagging loads were calculated and added to the wave loads for each case. Ultimately, there are two controlling loads for each connector, a mating load associated with the operating seastate and a mated load condition for the survival seastate.

3 R1 CONNECTOR

3.1 Background

At the start of this detailed design phase, the R1 Connector had undergone the most development work. The concept was developed by NFESC, and preliminary engineering was completed. Finite element studies had been performed and model tests completed. The scope of work for this phase was to modify the existing concept as required to meet final design load criteria and finalize the design with detailed calculations and drawings.

3.2 Connector Description

The connector was originally shown on NFESC drawings 96040001 to 96040005, which are included as Figures 3-1 to 3-5. Except for the outboard face and general sizes of elements, it was similar to the final design shown on Drawings 150 to 159 in Volume III. The connector consists of a removable steel space frame assembled from rectangular tubing sections. The frame contains one pin assembly, which is a steel pipe pin backed up by a large spring. The pin is stored in a retracted position and advanced outward by means of a lever when needed. After advancing it outward, a guillotine is set behind the pin to keep it in place. During mating, if the pin misses the receptacle on the opposing test bed, it will compress the spring, which acts as a shock absorber. In addition to the pin, a receptacle is provided that receives the pin from an opposing connector. The connectors are installed on test beds in opposing pairs, one with the pin up and one with the pin down. The connector is universal and can be installed either way. Once mating is complete, a guillotine is set in the slot at the end of the pin. This provides a tension connection, and global test bed bending moments are resisted by the couple formed by two pins.

3.3 Description of Connector Operation

Prior to mating, the connector assemblies are installed into the hulls in opposing pairs with pins facing receptacles. A separate rubber alignment pin is installed in the adjacent hawsepipe. The marriage bridle (a set of rigging described in Section 9) is attached to the pin. The test beds are placed in the water and a tug is attached to each. The pins are extended and locked in place with guillotines, and the marriage bridle is passed to the second test bed and pulled through its hawsepipe. The tugs then maintain tension between the test beds while a winch pulls the two test beds together. As the gap closes, the alignment pin will bring the connector pins to close alignment with the receptacle. If the pin misses the receptacle, it will collapse on its spring. If it engages, it will arrest relative pitch motion through bending of the pin. As the test beds move in the waves and the line keeps pulling them together, they will reach a point where the connection is nominally complete. At that point the mating guillotine is dropped, securing the connection.

3.4 Concept Evaluation

The original Government concept for the R1 Connector Assembly was basically a structural steel space frame using all steel tubing for the structural framing and standard weight 12-inch pipe for the pins. The entire assembly is removable in one piece from the test bed hull. The mating and mated loads from the pins are transferred directly from the vertical framing members to keyways in the hull structure of the test bed. This assembly structure as shown on the NFESC drawings was investigated to determine its structural adequacy for the specified design loads and the design criteria.

The design moments used for rigid connector design for this initial verification study were 2500 kip-ft and 850 kip-ft for the mated (Seastate 5) condition and the mating condition, respectively. These loads were several times those used in the concept development. The results indicated that the demands on the stabbing pins, the front and rear end plates for the acceptor and donor barrels, and most of the tubing members significantly exceeded the allowables. The tubing members were found to be unsuitable for use as bearing keys due to the high bending, shear, and buckling problems for the large design forces. Due to the restricted space requirements, the R1 Connector Assembly cannot be simply scaled up to accommodate the larger members that would be required for these forces. Therefore, it was concluded that the framing system provided as the basis of the government concept was not acceptable for the higher design loads. However, the functional part of the concept, including the pin arrangements and removable assembly, could still be retained.

3.5 Optimization Studies

Since the deficiency in the original design was in structural capacity, a series of studies was performed to investigate alternative ways to transfer the loads while maintaining the basic functional arrangements. In order to correct the structural deficiencies, the following general steps were taken:

- Higher strength steel was used for the pins. 70 ksi yield stress material was selected as a maximum that would be readily available in pipe.
- The configuration of the outboard load carrying frame was changed to more efficiently transfer local pin bending and pin axial loads to the hull. This resulted in a heavy vertical beam with holes for the pins.
- Higher strength steel was used in the outboard load carrying frame. 90 ksi was selected based on current structural practice.
- With this system the remainder of the frame serves only to support the pins and guillotines and is very lowly stressed.

The resulting load-carrying system is a shallow vertical beam spanning two bearing plates attached to the sides of the beam that engage the hull. This is shown schematically in Figure 3-6. The flanges are two heavy plates with holes for the pins. A web connects these plates to form the beam. The pins pass through these plates, transferring bending load to the beam by direct bearing on the flange. The flanges are subject to bending and, also, very high tension stress at the pin hole due to the severely reduced net section. To

transfer pin axial loads (after mating is complete), bearing plates are welded to the frame at the pin center line. These bearing plates transfer the load directly to the hull slots. Because of the simple, direct load transfer mechanism and the elimination of tubing members at this region, there was enough space to accommodate a larger pin for the increasing design loads. The higher strength of steel materials was also considered in the studies in order to minimize structure and save as much space as possible.

After several loading evolutions for the R1 Connector Assembly, the design loads were finally settled at 6440 kip-ft and 2300 kip-ft for the mated (Seastate 5) condition and the mating (Seastate 3) condition, respectively. These final loads are almost three times larger than those used in the initial verification study. Consequently, these loads exhaust the original width limit of 2 feet for the assembly, even using steel materials with strengths of 70 ksi and 90 ksi for pins and plates, respectively.

In order to resolve this problem, two alternate concepts were investigated. The first concept involved a square pin. A key benefit of using a square pin is the freedom to choose any size pin and any plate thickness. This is because a square pin can be a built-up section which is not controlled by the commercially available sizes such as the pipe section used for a round pin. This concept was rejected partly because of the potential difficulties in mating due to the square corners of the pin and the twisting of the test beds induced by waves.

The second concept involved the conversion of the front portion (vertical beam) of the removable R1 Connector Assembly into a built-in portion of the hull structure. The front (outboard) plate becomes the hull surface whereas the rear (inboard) plate spans across the side plates of the connector recess. The stabbing pins still can be removed from the closed-end recess. Therefore, the removable feature of the original government concept is still maintained for this version. The benefits of this version are the simple load path from the pins to the hull structure directly in lieu of the complex load transfer mechanism from the connector assembly to the hull. Consequently, this structural arrangement could accommodate larger applied loads should the loading evolution continue. Furthermore, the closed-end connector recess provides a stronger test bed structure without the compromising effects of the large recess openings at the connector locations. However, this concept was rejected because of the significant deviation from the original government concept that uses a complete removable connector assembly.

The final decision of this investigation was to use the modified design with the vertical beam for load transfer. The beam depth and system width were modified as necessary to carry the specified loads.

3.6 Final Design

3.6.1 Connector Description

The final R1 Connector is shown on Drawings 150 to 159. The basic concept is shown in the original concept drawings, except for the pin support structure described above. Other changes include the addition of handle details, guillotine releases, additional bracing in

the frame, modification for strain gages, and provision for a displacement measuring device.

3.6.2 Pin and Receptacle

3.6.2.1 Design Description

The pin assembly is shown on Drawing 153. Except for its size, the pin assembly is essentially the same as originally configured. Modifications include the addition of a spring support flange internally to leave a spring-free space for strain gage wires, the addition of strain gage protection, and the provision of a tube instead of a bar as a spring retainer to allow the strain gage wiring to be routed out the back of the assembly.

Design of the pins is controlled by local bending induced during the mating operation. Due to the required tolerances between pins and receptacles, it can be shown that only one pin carries the entire mating moment. This places a large demand on the pin and, with 70 ksi yield material, results in a 16-inch-outside diameter by 1.625-inch wall pipe. This pipe is the heaviest of this size that can be procured and was selected as the limit. Note that due to the small quantities involved for this project, it is anticipated that the pin will be fabricated from plate.

In order to use a complete removable connector assembly similar to the original government concept for the R1 Connector, the connector width must be increased by 2 inches to 26 inches to accommodate the stabbing pins of 16-inch minimum diameter and leave enough net section on the vertical beam to carry the load. The depth of the beam is also increased to 14 inches. These changes require the recess in the hull to grow from 2 by 6 feet to 2 feet 2 inches by 7 feet, which impacts hull design. A steel plate structure with a heavy front portion as a vertical beam as described above is able to handle the design loads of 6440 kip-ft and 2300 kip-ft for the survival mated condition and the mating condition, respectively. Since all the major loads from the stabbing pins are resisted by the vertical beam system and are transferred to the hull structure through the attached bearing keys, light tubing members can be used for the frame in the rear portion of the assembly. The primary function of this light frame structure is to handle the lifting loads, to support the weights of the miscellaneous items, and to support the spring loads from the stabbing pin during mating.

3.6.2.2 Design Data

The following data were used in the final design of the R1 Connector Assembly:

1. Structural Steel Materials:

- Steel Pipe for Pins - API 5LX-Grade 70, ASTM A656-Grade 70, or ASTM A852.
- Structural Steel Plates - A572-Grade 50 or A514-Grade 90 where needed.
- Rectangular Steel Tubing - A500-Grade A.

2. Loading Data

The design loads of 2300 kip-ft for the mating condition and 6400 kip-ft for the survival mated condition for the R1 Connector were obtained from NFESC. It should be noted that the operating mated condition for Seastate 3 is not critical because of the one-third allowable increase over the values for the survival mated condition. Therefore, only the survival mated condition and the mating condition were considered in the final design.

3. Allowable Stresses

The basic AISC allowables plus a one-third allowable increase were used for the mating and the survival mated conditions. However, an allowable bending stress of 0.75 Fy plus a one-third increase were used for the design of the pipe section of the stabbing pin as per Section 3.2.3 of API RP2A.

3.6.2.3 Design Summary

Based on the final concept and using these data, the major structural elements of the R1 Connector Assembly were designed. The connection design was controlled by the longitudinal condition, which produces the controlling forces. The design results for the major structural elements are as follows:

1. Stabbing Pins

It was found that the size of the pins is governed by the mating loads. Even with a steel strength of 70 ksi, a pipe size of 16-inch Schedule 160 (1.593-inch wall thickness) was required for the combined bending and localized stresses. This compares to the standard weight (0.5-inch wall thickness) shown in the original concept. The stresses include localized stresses in the pipe that are induced at the contact point with the edge of the bearing barrel by the applied mating bending moment. Even with the receptacle length increased from 12 to 14 inches, the localized stresses still contribute about one-fourth of the total resulting stresses. The total resulting stresses were computed at 76 ksi, which is about 8% higher than the allowable stress of 70 ksi for this situation. Since the computation of the localized stresses was conservative, the design was considered to be acceptable.

2. Receptacles and Vertical Beam

The pin reaction structure or vertical beam is included in the frame assembly shown on Drawing 151. The front and rear end plates together with the web form a vertical beam system to resist the bending moment from the pins during mating. The connection moment in the mated condition is resisted by a couple formed by the horizontal forces at the center of the tension pin and the opposing edge of the hull. The thickness of the front and rear end plates was governed by the mating condition. Even with a steel strength of 90 ksi, 1.5-inch thick plates were required due to the large mating moment of 1150 kip-ft per pin and a small resisting couple arm of 12 inches formed by these two plates. The resulting local stresses in the plates such as net tension, tearing shear, and compression were found to be below the allowable levels. The bending and shear stresses in the vertical beam section

formed by these two plates and the 1-inch web plates were also found to be within the allowable limits.

3. Bearing Plates

The basic dimensions of the bearing plates are 1.5 x 7 x 8 inches. The actual length of the plates was increased from 8 inches to 14 inches, with tapered ends at top and bottom to ease installation. The thickness of 1.5 inches was found to provide adequate bearing for both mating and mated conditions.

3.6.2.4 Investigation of Mating Transition

A principal assumption used in this design is that the pin is fully engaged and moments are resisted by the two flanges as shown in Figure 3-7. This means that the pin is at least 14 inches into the hole. This may or may not be reasonable depending on the relative module motion and response period. However, if the system were to be designed for the minimum engagement at which binding occurs (4-5 inches depending on pin/receptacle tolerance), the flange plates would be unreasonably thick (i.e., the receptacle frame would approach being solid).

Ultimate pin reactions at full engagement were used to design the structure for partial engagement. This results in a structure that will not fail when the pin is near full engagement and a system that has an ultimate capacity close to the pin design capacity at smaller partial engagements. The process followed is described below.

1. Find the ultimate pin reaction R_u for the fully engaged case, which is a function of the critical failure section. In the case of the R1 Connector it is net section tearout of the flange at the hole as shown in the figure.
2. This ultimate reaction R_u is then applied at various positions of partial engagement, and secondary stiffeners or other elements are added as required to provide capacity to match. Yield stress rather than ultimate stress is used in designing these elements to ensure that local elements do not fail prematurely. Since the controlling element is still the flange in tension, the ultimate pin moment M_{yp} for the partially engaged case is R_u times the depth D.

In this way, the secondary structure will not fail when the pin is nearly engaged but not quite all the way in. When the pin is engaged only a short distance, the capacity is not equal to the fully engaged case. However, even when only half-way engaged the capacity is high. For example, if D is 7 inches (half-way in) the partially engaged system ultimate capacity is 1,000 k-ft versus the design value of 1150 k-ft with failure due to tearout of the main flange, as in the design case. If the connection is subjected to the maximum design load at this condition, failure could occur.

3.6.3 Guillotines

Initially, a single guillotine was considered for the R1 Connector. In order to produce a tight fit after mating, the guillotine was tapered and fit into a tapered slot in the pin. To avoid having to index the pin to orient the tapered slot, the system was modified to use

two guillotines. The guillotines are shown on Drawing 155 and consist of two assemblies, outboard and inboard. Operationally, the outboard assembly is set first, then the inboard. The outboard assembly has a tapered upper surface, but when it is set in the pin groove the parallel surface bears against the groove. With only this assembly in place there is substantial play in the system and the connection "rattles." The outboard guillotine is automatically dropped, as described below, so that crew members do not have to be near the connection during initial mating. After it is set, the connection is secure and the crew can manually set the inboard guillotine. This guillotine has a tapered surface to match the outboard guillotine and to wedge the connection tight.

Once both guillotines are set, they are held down with bolts installed on the guillotine handles.

The design of the guillotines assumes that the load is transferred in pure shear and the shear area provided is adequate. The shear members at the sides are heavy to carry the shear load, but the horizontal connecting element is light to minimize weight. Thus, there is very little restraint to keep the vertical legs from twisting under the eccentric bearing loads. The practical result is that the leg will twist, concentrating bearing load in a very small area adjacent to the shear plane. This may result in some minor compression distortion but should not impact the serviceability of the connector.

3.6.4 Mechanism Support Frame

The mechanism support frame is shown on Drawing 151 and serves to support the advance/retract mechanism, the guillotine release mechanism, the guillotines, and the roller assembly. The frame is constructed of small rectangular structural steel tubing. Loads are generally low so members are small and lightly stressed. The frame is braced where possible to provide a general robustness for handling and storage. Lift points are included at the center of gravity of the entire assembly, which is just inboard of the pin frame.

3.6.5 Extend/Retract Mechanism

The extend/retract mechanism is shown together with the pin support rollers on Drawing 154. The system is essentially as provided in the conceptual design with some minor modifications to improve efficiency and accommodate the higher forces associated with the heavier pin. When the pin is in the retracted position the rollers minimize the force required to move it forward. However, when fully engaged, it cantilevers from the frame and tends to bind in the frame, which results in an estimated friction force of 600 pounds on the pin. With the mechanical advantage of the lever and pipe handle, this reduces to 150 pounds at 4 feet above the deck. Since there are two handles, two people should be able to retract the pin and be within the Navy guidelines of 80 pounds per person.

3.6.6 Guillotine Release

The guillotine release is shown on Drawings 157 and 158. The release systems are different for the two guillotines. The outboard release is automatic to allow the guillotine to set without personnel having to be in the vicinity. It consists of a spring-loaded plate

that slides on the support frame. When the guillotine is raised it self-cocks. When the mating pin is far enough in the hole for the guillotine to engage, it trips the release, allowing the guillotine to fall under its own weight. An override system is provided in the form of a cable reaching to the deck. If the system is cocked and the guillotine needs to be lowered, this cable can be used to release the guillotine. When the connector is upside-down, a bar can lever the plate back by prying against a frame cross member provided for that purpose.

The second guillotine is held up by a simple prop when the connector is oriented as shown. It can be tripped manually or remotely by use of a lanyard. When the connector assembly is upside-down, the second guillotine will be set in place by hand after the first one has set.

Since the assembly can be in either orientation, pin up or pin down, two sets of rods are provided to connect the handles to the guillotines. The guillotines will have to be reconfigured if the orientation is changed.

3.6.7 Alignment Pin

The alignment pin resides in a separate hawsepipe but is part of the R1 connector system and is used when pulling test beds together. The alignment pin design is unchanged from the original concept. However, the details of the rubber grade were modified slightly based on conversations with Trellex Fender, a major supplier of fenders to the marine industry. The L11 designation originally shown is no longer used, having been replaced by EA14. C12 relates to ozone/weather resistance and is appropriate in this application. Gll is tear-resistant, which is obviously important in this application. They suggested keeping the grade open to both 620 and 720, 620 being more common.

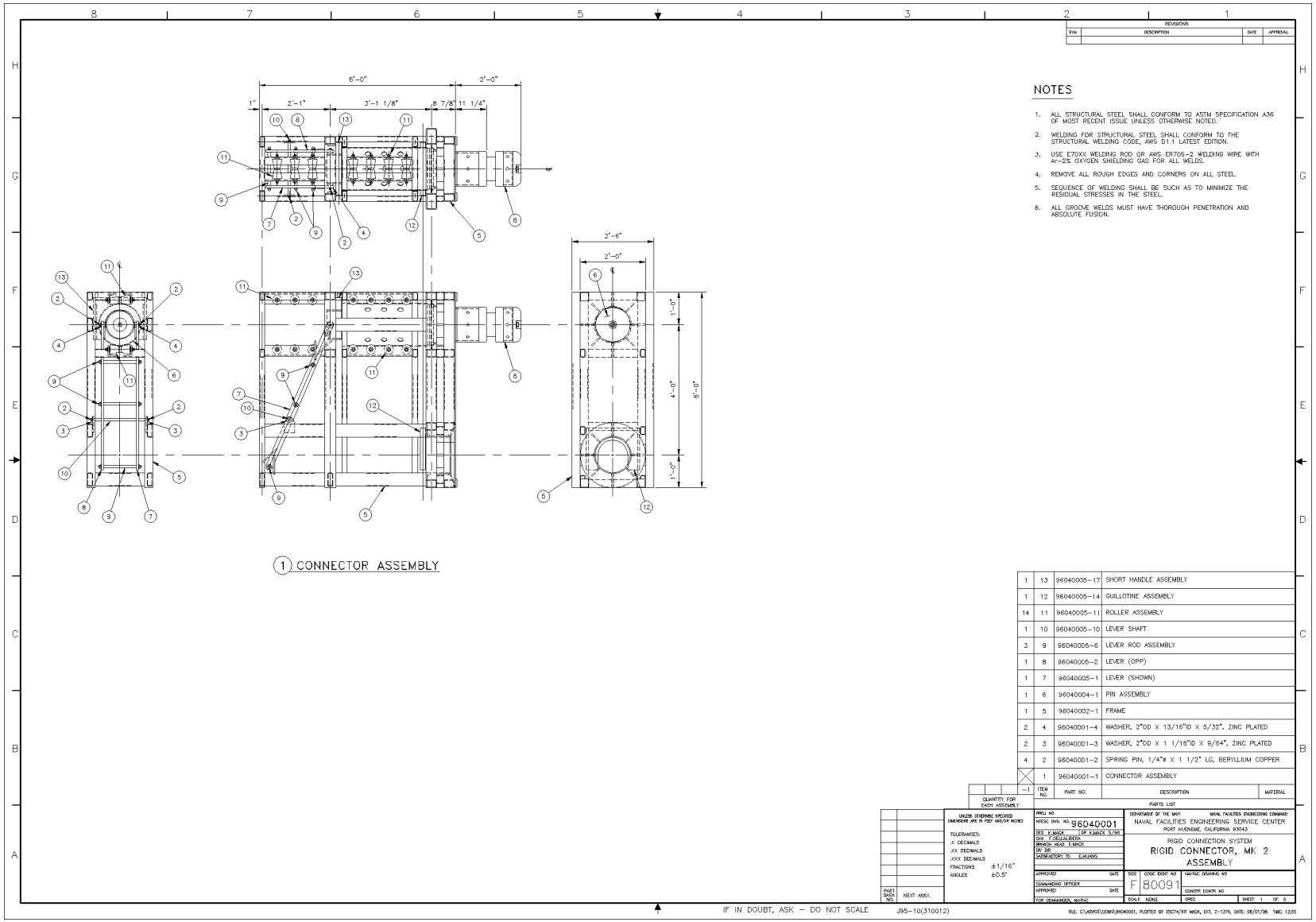

Figure 3-1. Original R1 Concept - Sheet 1

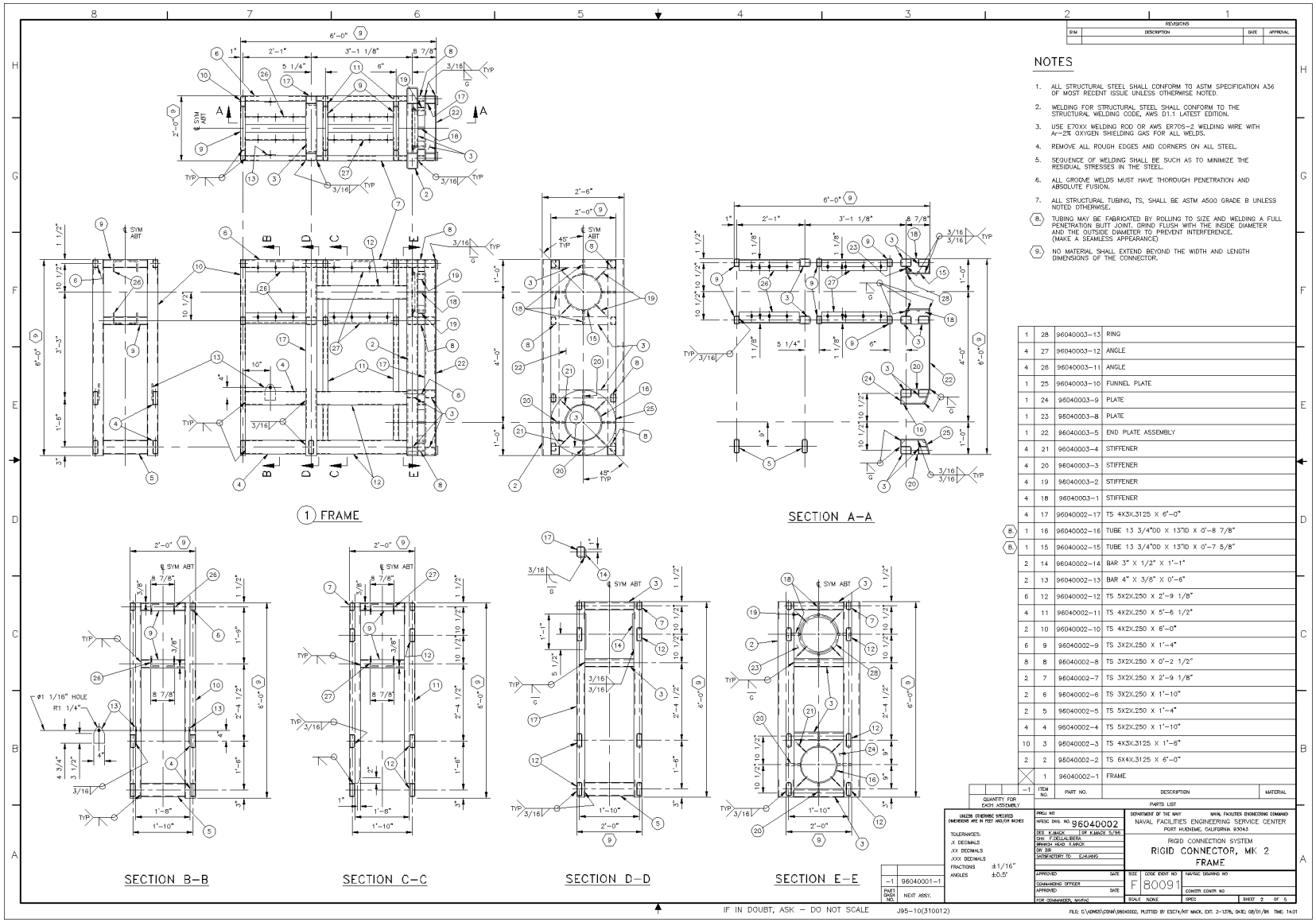

Figure 3-2. Original R1 Concept - Sheet 2

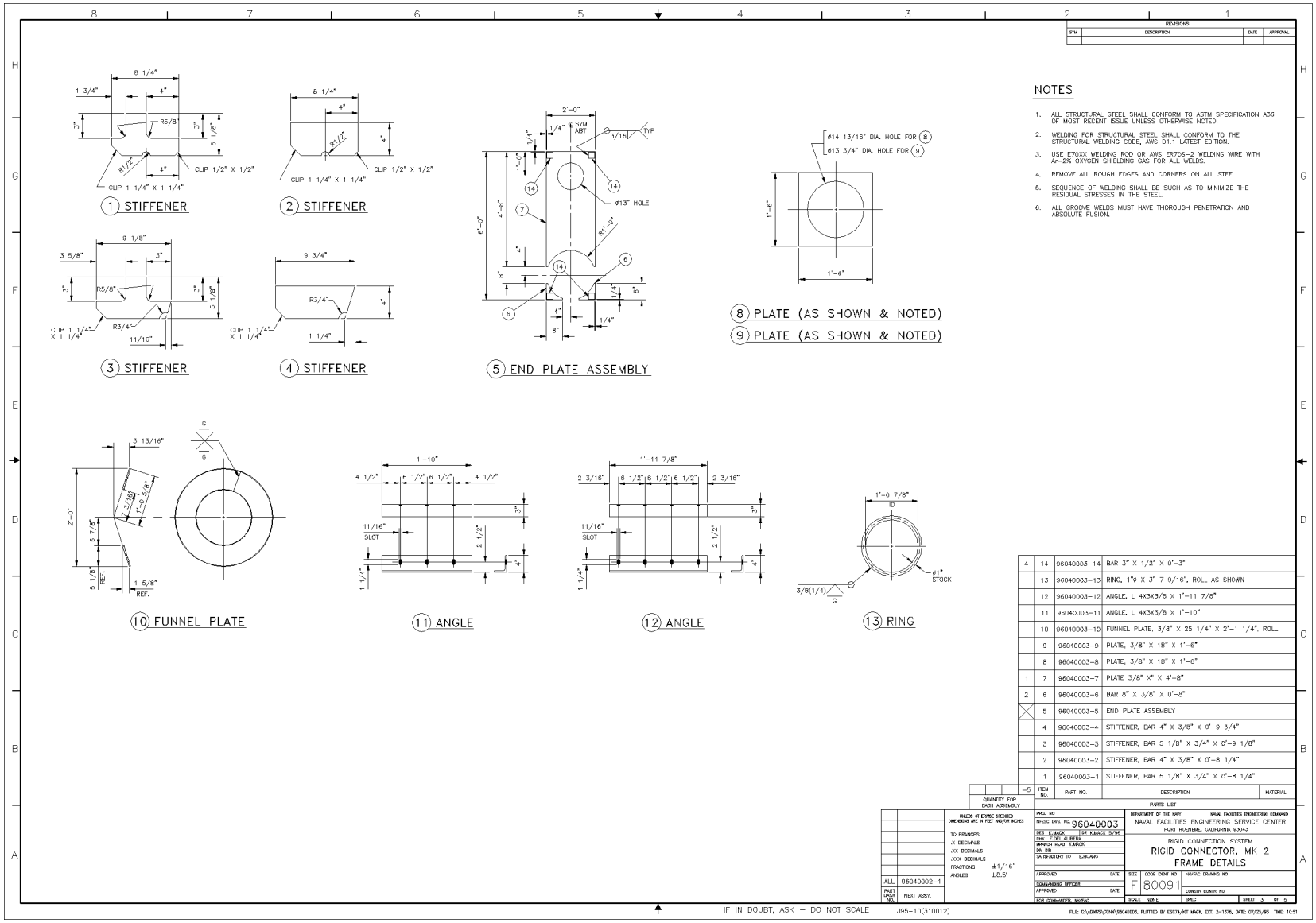

Figure 3-3. Original R1 Concept - Sheet 3

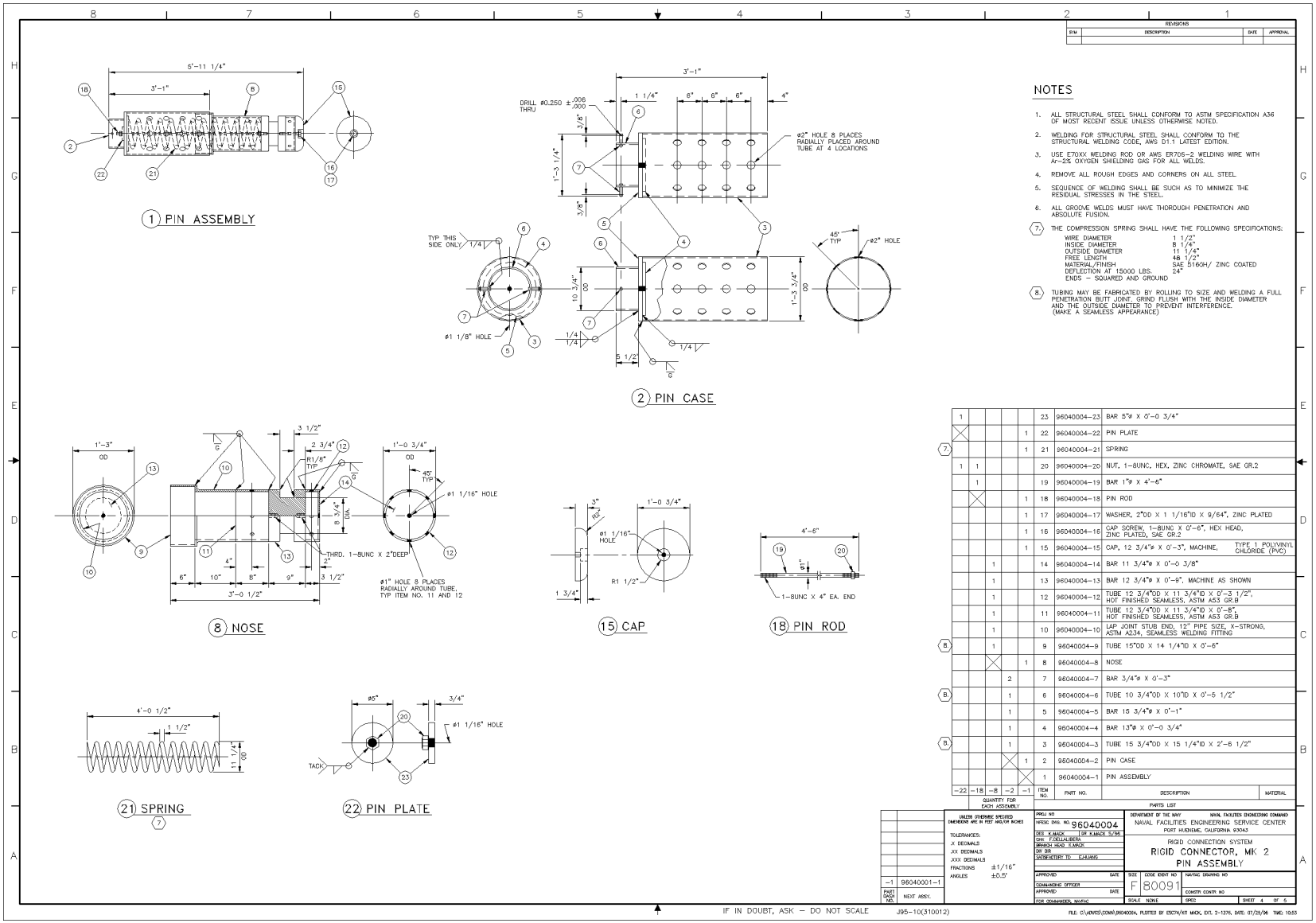

Figure 3-4. Original R1 Concept - Sheet 4

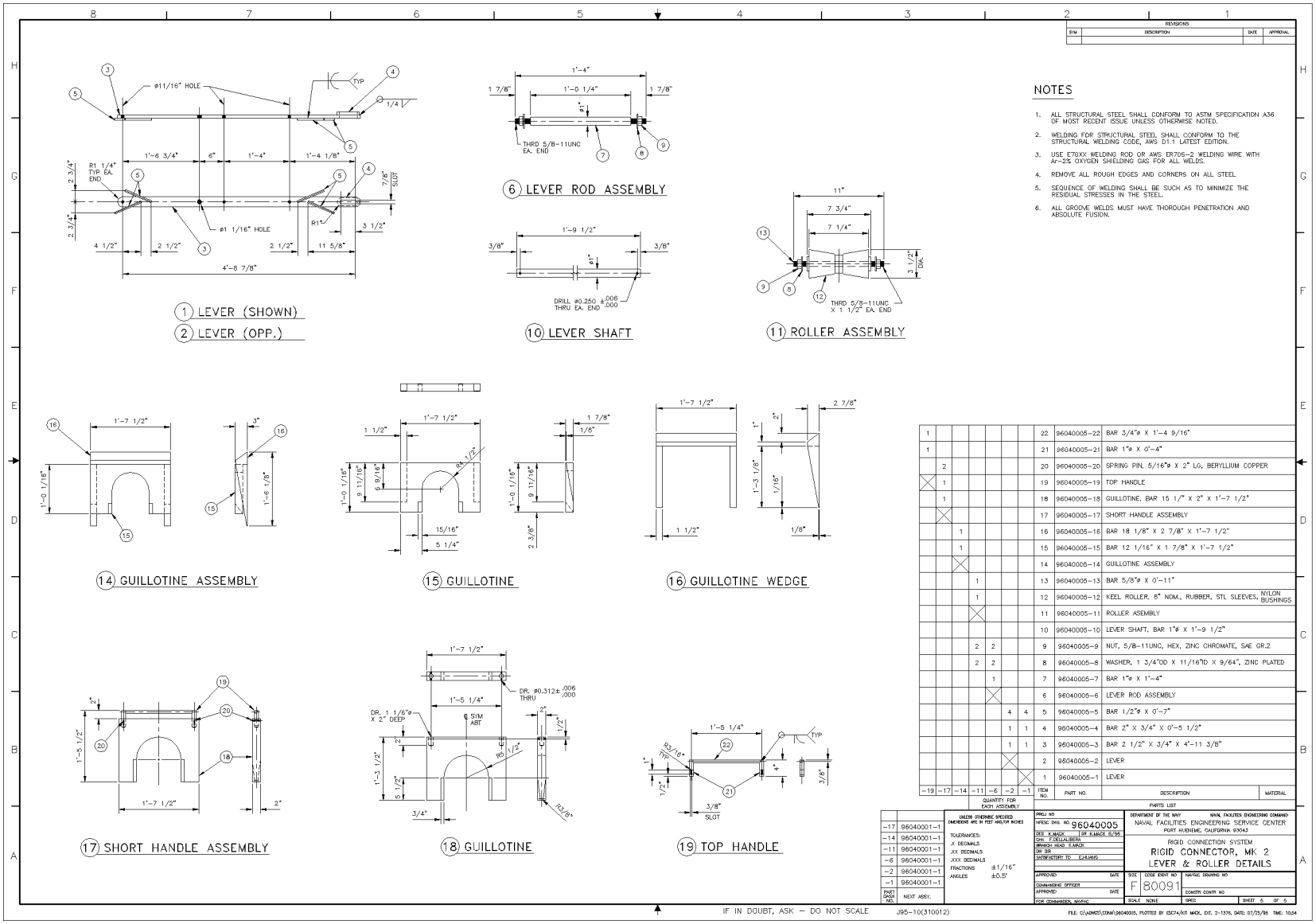

Figure 3-5. Original R1 Concept - Sheet 5

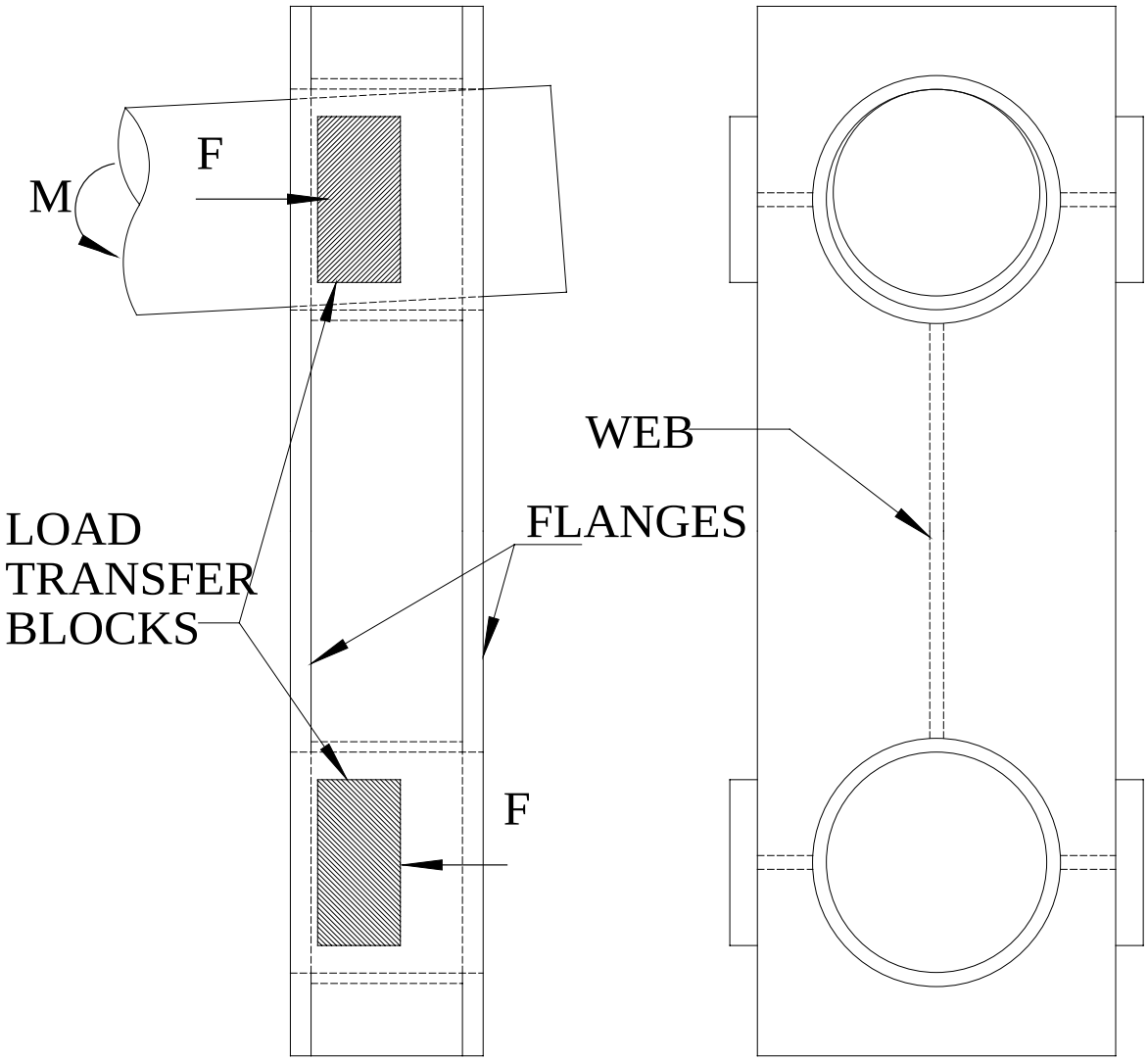

Figure 3-6. R1 Pin Load Transfer System

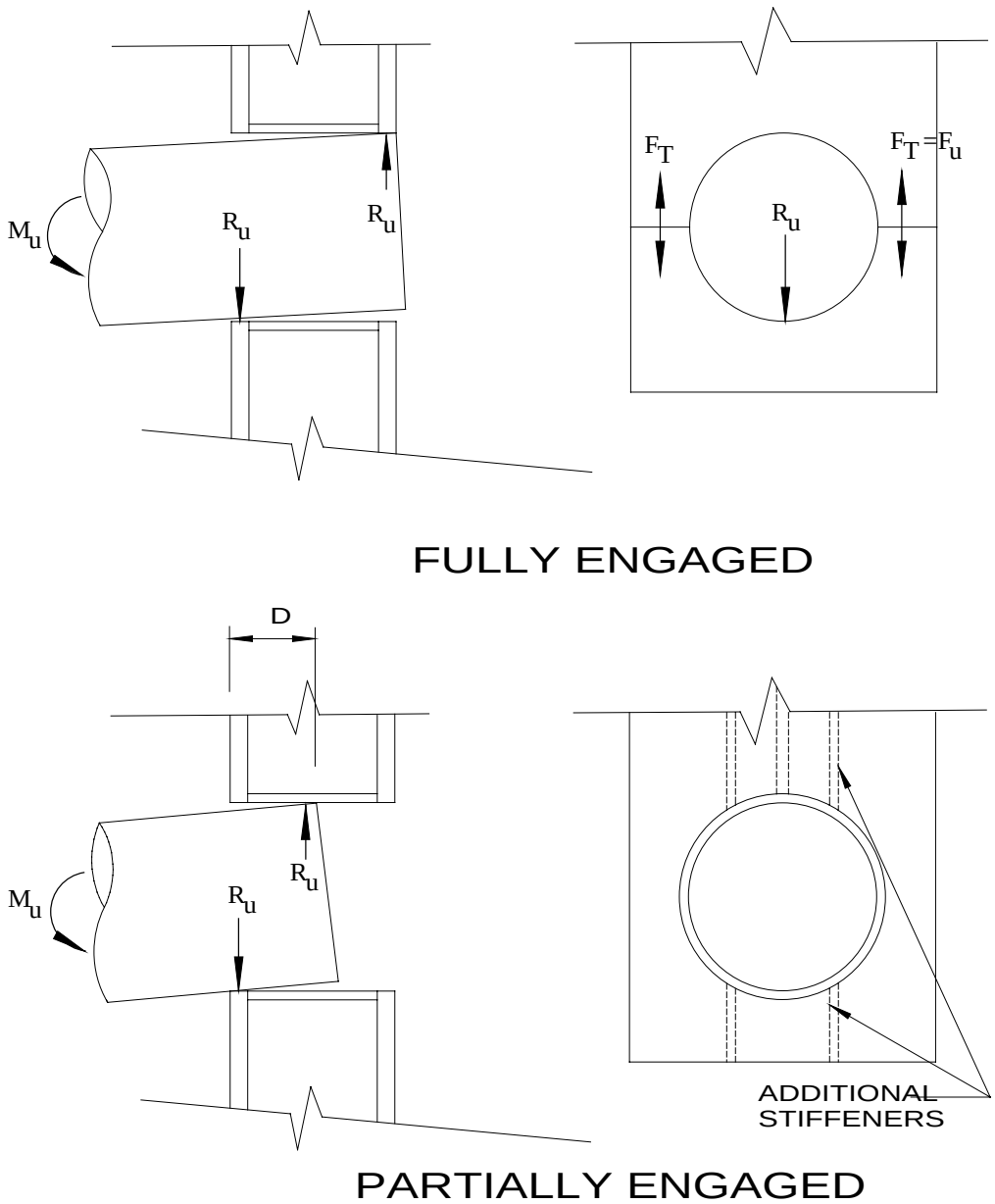

Figure 3-7. R1 Partial Pin Engagement

4 R2 CONNECTOR

4.1 Background

At the start of this detailed design phase the R2 Connector was still in a concept development phase, so the first task was to finalize the concept. The connector structure at that time consisted of a large lower pin that engaged the opposing hull when mating and a smaller upper connection that would be made up on deck after the lower pin was engaged and locked. The mating procedure included using soft lines to bring the connection together at the top as the test beds moved. The study concluded that the connector structure could be nominally as shown, but the procedure could be modified to eliminate the soft lines at the top. In addition, the R2 Connector does not have any inherent energy absorption as with the R1 spring. A contingency fender system was suggested for use with the R2 Connector design as required by test experience.

4.2 Connector Description

The R2 Connector is shown on Drawings 160 to 165 and 170 to 174. Conceptually, the connector is similar to the R1 Connector in that a single pin will take all the mating load and transfer this bending moment to a vertical beam for transfer into the hull. The principal difference is that the vertical beam is built into the end of the hull and the connector is not unitized. Since only one pin will carry load at a time during mating, only the lower pin is extended at this time. Thus, only one of the two pins must be designed for the high bending moment imposed by mating. The second (top) pin is installed after mating is complete and serves to increase the connection capacity for the survival seastate.

The lower pin, which is used for mating, is a rectangular pin in a matching hole through the vertical beam built into the end of the hull. In the mated condition, this pin acts in tension, forming a couple with the bearing pads at the top of the hull to resist bending that produces pin tension. Behind the pin is the hawsepipe, which serves to store the pin and transitions to a round pipe to deck for the marriage bridle. This connector is different from the R1 Connector in that the end of the R2 lower pin has the rubber alignment pin built in and alignment is done directly at the pin. Behind the vertical beam is an enclosed guillotine slot. The single guillotine is permanently installed and has reach rods to the handle/release mechanism at the deck.

The upper pin is a smaller rectangular pin located just below the deck. This pin is designed to take only tension, forming a couple with the bearing pads at the hull bottom to resist bending that produces pin tension. The pin load is transferred in tension with small guillotines which are set after the lower guillotine is placed.

A significant difference between the R2 and R1 Connectors is that the R2 Connector does not have the energy absorption capability provided by the R1 pin spring. Thus, to protect the hull from collision damage during mating, temporary fenders are installed hanging

over the deck edge. They are removed as mating takes place to allow the connectors to be latched.

4.3 Description of Connector Operation

The marriage bridle legs are rigged to the rubber end of the lower pin. Pulling lines are rigged through the receiving unit's hawsepipes with the outboard end accessible up on deck. Prior to mating, the lower pins are extended from the donor unit, and the guillotines on that side are set. The pins are extended by pulling on the pins with a boat or during the early stages of the mating operation. During extension the guillotine is pulled up and then rests on the top of the pin once the pin has been extended to where the steel pin is under the guillotine. The guillotine then drops into its slot as the pin is pulled on out. The upper pins remain stowed. The guillotines are raised and the release mechanism cocked on the receiving unit. The fenders are installed by hanging them over the edge with soft lines tied off to deck anchorages.

During mating the tugs maneuver the units into position and the marriage bridle legs are passed to the receiving unit and made fast to the pulling lines. The marriage bridles are then pulled on board and reeved to the tensioning winch. The test beds are then pulled together while the tugs maintain controlled tension. Once the alignment pins enter the receiving hawsepipes and the connection is imminent, the fenders are pulled back on deck and the test beds pulled together. As soon as the deck edges make contact, the guillotines are released. Note that if the gap is still too large for the guillotine to engage, the guillotine will rest on the pin and drop into place when the slot appears during the vessel motion cycle. Once the guillotine drops, the connection is secure and deck personnel can approach the edge. The two mating guillotines may have to be adjusted slightly to even out their engagement. This is done by raising one with a bar while letting the other seat to take up the slack. Once the lower guillotines are adjusted, the upper pins are extended and its guillotines set. The upper pins are extended by working a bar through a small hole in the deck.

4.4 Configuration Development

The R2 concept, as defined after the concept selection phase, consists of a large bottom pin that serves for both the mating and mated conditions and a smaller top pin installed for the mated condition only. Similar to the R1 Connector, these pins are supported by a vertical beam. In this case the beam spans directly between the bottom and top decks. The lower and upper pins can be removed for maintenance and to configure test beds for different mating arrangements. Initially, these two pins did not line up vertically so that guillotines would not interfere. However, this was modified by configuring the lower guillotine handle and release mechanism around the upper pin and connector. Since the lower guillotine is set first, it will be out of the way when the upper pin and guillotines are installed. The resulting vertical beam is considerably more efficient in structural weight and space occupied.

The lower pin will resist all the mating loads, whereas the upper pin will participate in resisting the mated loads only. The design moments used for the verification were 6400

kip-ft and 2300 kip-ft for the mated (Seastate 5) condition and the mating condition, respectively, for both rigid connectors. Calculations indicated that that the size of the rectangular lower pin could be reduced to 10 by 18 inches from 12 by 26 inches if 90-ksi high-strength steel were used. Since this grade steel is already required for the R1 Connector, it was used here also. The rectangular upper pin of 6 by 8 inches appears to be adequate even when 50-ksi steel is used. The proposed length of 12 inches for both donor and acceptor barrels, and thus the beam, was found to be sufficient.

4.5 Final Design

4.5.1 Lower Pin and Receptacle

4.5.1.1 Design Data

The following design considerations were implemented in the final design of the R2 Connector Assembly:

1. Structural Steel Materials:

- Steel Plate for Lower Pins - A514-Grade 90.
- Structural Steel Plates - A572-Grade 50 or A514-Grade 90 where needed.

2. Loading Data

The design loads of 2300 kip-ft for the mating condition and 6400 kip-ft for the survival mated condition for the R2 Connector were obtained from NFESC. It should be noted that the operating mated condition for Seastate 3 is not critical because of the one-third allowable increase over the values for the survival mated condition. Therefore, only the survival mated condition and the mating condition were considered in the final design.

4.5.1.2 Design Summary

Based on the final concept and design considerations described above, the major structural elements of the R2 Connector Assembly were designed. The design results for the major structural elements are as follows:

1. Lower Pins

It was found that the size of the pins was governed by the mating loads. A pin size of 8 x 18 x 1-inch thick is adequate for steel with a yield strength of 90 ksi . A center web was added to limit local yielding and crippling in the pin webs and the bearing stresses in the contact areas to the allowable values.

2. Upper Pins

The survival mated load of 6400 kip-ft per test bed controls the design because these upper pins participate in resisting loads only after the completion of mating. The resulting

axial load per pin is 454 kips for which a structural steel tube of 6 x 8 x 1/2 inch-thick with yield strength of 50 ksi is sufficient.

3. Front and Rear End Plates

The outboard and inboard hull plates together with two webs form a vertical beam system to resist the bending moment from the pins during mating and the horizontal force couple applied at the center of one barrel and the upper or the lower edge of the hull after the test beds are mated. The thickness of these plates was governed by the mating condition. Even with the use of 90-ksi steel, 1-inch-thick plates were required due to the large mating moment of 1150 kip-ft per pin and a small resisting couple arm of 11 inches formed by these two plates. The local stresses in the plates such as net tension, tearing shear, local yielding, and crippling were found to be acceptable. The bending and shear stresses in the vertical beam section formed these two plates, and the 3/4-inch web plates were also found to be within the allowable limits. The top deck in the region of the connector is 0.75 inch to account for the notch formed for the guillotine slot. Since the bottom has no notch, the plate there is 0.5 inches thick.

4.5.1.3 Investigation of Mating Transition

Similar to the R1 pin, a principal assumption used in this design is that the pin is fully engaged and moments are resisted by the two flanges, which means that the pin is at least 12 inches into the hole. This may or may not be reasonable depending on the relative module motion and response period. However, if the system were to be designed for the minimum engagement at which binding occurs (4-5 inches depending on pin/receptacle tolerance), the flange plates would be unreasonably thick (i.e., the receptacle frame would approach being solid). If the connection is subjected to the maximum design load at this condition, failure could occur.

The partial engagement case was considered in a similar manner to that of the R1 Connector. However, in this case the local load transfer within the vertical beam for the partial pin engagement case is by means of a center web plate above and below the receptacle.

4.5.2 Guillotines

Unlike the R1 Connector, the R2 has only one guillotine per end. This is because since the section is rectangular there is no penalty for having the tapered slot. Having only one guillotine simplifies the system significantly. However, there is no automatic guillotine release mechanism since it cannot be conveniently built into the hull. Since the guillotine will be tripped manually by deck personnel without a good view of the condition at the pin level, the tolerance for guillotine engagement needs to be as large as possible. Tolerance is provided by making the slot as wide as possible and the guillotine tip as narrow as reasonable, which results in a heavy guillotine.

The design of the guillotines for both the upper and lower pins was governed by the survival mated loads of 555 kips and 454 kips for the lower pin and upper pin, respectively. The design of the guillotines assumes that the load is transferred in pure

shear and the shear area provided is adequate for this shear. The shear members at the sides are heavy to carry the shear load, but the horizontal connecting element is light to minimize weight. Thus there is very little restraint to keep the vertical legs from twisting under the eccentric bearing loads. The practical result is that the leg will twist, concentrating bearing load in a very small area adjacent to the shear plane. Since the bearing length is considerable in the R2 Connector, these local stresses should not result in any compression distortion.

4.5.3 Guillotine Breakout/Lift and Release System

The guillotines are buried deep in the hull structure and are operated from the deck level. The simple handle was modified to fulfill several functions. In addition to serving as a handle, it also serves as a means to apply large forces to break out the guillotine after it has been engaged, a means to lever it up an inch at a time, and a release system.

The system is shown on Drawings 172 to 174 and consists of reach rods from the guillotines up to a frame that serves all these functions. The basic frame consists of two uprights, a bottom member to attach the reach rods and a handle at top. The breakout capability is provided by lugs that extend outside the frame boundary. Pry bars can be placed under the lugs to lever the frame up. As it comes up, the frame is prevented from falling back by a pawl that engages these lugs and intermediate lugs as they pass. The frame and guillotine, therefore, can be raised in a slow,controlled manner. Depending upon the seastate during disconnection, binding forces can occur any time during the process. Due to the weight of the entire assembly, this system will most likely be used to lift the assembly in all circumstances.

The release mechanism is a simple trip-type unit located on the opposite side of the frame from the pawl. It is engaged when the frame is at full height and tripped remotely by use of a lanyard. Once the guillotine is set, it is held down by bolts from the handle to lugs attached to the sides of the recess.

4.5.4 Fenders

Since the R2 Connector itself has no energy absorption capability, fenders are provided. They must be removed during the mating process by personnel located at a safe distance from the deck edge. The precise location, both vertical and horizontal, will be determined during the test program.

For ease of handling, in particular for pulling them out of the gap between test beds during mating, inflatable tear drop shaped units are used. The energy absorption capacity of 8 kip-ft per fender gives a system energy similar to the R1 spring. The rated capacity is available from Polyform. Similar fenders are available from other vendors. The fender is shown with a wire rope sling attached to resist chaffing at the deck edge. It will be located and held in place with soft line rigged to deck attachment points. The soft line will be provided and rigged by the test team.

5 F1 CONNECTOR

5.1 Background

The F1 Connector is based on the NFESC design developed for a previous field test of the concept (Reference 1). The connector arrangement was kept nominally as originally shown, but scaled up for the larger loads required by this project's design criteria. Mechanically, the only change was to add a bearing material, eliminating the steel-on-steel bearing.

5.2 Connector Description

The concept consists of two opposing weldments hinged together. The weldments reside in a trench just below the deck level. The trench is long enough to store the entire assembly, which consists of the hinged weldments and rubber alignment pin. The connector is shown on Drawings 140 to 145.

5.3 Description of Connector Operation

Prior to mating, the entire assembly is stored in the trench on the donor test bed, as shown in Drawing 140. The marriage bridle end segment is rigged to the end of the connector and flaked on deck. The remaining marriage bridle is rigged on the receiving test bed with the end slack and ready to pass to the donor unit. The docking bumper guillotine is set on the receiver unit to stop the connector as it comes on board.

When mating is to occur, the test beds are maneuvered into position and the marriage bridle is passed from the receiver unit to the donor, where it is attached to the end segment. The connector unit is then either shoved out with pry bars or pulled overboard with the marriage bridle. A safety line keeps the connector from going overboard and approximately locates it. The connection guillotine on the donor side is then set. If necessary, the position of the connector is adjusted with pry bars as required to set the guillotine.

At this point, the test beds are pulled together while system tension is maintained by opposing tugs. As the rubber alignment pin enters the receiver, relative motions are damped and the pin guides the connector weldment into the receiver. The alignment pin is pulled through the docking bumper guillotine until the weldment docks against the guillotine. At this point, the connection guillotine is set, completing the connection.

5.4 Connector Body Assemblies

The connector body assemblies are boxes fabricated from steel plate. The side plates extend at one end to form the mating elements of the horizontal hinge. The general arrangement is the same as shown on the original NFESC drawings except for the addition of a closure plate in the back to complete the box, providing a torsionally

complete system. The dimensions and plate thicknesses have been increased as required to carry the proscribed loads. The primary load carrying elements are 50-ksi yield strength steel.

Axial tension/compression is resisted by the box transmitting the loads from the pin to the guillotine slot and from there to the guillotine. The guillotine slot on the weldment is reinforced with vertical plates that carry the loads from the flanges to the guillotine. On the receiver weldment, these plates extend out the back to provide the docking surface which lands against the docking guillotine.

Bending moments produced by vertical hinge pin shear load is resisted by the couple formed by the transverse plates at the two ends of the connectors. These reactions plus the reaction due to shear are resisted by hardpoints in the hull receiver housing which coincide with these plates.

Since the connectors have a loose tolerance in the receiver, they can twist when subjected to torsion loads. When the two opposing test beds twist, the hinge pin axis remains at a neutral position and the connector is subjected to torsion. This torsion is resisted by the connector assembly box and results in concentrated reactions at the corners of the transverse plates. With the closed box construction, the torsional strength is high and torsional stresses are low.

The hinge is formed by reinforced plates on one side and a sleeve on the other. The side plates are capable of carrying the lateral bending produced by transverse shear. The sleeve supports the bearing material and must be kept from ovalizing. For this reason the sleeve is reinforced with a series of radial stifffeners.

5.5 Pin/Bearing

The pin and bearing arrangement consists of a high-strength steel pin which is fixed in a steel-to-steel bearing on the outer plates and turns in a lined journal bearing in the center sleeve. The pin is indexed to the outer plates to keep it from turning.

The loads on the pin are high and require the use of high-strength steel (150-ksi yield) in order to maintain a reasonable pin size. With the resulting pin size, the holes in the weldments are small enough so that the weldment plates will not fail in tearout for the prescribed loads. On the other hand, the pin is large enough that the pin bearing stress on the journal bearing are within allowables.

Design of the F1 Connector bearing is driven primarily by the high normal loads carried by the connector pin. Peak loads are expected to be about 346 kips. The size of the pin, which is limited by the connector geometry, yields a bearing area of about 20 square inches. The resulting normal stress of about 17,000 psi limits the choice of suitable materials to the composite bearing category, which typically has allowable loads up to 60,000 psi.

In addition to the normal load, the bearing must also be checked for Pressure-Velocity[1] suitability. High-pressure composite bearings in this class withstand PV levels of on the order of 25,000. Based on the design wave period of 6 seconds, and the expected range of angular deflection across the F1 Connector of 25 degrees, peak rotational velocities will be about 1.7 rpm or 1.4 surface feet per minute, including some allowance for the non-constant nature of the angular motion. These conditions result in a PV value of about 22,000, confirming the suitability of the composite material. The recommended bearing then is a filament-wound, teflon-impregnated composite bearing of nominal 3-inch diameter, 7-inch length, and 1/4-inch thickness.

5.6 Guillotines

The guillotines for the F1 Connector have a similar function as those on the rigid connectors. In this case, there are two different guillotines. The docking guillotine is provided for the connector to bump against during mating. Once the connector is held in position between the line pull and the guillotine, the second connection guillotine is set. This guillotine actually carries the connection load.

The load is resisted in direct shear. Due to the looseness of the fit, it is assumed that the guillotine legs will twist and the load will be resisted in bearing on very small areas at the edge of the slots.

5.7 Pull-in Hardware

The guillotine assembly includes the rubber alignment pin and chain to which the marriage bridle connects. The alignment pin is formed from rubber and is connected to the connector by means of a recess which engages a pipe protruding from the connector. The chain is connected to the connector with a pin and extends through the alignment pin. The outside end of the chain is secured with a chain-connecting link which bears on a steel insert in the rubber pin. This holds the pin in place and provides a connection point for the marriage bridle.

[1] The Pressure-Velocity (PV) limit represents the allowable maximum of the product of the bearing pressure (in psi) and the rotational velocity (in feet per minute). At higher bearing pressures, lower rotational speeds can be endured.

6 PC1 CONNECTOR

6.1 Background

The purpose of the PC1 Connector is to connect the individual pontoons together to form test beds. These connectors will be made up on shore or on shipboard, so they do not have to sustain loads during mating and do not have to be configured to be mated on the water.

At an early stage of the project, the connectors were located based on avoiding interference with other outfitting and to optimize load paths. Due to congestion from the transverse hawsepipes and loss of length from the rake, it was decided to use four connectors. The two end connectors are located as close as possible to the end without interfering with the rake. Initially, the two center connectors were located at the R1 transverse connector bulkheads to provide a direct load path for R1 loads. However, due to congestion, especially when the R1 slot grew to 7 feet long, these were moved out one frame.

NFESC did not express any preference for the connector type since the connector is not being tested as part of the LEAD project. They provided four examples of previous connectors to serve as guidance. The intent was to avoid inventing a new connector that will eventually be provided as part of a performance specification.

Initially, one of these concepts was selected and modified to suit the geometry and loads of this project. However, in discussing the design with NFESC at the 35% review stage, it was agreed that the design resulted in a connector that was excessively heavy, required slots in the hull, complicating construction, and required close tolerances during fabrication. Also, after this review NFESC clarified that the connector could be installed from both the top and bottom, assuming the pontoons are up on blocks. With this assumption, the new connector was developed and is described in the following sections.

6.2 Connector Description

The PC1 Connector is shown on Drawings 180 to 182. The connector consists of two distinct parts — the tension compression elements top and bottom and the shear connector located mid-height. The top and bottom connector consists of bolts in direct tension that pull the pontoons into contact and resist the tension resulting from global moments and forces at the pontoon-to-pontoon interface. These bolts are in pockets accessible from the top and bottom. The bolts are installed “snug” tight. No pretension is required. The shear connector is a simple bearing block located in opposing holes in insert plates in the hull. The block is bolted onto the middle pontoon just to hold it in place. The force is carried by shear through the block.

6.3 Top and Bottom Tension Connector

The top and bottom connectors carry only tension and compression. The forces are primarily due to rigid body bending of the test bed due to transverse and quartering waves and hogging and sagging loads. Tension is carried by the bolts and compression by the two bearing plates in contact. The tension load is resisted by an insert plate in bending. This plate transfers the load back to the center web and the transverse sides of the recess. Most of the load goes directly to the center web where it is resisted in tension. The web then sheds the load into the top or bottom plate where it is transmitted by tension and shear across the test bed.

The bearing plates on the outside of the hull are meant to act as shim plates and can vary from 0 to 0.375 inches in thickness. The holes are oversized so the bolts carry tension only and not shear. The intent is that the pontoon be completely fabricated and then surveyed before finalizing the shim thicknesses. This is discussed more completely in the section on tolerances.

6.4 Middle Shear Connector

The shear connector consists of a shear plate located in opposing holes in insert plates in the sides of the hull. The holes are covered on the interior face. The shear connector is located at mid-height to avoid interference with the top and bottom connectors. The intent in this case is to not weld in the insert plates until the pontoon is complete. Then the location of the plates will be precisely surveyed and the plates installed. Three of the four connectors transfer load only vertically so only the location of the top edge of the opening is critical. The fourth connector transfers load in both vertical and horizontal directions, and therefore, in this case, both axes must be located closely.

The thickness of the block and insert plate is set so that with a gap tolerance of 0 to 0.75 inches the block will always maintain a 1.25-inch minimum bearing. The dimensions of the insert plate holes are different for the two pontoons. For the middle pontoon the shear block is a “tight” fit with minimal tolerance. The block on this side is square and is bolted into this hole. The bolt is intended to hold the block in place during mating but does not carry load. The hole in the outboard pontoons is larger to provide tolerance suitable for mating, and the block on this side is tapered to facilitate mating.

7 HULL STRUCTURE

7.1 Introduction

The test bed is a barge-type structure consisting of three parallel pontoons rigidly attached together. Structurally, this assemblage must support live loads, transmit connector forces between assembled test beds, resist hydrostatic loads, and resist wave loads. The individual pontoons are boxes that carry the global loads as beams in bending and shear. Hydrostatic loads, wave loads, and deck loads are carried by the local structure consisting of plate, stiffeners, and frames. The frames ultimately transfer the load into the pontoon skin as shear where it is balanced by opposing forces.

The design of the hull was approached from the local framing outwards. First a framing system was developed, then the local plate, stiffeners, and frames were designed. Next, the structure was analyzed globally, and the structure developed for local loads was checked for global stresses. Finally, the local structure in the region of the connectors was designed to transfer the connector loads into the hull structure.

In addition to the basic structure, the hull includes various structural and non-structural appurtenances such as hawsepipes, lift points, cleats/mooring rings, ladders, and hatches. These were designed after the basic design was completed and were incorporated into the basic structure.

7.2 Framing Arrangements

Since the test beds include multiple connector types, the framing is complex to accommodate the various elements. In developing the structural framing system, the R1 side pontoon was considered first since it is the most complex. It includes an R1 connector at one end, an R2 connector at the other end, and an R1 connector in the side, which requires a transverse slot almost all the way across the pontoon. In addition, there are items common to all pontoons that dictate framing arrangements. These include ISO lift point locations, water tight bulkheads, and the heavy deck load criteria.

The basic framing arrangements for the R1 side pontoon is shown in Drawings 21 and 22. Starting at the R1 end, a frame was located at the end of the connector well to reinforce the re-entrant corner formed by the well. A frame was then required at the interior ISO location, which is nominally 10 ft from the centerline. This frame location became a watertight bulkhead to satisfy stability requirements. (Note that no stability analysis *per se* was done as part of this design. The compartmentation was defined by NFESC based on previous experience). The next fixed frame location was at the side of the R1 side connector well. Next, the deck framing was reviewed relative to the high local deck load criteria. This review indicated that the span between Frames 4 and 6, which was over 8 ft, and the span between Frames 1 and 3, were too high for reasonable deck stiffening and a frame was thus added. With this addition, the frame spacings were all about 4 ft or less. This frame spacing was then made symmetrical so that deck framing was typical and the

PC1 Connectors, which were located on the frames, were symmetrical. The same frame spacing was carried through on the middle pontoon and the raked test bed pontoons.

Initially, a nominal stiffening spacing of 2 feet, which fits the 8-foot pontoon cross-section, was considered. For the deck, this spacing was too high for the high deck load, and the nominal spacing was reduced to 1 foot. On the sides and bottom, the 2-foot spacing was acceptable, but was varied to achieve continuity with major components, in particular the interface with the connectors. Thus, on the bottom at the R1 end, two stiffeners connected to the end of the connector well. This left an outside spacing of 2 feet 11 inches, which was too large. This space was then split, the inboard stiffener was aligned with the corner notch, and the outboard was made symmetrical. The inboard stiffener transitioned outward to align with the R1 side well. The same arrangement was carried through on the R2 end except that the interior stiffeners were aligned with the connector webs. The side wall stiffeners were 2 feet on center except at the bottom where an extra stiffener was added to prevent plate buckling under global load and trim the bottom of the connector well opening.

The same basic stiffener arrangement was used for the middle pontoon except it was much simpler due to the absence of connectors.

7.3 Plate Design

All hull plating was initially designed for local bending. It was then checked for global stresses. The deck design criteria is 78,400 pounds over a 26 by 32-inch area. Pressure loads assume the water level up to the deck.

At the start of the design, the criteria was to design the plate using basic allowable stresses with an allowable 33% increase for survival environmental conditions. With the very heavy local wheel load deck design criteria, this resulted in a heavy deck even when using 50-ksi yield steel. Also, initially, a 0.25-inch thickness was considered minimal to minimize fabrication issues associated with warping and subsequent straightening.

Since the weight was significantly over the target weight at the 35% design submittal, the criteria were reviewed with regard to how plate thicknesses could be reduced. It was concluded that the side walls could be reduced to 0.188 inches if one stiffener was added to the bottom space. However, in order to reduce the deck plate, the criteria had to be changed to allow the plate to yield. A steel plate structure has very large reserves against failure from pressure loads due to two-way action and the plate ultimately failing in catenary yielding. Thus, high bending stress does not necessarily imply failure, but does imply local permanent distortions. These distortions are relatively small, on the order of 0.125 inch (Reference 2). NFESC agreed to accept this criteria, and thus the basic deck plate thickness is 0.25 inch.

In addition to local pressure bending, the plate in the region of the connectors must be designed for impact from the connector pins during mating. The reaction from the fully compressed R1 spring was 15 kips. This load was applied to typical stiffener spacings and resulted in a 0.5-inch-thick plate being required.

In summary, the basic plate thicknesses required for local bending are:

- Deck 0.25 inch
- Bottom 0.25 inch
- Sides 0.188 inch
- Ends 0.5 inch
- Side near connector 0.5 inch

Deck plate is typically 50 ksi and all other plate 36-ksi yield steel. These sizes were adjusted as discussed below for global stresses and other in-plane design issues.

7.4 Stiffener Design

Stiffeners were designed for local bending loads and subsequently checked for global stresses. In all cases the stiffeners were assumed to act compositely with the plating in resisting bending loads. Following common marine practice, the effective plate was assumed to be the stiffener spacing or 40 times the plate thickness, whichever was less.

Due to the high local deck loads, 50-ksi yield material was assumed for the deck stiffeners. Even with this higher strength steel the angles were large relative to other stiffening angles (6 x 4 x 0.375 inches). With this size and the nominal 1-foot spacing, welding will be difficult. It may be that for a prototype where only one type of connector is used, the framing arrangements could be modified and a detailed tradeoff study performed of plate thickness vs. angle size and resulting weights to optimize the structure for weight and constructability. The longitudinal deck stiffeners contribute to global bending section and thus must maintain effective continuity. For the R2 side connector condition, the stiffeners were interrupted by the upper R2 pin trench. To maintain hull bending strength, the deck plate thickness was increased in this region.

The bottom and side stiffeners are small (2.5 x 2 x 0.25 inches) due to the low hydrostatic load. Since they are small, in regions of high local load transfer, such as at the R1 Connector interface they are replaced with more substantial members.

7.5 Frame Design

The frame elements are typically tee sections designed as simple beams assuming composite action with the plate similar to the stiffeners. Typically, the stiffeners are assumed to pass through the web of the tee, which is a typical marine construction detail. Frames for the Center Test Bed, R1 Side Pontoon, which are typical, are shown on Drawings 24 to 26.

Typical side and bottom frame members are WT6x7 rolled shapes. This size was chosen for its light weight. The depth is nominally 2.5 times the stiffener depth, which is a typical beam depth ratio when cutouts are used. Since marine practice normally uses built-up sections in this application, the general notes allow substitution of the same size elements for the rolled shape. The nominal tee section was enhanced in areas with

additional loads. These included Frames 2 and 11, which were seriously modified to resist the mooring ring loads. Frame 3 was modified to provide high vertical shear capability to help resist the connector bending moments.

The deck beam frame component is controlled by the local deck load. In this case the beam carries the entire 78,400-lb. load, which results in high bending moments and shears. The resulting beam is 15 inches deep with an 8 by 0.375-inch flange. The 15-inch depth was originally selected to allow the 6-inch angles to pass through. However, with the cutouts the shear stresses were excessive. In traditional practice this would be solved by closing the openings with collar plates. However, in this case, where the stiffeners were so close together, this was not possible. Thus, all deck stiffeners between the beams are intercostal.

The R2 side pontoon was similar except for the two new frames at 6 and 7 replacing the R1 slot. These were configured similar to typical frames except that the outboard beam was formed with the inside R2 housing plate.

7.6 Global Stress Check

Since a test bed is made up of three pontoons connected at isolated locations and contains the transverse R1 Connector slot, the assessment of the hull for global bending and shear forces required a detailed finite element analysis. The goal of this analysis was to develop connection loads at the PC1 Connectors and global stresses in all plates and stiffeners. The finite element analysis was done on one-half of the center test bed assuming symmetric load conditions. Results were assumed to be applicable to the raked test bed also. A report outlining this analysis is included as Appendix D and is summarized briefly below.

The finite element grid was laid out fine enough to capture all plate panels and major openings. The grid layout also matched stiffener and frame layouts. All plates were modeled with plate elements that included bending as well as in-plane stiffnesses. Stiffeners were modeled with beam elements. Although the purpose of the analysis was to verify in-plane plate stresses, the frames were modeled in detail so that their stiffnesses were included in the pontoon box stiffness in resisting unsymmetrical loads and geometric irregularities such as the R1 side slot.

Since detailed load information such as wave pressures and phases was not available, the analysis was performed by applying counterbalancing connector loads at each end. This was conservative since the maximum connector loads were applied and they actually only occur at one end. Shear was applied by scaling dead load to arrive at the maximum shear load. Loads are as defined in the Design Basis (Appendix A).

Plate stresses were checked for both strength and buckling criteria. Since the plates were generally thin, buckling typically controlled. In general the plates originally selected were found to be adequate. The 0.25-inch deck plate was generally acceptable except at the ends and near the center slot. In these areas the plate thickness was increased locally. The bottom plate could be 0.188-inch thick, but would require more stiffening, which would result in no weight savings. Therefore, the basic 0.25-inch thickness was used. This

thickness increased near the ends and in the middle, similar to the top plate. For the middle pontoon the plates at both top and bottom maintained a constant 0.25-inch thickness since there were no local high forces from connectors. 0.188-inch-thick plate is acceptable for the side plates as long as an extra stiffener is added at the bottom. This panel saw higher axial stress from beam bending compressive stresses.

7.7 Raked Section

The raked test beds are very similar to the center test beds except for the raked end. Framing arrangements were maintained the same as for the center test bed. The 2 foot 6 inch depth at the rake was determined to provide the required structure at the F1 Connector and allow for a docking funnel. The rake was then extended at a 1:1 slope to the bottom. At the rake-to-bottom corner a strengthening beam was added normal to the mitered corner. Frames are nominally the same except in the region of the F1 trench. The trench is so deep that it is not feasible to increase the beam depth to allow it to pass through. Thus, a partial bulkhead was added below the trench for support.

7.8 Connector Interfaces

7.8.1 R1 Connector

Connector forces from the R1 Connector are transferred to the hull by means of the side mounted bearing plates on the connector unit (Part 2, Drawing 151). When the connector assembly is installed, these plates slide into vertical slots in the hull recess. The slots are shown on the bulkhead elevations and sections on Drawings 25 and 26. The plates transfer horizontal loads in bearing directly to 2.5-inch-thick bearing plates embedded in the bulkhead. These plates are connected with a 1-inch plate to form a load transfer assembly that distributes the horizontal bearing load in shear into a heavy horizontal built-up tee stiffener. This stiffener then distributes the load into the vertical plating which in turn distributes it to the top and bottom decks where it becomes flange force in the hull acting as a box beam.

For vertical loads, which are considerably smaller than the horizontal reactions, bearing plates are located in the slot, top, and bottom. These are shown on Drawing 26. The bottom plate is welded into place. The intent is that this plate be trimmed and welded into place after the basic hull is fabricated and surveyed. This allows for fine tuning the location to minimize tolerance issues. The top plate works in a similar manner except that it is bolted into place utilizing tapped holes in a block welded inside the hull.

Transverse shears are small and are resisted by direct bearing of the connector assembly face on the hull face.

7.8.2 R2 Connector

The R2 Connector is integral with the hull, and the interface is less readily definable. For purposes of this discussion, the connector includes the pins and vertical beam consisting of the outside hull, webs, and internal flange. The interface is where the beam connects to the hull.

Horizontal reactions are taken directly from the vertical beam webs into the deck. Thus there is a 0.75-inch insert plate at this location as shown on Drawings 21 and 22, for example. This plate is designed to carry the shear laterally past the guillotine slot so that it can be dispersed into the top and bottom plates.

Vertical and horizontal shears are taken by the front flange directly into the hull skin. The extent of the flange plate and thickness provide more than adequate distribution of load by the time it is dispersed to the nominal side shell plating.

7.8.3 F1 Connector

The F1 Connector transfers load to the hull through contact points in the receptacle. Axial loads are taken from the guillotine into the side wall of the connector storage trench. The trench and details are shown on Drawing 57. The guillotine reaction is taken by a 1-inch plate that spans top to bottom. The load is transferred from this plate to the deck plate and trench bottom.

Vertical, horizontal, and torsion reactions are taken at two hardpoints built into the receptacle. The first is a series of plates at the internal edge of the receptacle bell mouth. The second is a similar set of plates at the rear of the receptacle at the first guillotine. These plates typically carry the vertical contact forces in shear to the sides, where they are resisted by the trench side wall and carried to the test bed end and the first frame. Similarly, the horizontal forces are carried to the deck and trench bottom.

During deployment there is a safety line to prevent the connector from being pulled overboard. This deadends at the guide at the end of the trench. Once the connector is pulled or pushed out, its final position is adjusted by hand until the guillotine can be set.

7.8.4 PC1 Connector

The PC1 Connector top and bottom connections transfer tension and compression forces directly into the top and bottom frame members. The frame webs are typically increased in thickness to carry the local tension. This tension is then disbursed by the frame web into the top and bottom plate.

The center shear connection transfers the shear load directly into the hull skin by shear. Local bending due to eccentricities of the transfer block are resisted by the vertical frame member.

7.9 Hawsepipes

7.9.1 R1 Hawsepipe

The R1 longitudinal hawsepipe is shown on Drawing 100 and consists of a horizontal 14-inch-diameter pipe with a 10-inch diameter sloped pipe to the deck. The 14-inch diameter provides adequate clearance for the 12-inch-diameter alignment pin. The length of the horizontal section is adequate to store the alignment pin in its retracted position. A cone is provided at the face to facilitate mating. The 10-inch pipe size was chosen to accommodate the Nylite shackle at the end of the marriage bridle nylon pigtail.

An eccentric reducer is used to transition between the pipes. This results in the line under tension being held down somwhat from the top to allow the pin to enter the cone on the outside during mating.

A roller was included at the top to limit friction. With the rope turning 45° in one bend, the friction reduces effective tension by about 25%. If a smooth bend were to be used on top, the total reduction would be unacceptable, and therefore a roller was added. The roller is a drop-in unit for ease of maintenance.

The R1 transverse hawsepipe is shown on Drawing 101. In this case, in order to provide storage room for the alignment pin, the horizontal pipe must extend across the pontoon. To allow space for deck rigging, NFESC specified that the hawsepipe not extend into the middle pontoon. This resulted in the right angle configuration shown. With the right angle, the friction from even one bend is unacceptable and rollers are required at the top and bottom. In order to make the rollers removable, the vertical hawsepipe becomes a rectangular trunk. The transition is used to bring the diameter down to a size to mate with the trunk. In this case the line is held down by the roller and is set nominally at the centerline of the horizontal pipe. Note that in this case, with the right angle bend and roller clearances shown, it is not possible to run the large soft line hardware through the hawsepipe, and therefore the softline is not used in transverse mating.

7.9.2 R2 Hawsepipe

The R2 hawsepipes are shown on Drawings 102 and 103 and are similar to the R1 except that the horizontal pipe is rectangular to suit the R2 pin and alignment element. The outboard end of the hawsepipe mates to the guillotine slot and then extends through the hull in the form of the pin receptacle built into the R2 structure.

7.9.3 F1 Hawsepipe

The F1 hawsepipe is essentially a trench in the deck and is shown on Drawing 57 for a typical case. The outboard end is enclosed to provide for the structural reaction for the connector in the mated condition. The outboard side includes sloped sides to facilitate mating. The inboard end includes a transverse pipe section to act as a line depressor. This element also includes a padeye to which to attach the F1 holdback line. Split pipes are

welded around the trench end at the deck to provide a smooth surface for the line to run on during mating since friction is less of a problem in this case due to the shallow line angle.

7.9.4 Hawsepipe Roller

The hawsepipe roller assemblies are shown on Drawings 104 and 105. The same roller, consisting of a pipe on an axle, is used in all cases. For the deck level units the roller is mounted in a frame consisting of heavy side plates and tube transverse members with split pipes at the top to provide for lines to be dragged off center in some fleet angle. It is assumed that the lines will come off the roller nominally in line with the roller and the fleet angle will be small. The assembly drops into the deck opening and is restrained by direct bearing on the receptacle box. Small plates are provided to keep it nominally in position horizontally.

In the transverse cases the lower roller assembly is similar in concept, but since the reaction is upward, struts are added up to the deck level. These butt against a plate welded to the side of the trunk. The bolts simply keep the strut bearing plate in position, but the load is transmitted in direct bearing. Guide plates are furnished at the bottom to support the unit nominally in position until the bolts are installed. The unit is readily removable for maintenance.

7.10 Outfitting

7.10.1 ISO Lift Points/Fenders

The pontoons all have two sets of ISO connectors on the top, four corner connectors and four interior connectors. This allows handling the pontoons with 40-foot or 20-foot lifting frames. For the center test beds, the outside corners also include lower ISO connectors for stacking and trucking purposes. Interior lower connectors are not provided. For the raked test beds, lower connectors are not provided at the raked end due to the rake. In this case, in order to stack the units, a lower bearing point is provided below the interior ISO connector at the raked end. Thus the raked pontoons will stack by resting on the square corner and the bearing point inboard of the rake. It is assumed that the raked test beds would be stacked on top of the center if placed in a ship hold.

For the outboard pontoons the ISO corner fittings are removable. This feature is required on the interior side to allow the assembled test bed to slide over guides in the ship hold which normally separate 8-foot containers. This configuration is shown in Figure 7-1. The maximum width of the guide is 12.5 inches (Reference 3) and the depth, 30 cm (Reference 4). Thus, the notch is shown 15 inches wide by 12 inches deep. The exterior ISO connectors are removable to allow for the installation of a corner fender for at-sea operations.

The corner ISO connector units consist of the connector top and bottom mounted to a 6-inch-square steel tube post. The post provides a column to resist stacking loads as

required by ISO (Reference 5). For the middle pontoons this post is built into the corner of the pontoon. For the exterior units the post and connectors are located in the notches. They are connected at the top and bottom by horizontal bolted shear connections. The vertical load is transferred to the hull by a shear plate similar to the PC1 Connector. The removable ISO connector assembly is shown on Drawings 120 and 121. Other ISO connector attachments are shown on the pontoon drawings.

Forces used to design the connections were a result of both lifting and transport as required by ISO. The bottom bolted connection was governed by the deceleration load between pontoon and truck as required by ISO. The top bolts and the shear connection of the corner connectors and the interior connectors were designed for the pontoon lift weight. In these cases, the connections were designed for the lifted load with a safety factor of 6.0 against ultimate strength. Ultimate tensile stress (F_u) was considered for tension and bending and $F_u / \sqrt{3}$ for shear.

The fender consists of a structural assembly with rubber fender units that fits the notch and connects to the ISO mounting. The fenders are square sections of solid rubber molded onto a steel bar for mounting. A typical product is the Trellex Fender Bar produced by Trellex/Morse of Keokuk, Iowa. It is mounted into a built-up steel angle which has mounting plates top and bottom to connect to the ISO bolt locations. A 1-meter fender is mounted top and bottom, leaving a small gap mid-height. The fender assembly is shown on Drawing 122. For structural design purposes it was assumed that the worst case is for one of the fenders to be compressed to half its thickness at the outside edge and uncompressed at the interior face. That is, the colliding barge does not strike the hull corner. This is shown in Figure 7-2. Since this is a solid rubber fender, the resulting bearing pressures are high. To minimize stiffening of the bulkhead to take the loads, the fender assembly angle was designed to span the width of the notch horizontally. Then the load is resisted by the bulkheads.

7.10.2 Test Bed Lift Points

Individual pontoons will be handled by the ISO connectors, using either the ones at the corners or the interior set. However, since the system is designed to be assembled into test beds on land (or on ship board for the prototype), a set of lift points capable of lifting the assembled test bed is provided. These are located adjacent to the interior ISO points on the middle pontoon of each test bed. The detail consists of a manufactured master link engaging a pin in a box built into the hull. The master link is built into the box as it is assembled. When not in use the master link rests on the pin and hangs free below the deck level. The box dimensions have been selected to allow the link to rotate fore-aft and transverse enough to accommodate a four-part 60° sling. The sling is specified on the drawings to ensure that the correct lifting hardware is available.

The lift points were designed to lift the anticipated test bed weight of 60 LT (135,000 lbs.) with a factor of safety of 6.0 against ultimate strength. Since the criteria was to design against ultimate strength, it was assumed that the individual sling legs will stretch and distribute the load equally among legs. The master link is specified to have a safety

factor of 6.0. Ultimate tensile stress (F_u) was considered for tension and bending and $F_u / \sqrt{3}$ for shear in design of the structural components of the attachment to the hull.

7.10.3 Cleats and Mooring Rings

A cleat and mooring ring are provided near the end of each exterior pontoon for attaching tugs and smallcraft. The cleat is a weldable, cast steel, 24-inch cleat with a chock hole. It is located in a sloping notch at the deck edge to provide flush side and deck surfaces. The notch size was selected to provide flush mounting for the Navy cleat (Reference 6) supplied as GFI. Commercial cleats are typically somewhat shorter and will fit with more clearance. The cleat is mounted to a 1-inch plate to distribute the load and resist local forces. It is backed up by a series of stiffeners to carry the loads back into the hull framing. The cleat and support framing is shown on Drawing 126.

The mooring ring is a steel casting with a bar to pass the mooring line around. The dimensions of the casting were determined by NFESC to facilitate passing the line through. The bar diameter is required to carry bending imposed by the applied load. The casting is welded into the side of the hull. Due to the thin hull steel thickness and high loads, the mooring rings are located on frame lines and partial bulkheads are provided to support the high loads. In addition, there are horizontal stiffeners to provide resistance to bending imposed by the load being applied off center. The mooring ring is shown on Drawing 125.

Both the cleat and mooring ring are designed for a working load of 40,000 pounds with a safety factor of 6.0 against ultimate strength. Ultimate tensile stress (F_u) was considered for tension and bending and $F_u / \sqrt{3}$ for shear.

7.10.4 Ladders

Exterior ladders are provided for access from small boats, for recovery of person overboard, and for access to the deck of individual pontoons when resting on land. For exterior pontoons a single ladder is located on the outboard side. For the middle pontoons, the ladder is located at one end so that there is an end transfer point when the test bed is assembled. For the center test bed, the middle pontoon ladder is located on the end that will be exposed when the bed is assembled with its raked test bed partner.

The exterior ladders are provided with a series of cast inserts embedded in the hull side. These are staggered at 1-foot intervals with a grab bar at the top. The ladder is shown on Drawing 110. The cast insert is a stock item from Blue Water Marine, Houston, Texas. It could also be custom-cast by other vendors.

Interior ladders are provided at each hatch. These are conventional steel ladders welded onto the hull framing. They are shown with the hatches on Drawing 127.

7.10.5 Hatches and Covers

Hatches are provided for access to each pontoon. In the case of the R1 side pontoon, the connector recess effectively cuts the hull in half, and one hatch is required at each end. Only one hatch is required for all other pontoons. The center pontoon hatch is required to be quick acting and sized to pass a 12 x 24 x 36-inch instrumentation box. The other hatches may be bolted and of minimum size for inspection access. For ventilation purposes, each compartment must have a deck opening. Thus, in each compartment without a hatch, a small ventilation port is provided. This port needs to be a minimum of 4 inches in diameter for inspection and dewatering, if required. Since this is a test facility and not a true prototype, the hatches and ventilation ports were not designed for the same high unit loads as the deck. These high loads will require custom hatches for a prototype system. Since the test bed has a limited life and no specific operating criteria have been identified except for the center pontoon hatch, the hatch material and the determination as to whether it is bolted or quick acting is left to the Contractor for maximum flexibility.

Hatches are not detailed, but are specified by notes on the drawings. Since the deck is highly stressed, insert plates are required. The hatch details are shown on Drawing 127. The following vendors who have suitable hatches have been identified:

Vendor	Models For Center Pontoon Hatch	Models For Typical Hatch	Models For Inspection Port
BAIER Hatch Company Inc. 1-800-455-3917		BFHO 13.5X20.5	BFHSR8
Baywood, Inc. 1-800-386-6156	B-145	B-111	B-189 B-144
Blue Water Marine 1-800-416-7951	Part No. H.62054	Part No. M.73003 (15x23)	

In addition to the deck hatches, there are bolted plate covers in the watertight bulkheads. Since stresses are typically low in the bulkheads, there is no insert plate and the opening is cut directly in the bulkhead plate. The cover is secured with welded studs and a neoprene gasket. The cover detail is shown on Drawing 127.

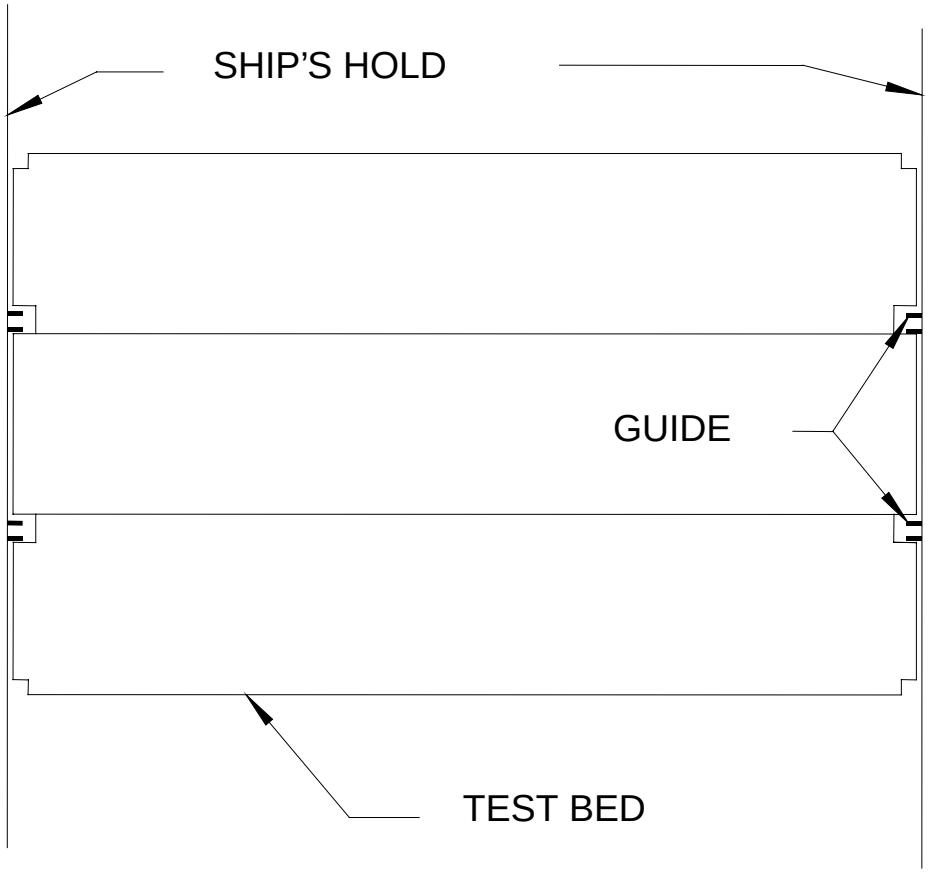

Figure 7-1. Ship's Guide System

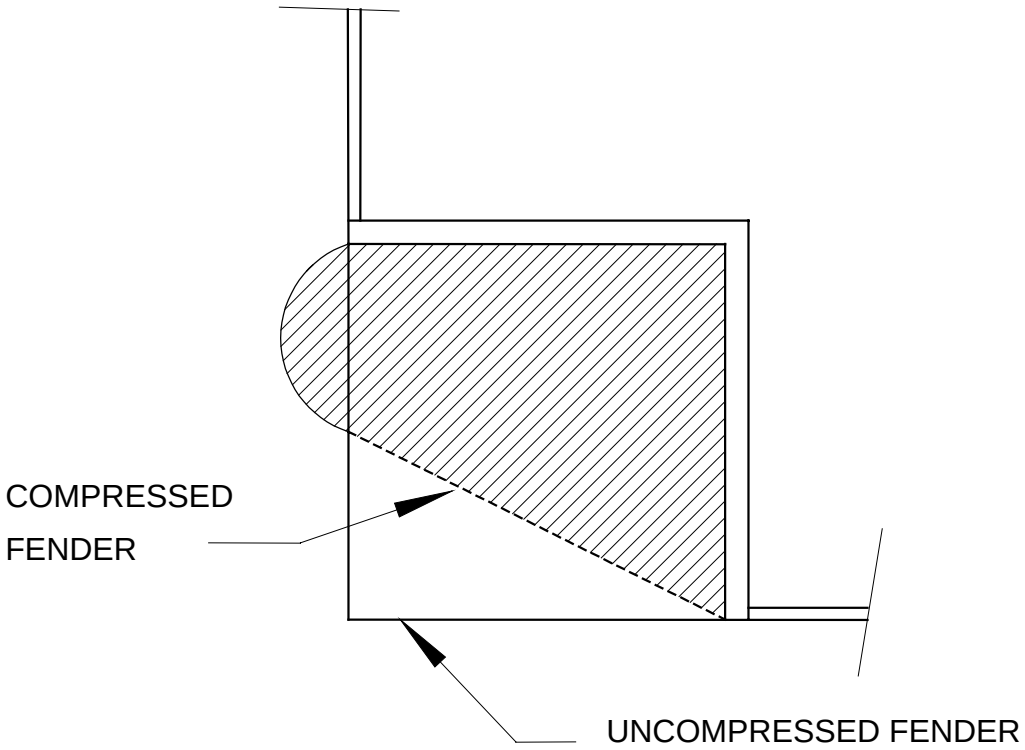

Figure 7-2. Assumed Fender Compression

8 TOLERANCES

8.1 Approach to Close Tolerance Control

The need for close tolerance control in the fabrication of the Lighterage system results from the required degree of interconnectability of the pontoon sections. In order to ensure that pontoons are standardized and interchangeable, the mating points must be held to tight dimension control so that several pontoons can be connected without excessive tolerance accumulation, which could prevent mate-up of subsequent sections.

To achieve these objectives cost-effectively, the pontoon sections have been designed so that standard industrial practice and typical tolerances are acceptable for most construction. The use of close tolerance control is limited to critical dimensions that are integral to the pontoon interconnections. These are the dimensions that:

- Define the points of contact between connected pontoons
- Locate the connector in the pontoon
- Define the size and shape of the connector.

Close tolerance is expected to be measured using electronic theodolites or similar optical survey equipment, directly coupled with computer-aided data reduction (sometimes referred to in the trade as Total Station surveying equipment). These techniques can, over the distances expected for pontoon fabrication and inspection, achieve measurement accuracies of a few thousandths of an inch.

The design objective in all pontoon connectors is to ensure that connectors and their receptacles will engage and lock under all assembly conditions. By first defining the location and tolerance of the intended contact points between pontoons, a frame of reference can be established which then enables the definition of the connector location and tolerance. The size and tolerance on size of the connector then follows from the envelope of possible positions resulting from the accumulated tolerance on its position.

To establish the required tolerances, a mathematical model of each connection was created. By this means, the effect of assigning tolerance and allowance at various points in the assembly could be explored. By testing for sensitivities, and applying tolerance values consistent with anticipated manufacturing techniques, the final specifications call for tolerance controls which efficiently achieve the assembly requirements and are consistent with cost-effective construction.

In the design drawings, the method of tolerance designation as described in Standard ANSI/ASTM Y14.5M-1994 has been used. This standard enables one, through the definition of a fixed frame of reference, to unambiguously specify the precise range of allowable position for any pontoon or connector feature.

8.2 Pontoon Tolerances

Test bed pontoons have been designed to be fabricated using standard industry practice without expensive close tolerance control. In order to ensure an accurate positional relationship between mating pontoons, bearing points of contact have been defined that can be installed after pontoon fabrication is largely complete. This enables the as-built condition of the pontoon hull to be surveyed and the position of the bearing plates "tuned" at installation so that their positional accuracy is correct to close tolerance requirements. These bearing points also serve to define the reference frame from which the position of the critical connector surfaces are dimensioned, so that the connectors are positioned directly with respect to the point of contact with the adjacent pontoon.

The lateral connection of pontoon to pontoon (to form the three-pontoon test bed) is worthy of some consideration because of how variability in this assembly contributes to the need for allowance in the R1 and R2 Connectors. (Allowance is used here to refer to the difference between the nominal sizes of mating parts; i.e., the allowance between a 1-inch-diameter pin and a 1.125-inch-diameter hole is 0.125 inch.) Figure 8-1 shows how the tolerances inherent in the shear connections between the middle and side pontoons potentially result in a vertical displacement between the ends of adjacent pontoons. Figure 8-2 shows how, when three pontoons are connected side-to-side, this displacement results in rotation of each pontoon, contributing to the potential lateral displacement of the upper and lower connector elements. This lateral displacement, which ranges from 0.052 inch for the R1 components to 0.089 inch for the upper pin in the R2 Connector, must be considered in calculating the required allowance between mating connector components.

8.3 R1 Connector

Tolerances for R1 Connector dimensions are influenced by the comparatively large number of interfaces within the connector and between the connector and the hull. This ultimately requires that tight control be held on a correspondingly large number of surfaces in order to keep tolerance accumulation to a manageable value.

The objective of tolerance definition in the design of the R1 assembly is to ensure the position of the projecting pin relative to the mating hole in the adjoining pontoon. The elements that control this relative position are:

- Interface between the two pontoons
- Interface between the R1 Connector assembly and the pontoon
- Position of the pin or hole within the connector assembly

Variability in the interface between pontoons is subject only to the tolerance on the position of the bearing points of contact and (because the direction of this variation is along the longitudinal axis of the connector) does not influence the required allowance between the pin and hole to ensure engagement. Rather, this variability must be considered when defining the configuration of the guillotine locking mechanism and the

dimensions between the connector bearing surfaces and to ensure that connection forces are properly carried into the pontoon structure.

The tolerance on the position of the pin is the sum of the effects of the tolerance on the pin size, the tolerance on the position of the pin in the connector assembly, the tolerance on the connector assembly size, the tolerance on the position of the assembly connection surfaces in the pontoon, and the allowance between the assembly and the pontoon. For this installation, most of these tolerances are taken to be represented by a 0.060-inch tolerance zone (essentially equivalent to a tolerance of ±0.030 inch) which are readily achievable by standard fabrication methods. Allowances for installation of the assembly into the pontoon are 0.125 inch laterally and longitudinally, which are considered to be the minimum which can be used to ensure ease of installation in the expected environment of use.

The tolerances specified for the pin and mating hole were given considerable attention. Using the tolerance model, two possible approaches to defining these controls were considered — the pin and hole could be assumed to be formed from bent plate and pipe components, with corresponding tolerances of fabrication, or they could be assumed to be machined, with a much tighter dimensional control. Based on standard fabrication practices, the first approach would result in variability on circularity and centerline position of as much as 0.250 inch on the diameter, which contributes substantially to the tolerance accumulation of the assembly. If a machining process is assumed, tolerance control as tight as 0.010 inch on the diameter can be easily achieved, and the position of the pin and hole within the assembly can be bored in the same setup, assuring close position control. This sensitivity analysis showed that it is impractical to design the R1 assembly without machining these critical features as the accumulated impact on feature position is prohibitively large. Actual tolerances specified for the pin and pin holes were 0.060 inch on the diameter. The cost penalty of machining is probably minimal since the pins require setup to machine the groove, and boring the receptacles allows for looser tolerances in fabrication of the pipe.

Ultimately, the stack-up of tolerance is used to establish the maximum out-of-position allowance of the male connector component in the horizontal and vertical directions, and then establishing the required allowance in the female component to assure mate-up. Using the values documented in the close tolerance calculations, and minimum required allowance for the R1 assembly was 0.330 inch. A nominal value of 0.375 inch was specified.

8.4 R2 Connector

The R2 Connector is of a substantially simpler geometry than the R1 and results in both fewer dimensional elements contributing to tolerance accumulation, and more lenient controls on those critical surfaces. The fact that the R2 connector is not a removable assembly to be fitted into the pontoon contributes greatly to the comparative ease of tolerance specification. The elements that contribute to tolerance stack-up then are:

- The interface between the two pontoons

- The position of the pin or hole within the connector assembly

The pontoon-to-pontoon interface remains as previously described, contributing to the calculation of the dimensions of the connector locking surface locations. The tolerance on the position of the pin is the sum of the effects of the tolerance on the pin size, the hawsepipe walls, and the allowance between the pin and hawsepipe.

Tolerance on position and size in the R2 Connector Assembly is generally 0.060 inch. As the hawsepipe on both the male and female pontoon in the R2 mate-up are of the same dimension, the allowance between the connector pin and the hawsepipe is recursive, i.e., it contributes both to the potential out-of-position of the pin and to the assurance of engagement in the female pontoon. Again, by exercising the mathematical model, an acceptable allowance has been established as 0.250 inch in the vertical direction and 0.375 inch in the horizontal.

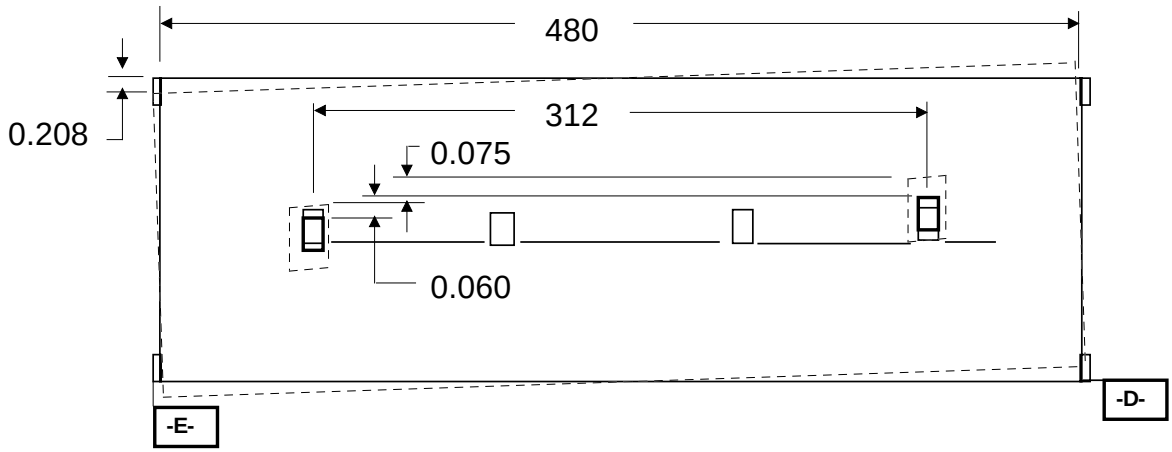

Figure 8-1. Potential Vertical Relative Displacement at the Pontoon End

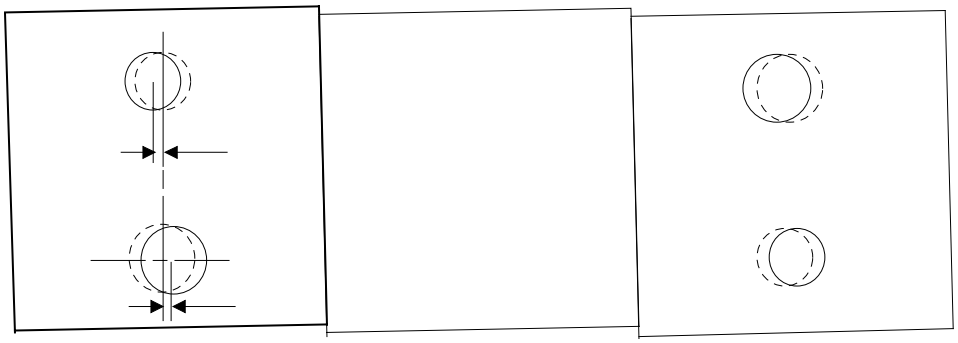

Figure 8-2. Potential Rotation at the Pontoon End

9 MARRIAGE BRIDLES

9.1 System Description

The marriage bridle is used to pull the test beds together during the assembly process. The mating operation is performed in the water with warping tugs maneuvering the two mating test beds. The marriage bridle consists of two lines which are threaded through the hawsepipes in the receiving test bed and attached to the connector pins or alignment pins on the donor test bed. The live end is then reeved through deck-mounted blocks and chocks to a winch on the warping tug holding the receiving test bed. The lines are then used to pull the test beds together while the tugs maintain nominal pretension.

Since mating is intended to occur in up to Seastate 3 conditions, the lines will be subject to substantial dynamic loads. To minimize these loads the marriage bridles include nylon energy-absorbing pigtails for the longitudinal mating condition.

NFESC analyzed the mating condition and determined the basic configuration of elements and design criteria summarized below. Dimensions and arrangement of deck rigging is determined from the Draft Test Plan (Reference 7).

9.2 Design Criteria

The design load as determined by NFESC is 38 kips of dynamic load and 10 kips of nominal static load. NFESC specified that this combined 48 kip load be assumed to be split equally between the two legs.

NFESC specified that the safety factors to be used for marriage bridle design are 3.0 for dynamic load and 5.0 for static load. Since the controlling load is mostly dynamic, 3.0 was used throughout. This factor of safety is applied against ultimate capacity of lines and hardware components. It is also applied to the structural design of dead end attachment points.

9.3 Bridle Components

The marriage bridle assemblies and components are shown on Drawings 135 and 136. All of the various marriage bridle configurations include a primary pulling line, which is a 1-inch-diameter by 150-foot-long wire rope. For the longitudinal marriage bridle arrangements, this pulling line is attached to a 1.5-inch-diameter by 29-foot-long nylon pigtail before attaching to the donor test bed. The nylon pigtail is not used in the transverse case because the nylon rope hardware will not fit through the transverse hawsepipes and the dynamic load is anticipated to be less severe. The marriage bridle then attaches to the F1 Connector, the R1 alignment pin, or the R2 Connector.

For the F1 and R2 Connectors, the connector takes the mating load directly into the hull, and the holdback assembly merely keeps the connector from being inadvertently pulled overboard. It is also used in retrieving the connector after mating. Thus, this line is sized

assuming that the tug pulls on it with a 10-kip bollard pull during mating preparation. This results in a 0.75-inch-diameter wire rope and associated hardware. The holdback for the R1 Connector takes the full mating load, and therefore uses the same size hardware as the rest of the bridle. The holdback assemblies include a length of chain and a pelican hook to allow adjustment of the system.

Due to different geometries the various assemblies have different lengths, but they generally use the same hardware. To avoid duplication of hardware, only one set is provided. It is assumed that the hardware will be rerigged with the appropriate lines for each mating case.

9.4 Bridle Support Components

The marriage bridle is attached to the deck at the dead ends and reeved through blocks that are attached to the deck. Deck attachments are made by use of a chain looped through a pipe elbow embedded in the hull, or attached to the ISO fitting with a connector to be fabricated to an NFESC design. Attachments generally use chain and a pelican hook for adjustment. The exception is the R1 transverse turning block attachment, where the dimension is too short for the chain/pelican hook arrangement. In this case an extra shackle is provided. Adjustment can be made to within a shackle length.

In all cases the two marriage bridle legs come together and pass through a roller chock mounted on the deck edge. The roller chock consists of opposing single chock elements mounted on a bearing plate. The bearing plate has mounting holes drilled and tapped to suit the chocks. It has holes to fit over the fender attachment bolts. There are shim plates between the roller chocks and bearing plate which have holes for bolt heads.

From the roller chocks the lines pass to a double block mounted on the warping tug. The double block is provided as part of the system, but the mounting is provided by others.

9.5 Winch Considerations

The winch is the standard double drum winch supplied with the warping tug. This winch was reviewed as part of this project's scope of work. The principal issues raised were the structural and mechanical strength of the winch to sustain the high dynamic line loads and the tendency of the line to pull into previous wraps under dynamic loading. NFESC investigated the winch capacity and determined that it could sustain the loads. The line pull-in problem still remains and will have to be resolved in the field. Experience indicates that field personnel should be prepared to be able to free a line buried in lower wraps. Note that if this occurred it could be during a critical phase where the test beds are in close proximity and may be impacting each other, causing the high line loads. Therefore, freeing the line could be a dangerous operation.

An alternative method to reduce the snap load and line pull-in problem would be to use a constant tension winch. A constant tension winch minimizes dynamic line response mechanically, maintaining nearly constant tension in the line. Under this condition the line is much more likely to spool on and off the drum properly and not be pulled into

previous wraps. Also, if high snap loads tend to occur due to dynamic response or barge contact, they are mitigated, thereby minimizing the chance of line breakage and resulting danger to the deck crew. Assuming that the line can ultimately freely spool off the drum, the worst downside is that the line comes off the drum under no tension. Though Bechtel National originally recommended the use of a constant tension winch, we were directed by NFESC to use the standard double drum winch for the design basis. The reason provided for this direction included: 1) the Navy has a significant inventory of double drum winches that meet mission requirements and NFESC did not want to add additional hardware if found to be unnecessary, and 2) the Navy could at a later date exercise the option of demonstrating the system with a constant tension winch if the standard double drum winch were found to not be suitable (since the marriage bridle hardware has been designed to a worst case condition, the switchover to a constant tension winch would not require any changes to the bridle system). NFESC recognizes the risks in using the present system and has indicated that they will take appropriate safety precautions during the tests.

10 INSTRUMENTATION

10.1 Introduction

The original instrumentation plan included placing load cells between the R1 Connector and pontoon structure and straingaging connector pins. After the R1 Connector was modified, its load paths were much more determinate and connector loads could be determined from strain gage readings. Also, between the time of the original statement of work and connector design, the loads increased by several times, rending the use of load cells impractical due to their size and space requirements. Thus, the only instrumentation provided is strain gaging of connector pins. This consists of gages applied directly to the R1 and R2 pins and the use of a load pin for the F1 connecting pin.

The scope of this project only includes providing for the installation of the strain gages and pigtails. Cable penetrators are called out in the middle pontoon for the pigtails to be passed through to the data acquisition equipment below. Data acquisition is provided by NFESC and is not considered directly here. Gage calibration, which is a major task due to the magnitude and nature of the loads, is not included in this effort either. Although calibration is not included, the anticipated loads during testing are provided in Table 10-1 for reference. These loads are typically less than the design loads since the test configurations do not include the maximum number of test beds assembled, which yield the design loads.

10.2 Strain Gage Description

A strain gage is a device used to measure the change in a linear dimension of a body. The strain gage usually consists of a fine wire or metal film mounted on a mylar backing. The strain gage can be bonded directly to the body being measured using adhesives. This is a bonded strain gage. The strain gage may also be bonded to a small strip of metal, leads attached, and then hermetically sealed to the metal. The strip of metal may then be welded to the body being measured. This is a weldable strain gage.

Installation for a bondable gage consists of polishing an area to a fine surface, bonding the gage to the surface, curing the adhesive, attaching lead wires, and then finally sealing the gage. Successfully installing bondable gages requires experience. If the surface is not prepared correctly, the gage will not bond correctly. If the gage is not bonded correctly, the readings will be useless. If the gage is not hermetically sealed and moisture leaks in, the gage will fail or will give invalid readings. This process can take four or more hours per gage location, depending on accessibility and type of material the gage is bonded to.

Weldable strain gages are usually easier to install and prove to be more reliable in harsh environments. Installation for a weldable gage consists of grinding away surface rust then welding the gage in place. It can take as little as an hour or several hours depending on surface condition and accessibility.

Considering the application location and potential surfaces to be dealt with, the decision was made to use weldable gages for higher reliability. Regardless of the type of gage, the probability of gage failure is high when a gage location is difficult to work on, such as for this installation. Thus, spare gages are shown in all locations.

Gages may be uniaxial for measuring tension/compression in one direction or may be in the form of a rosette of two gages at an angle to the load to measure shear. The uniaxial and shear capabilities may also be combined into one gage. For this project, independent gages are used, and shear gages are provided only where shear is to be measured.

The weldable gages come with preattached cables. Since the runs from gage to data acquisition are short, in this case the gage is ordered with a 50-ft pigtail, which is sufficient to make the complete run. Therefore no connectors are required, but rather the wire is attached directly to the acquisition unit. The cables may be two, four or six wire depending on the gage and whether a shunt is used. In this case, NFESC requested that individual gages have individual shielded cables. This means that uniaxial gages have a single two-wire cable, since no shunt at the gage is required. The shear rosette, which consists of two gages, includes a shunt and thus requires three individual two-wire cables.

The gages will all be 350-ohm units. An excitation voltage of plus and minus 12 volts to plus and minus 15 volts is preferred. With a sensitivity of 3mv/V, that gives 90mv full scale. If the A/D converter is capable of 20 volts peak to peak, an amplifier with a gain of about 200 will be required. The filter should have a cutoff frequency of 5 Hz or less.

Gages have been selected and located to measure specific forces such as shear, tension, compression, and bending. Gage specification and installation are given in Specification 202. Gage locations are shown on the drawings as indicated below.

10.3 R1 Gage Installation

R1 gage locations are shown on Drawing 159. Due to the mechanical arrangement of the R1 connector pin, the back of the pin is accessible during fabrication and the gages can be installed inside the pin. A physical shield is provided to protect the gages from the spring. The wires are routed into the hollow connector tie rod and out the back of the connector.

The strain gages on the R1 pins measure vertical and horizontal bending, axial tension/compression, and vertical shear. To measure bending, tension, and compression, uniaxial gages are applied on opposite sides of each pin, top/bottom and side-to-side. To measure shear, a shear rosette is applied to each vertical side of the pin. Spares are installed for all gages. There are twelve gages on the R1 pin.

10.4 R2 Gage Installation

R2 gage locations are shown on Drawing 171. In this case, the inside of the pin is congested, and it is not possible to install the gages on the inside. Thus, for both the top and bottom pins, slots are milled in the outside of the pin and the gages mounted from the

outside. The pigtail is then routed through holes drilled in the pin and out the back of the pin.

The gage arrangement for the lower R2 pin is the same as for the R1 pin, with eight uni-axial and four shear gages. The upper pin does not carry shear or bending. Although the pin carries only axial load, eight uniaxial gages are provided to average the pin stress to determine pin reaction.

10.5 F1 Load Pin

The F1 Connector will use an instrumented clevis pin to measure loads on the flexible connector. The pin will be fabricated, instrumented, and calibrated by a recognized load pin manufacturer. The pin will be provided with a low-profile, watertight wiring connector on the end of the pin and a 50-foot-long pigtail with mating connector. The instrumented pin will be waterproofed. This pin was developed based on conversations with a load pin provider, Transducer Techniques of Temecula, California.

The pin dimensions are given on Drawing 145. A maximum 0.5-inch hole is drilled on the pin centerline for the wiring. Independent strain gages are located on the two shear faces to measure tension/compression parallel to the connector axis (P(x)) and at 90° to the axis to measure vertical shear (V(y)). The independent gages will allow determination of different shear on the two connector sides, and hence, connector torsion about the connector axis and lateral bending about the vertical axis.

The gages are located in grooves machined into the pin at the shear surface. This reduces the pin size, but is acceptable since the loads anticipated during the tests are considerably less than the design loads. This is because the design loads are based on conditions such as beaching and long causeway yaw which will not be present in the test configuration.

Connector	Mating			Mated		
	V(y) (kips)	V(z) (kips)	M(z) (kip-ft)	P(x) (kips)	V(y) (kips)	V(z) (kips)
F1	25	9	NA	160	85	17
R1	74	26	1150	465	50	6
R2 lower pin	74	26	1150	465	50	6
R2 upper pin	NA	NA	NA	380	NA	NA

Table 10-1. Connector Pin Forces for Test Configurations

11 WEIGHT ESTIMATE

11.1 Introduction

The goal for weight of a typical test bed complete with connectors, as stated in the original Statement of Work, was 40 LT. However, due to the large increases in design loads subsequent to the original SOW, the preliminary weight estimate based on the 35% design was 71 LT. This weight was not only significantly higher than the stated goal, but it exceeded the 60 LT crane lift capacity available on Navy ships.

The 71 LT weight was still preliminary pending results of the structural analysis of the hull. Following the finite element analysis, and particularly since this weight was seriously over the goal and lift limits, the design of individual elements was reviewed and a redesign was completed based on the analysis results as a part of design/weight optimization.

11.2 Design Modifications

As a result of the higher than desired weights, a general review of the structure was performed to minimize weight where possible. Modifications and changes to the weight estimate are summarized below.

1. Reduce basic deck plate thickness to 0.25 inch: As discussed earlier, this implies permanent set in the deck under the maximum vehicle wheel load. NFESC concurred that this criteria was acceptable.
2. Reduce the basic hull side walls to 0.188 inch: This reduces weight but implies extra cost and effort to minimize warpage during fabrication.
3. Side wall and bottom stiffeners and frames: These were reviewed and generally changed to 0.188-inch-thick where possible. The frame was reduced from 8-inch fabricated tees to light 6-inch rolled tees.
4. Covers for deck openings have been added.
5. With the design complete, miscellaneous plates and details have been incorporated into the final estimate.

The first two proposed changes were reviewed within the context of the finite element analysis modifying top, bottom, and side wall plate thicknesses to also reflect analysis results. The initial design included substantial insert plates at areas of anticipated high stress to allow for global and local stresses. The analysis indicated that these could, in general, be reduced substantially. The final plate thicknesses are summarized as:

- The 0.25-inch top plate is acceptable over most of the deck. Near the ends some 0.5 and 0.75-inch plate is required and a 0.75-inch plate is required immediately around the notch for the middle R2 Connector.

- The bottom must remain at 0.25-inch thick with some minor insert plates. In order to make 0.188-inch plate work, the stiffener spacing would be so close that there would be no net weight saving.
- The side wall can generally be 0.188 inch if one extra stiffener is added near the bottom. This stiffener prevents axial buckling under global hull bending and also shortens the span to allow the plate to span under local hydrostatic loads.

11.3 Final Weight Estimate

The weight estimate has been revised to account for all the changes described above and reflects the final design of all components. The current value of a center test bed in the lift condition (without ISO connectors and with fenders and connectors installed) is estimated to be 62.7 LT. The corresponding weight for the raked test bed is estimated to be 62.2 LT. The detailed weight estimate is provided in Appendix C. Allowances have been reduced to reflect the level of detail of the estimate. Five percent is applied to the total weight to account for mill tolerance and welding. An additional five percent is included for details of plate cuts and stiffeners not explicitly included in the weight takeoff.

11.4 Potential Weight Reductions

Weight has been a major issue since early in the design. The design has been optimized to the specified criteria to the extent possible within the present scope of work. Some minor improvements are undoubtedly possible with additional effort, but the net change will be small. In addition, the weight may decrease somewhat in a prototype since only one type of rigid connector would be used. This would result in more efficient hull framing and load paths. Beyond this the only way to significantly reduce the weight further is to modify the criteria. There are two primary possibilities:

Integrate the hull instead of using individual pontoons. This would eliminate duplicate bulkheads and pontoon connectors, and most likely improve load paths and structural efficiency.

Reduce the criteria, which would result in smaller connector loads. This would not only reduce the weight of the connectors, but also possibly allow the test bed depth (and resulting weight) to decrease.

12 SPECIFICATIONS

Three specifications were prepared for this project and are included in Appendix B. The principal specification is LEAD-201, Process Specification for Fabrication and Inspection. This covers definition of materials, welding processes, and inspection associated with fabricating the test bed components. To the maximum extent possible, the specification makes use of standard commercial practices in steel fabrication. It assumes that the components could be fabricated by any qualified steel fabricator rather than be focused at a particular subgroup such as shipbuilders.

The second specification is a brief document to support high-strength castings required for mooring rings that will be welded into the sides of the test beds. This is LEAD-101, Specification for Steel Mooring Ring Castings.

The third specification is LEAD-202, Process Specification for Strain Gage Application. This specification defines the application and inspection of strain gages to the connector components. The gages are described but will be furnished by the Government.

No coating specification has been written since it is NFESC's intention to use a current Navy specification, No. 2B047-S3116-50-035, Revision A, Coating Requirements for Sealift Support Facilities Equipment. This is referenced in the fabrication specification.

13 CONCLUSIONS AND RECOMMENDATIONS

13.1 Conclusions

The main conclusion after having completed this detailed design effort is that the resulting test beds and appurtenances are very complex and will be a challenge to construct. The primary reasons for the complexity are the many configuration and operational criteria which impact the design and the small physical volume into which the resulting product must fit. Lift weight is at or over the limit for the test bed configuration.

A prototype system should see improvements simply by eliminating multiple connector types. The multiple connector types in one pontoon results in conflicting framing arrangements that cannot be optimized for either system. Other simplification should occur due to elimination of test requirements, such as elimination or modification of hatches and simplification of connectors by eliminating strain gage wiring.

Other improvements will largely be a function of test results which modify design criteria. The operational tests may also suggest changes to hawsepipes, marriage bridles and connector hardware which will simplify and lighten the final product.

13.2 Recommendations

Based on our experience in finalizing the design, the following recommendations are made. These should be considered for future versions of the system.

1. Provide for remote controlled cutting of marriage bridle if it becomes jammed into winch wraps from snap loading.
2. Use a constant tension winch to minimize snap loads due to dynamic response during mating. This would result in a simpler marriage bridle arrangement and a much safer system to operate.
3. Consider a different pontoon-to-pontoon (PC1) connector. This connector was not a major focus of this project and received relatively little attention. It may be that other designs would be more efficient and more fabricable, or that existing standard designs could be modified for the loads and geometry criteria for this system.
4. Based on fabrication and test experience, review the design for tolerance issues and modify tolerances accordingly. Although the design has been configured to allow as much fabrication as possible to proceed without close tolerance, there is still a significant amount of close tolerance fabrication required. For production runs of system components, the use of jigs may be more easily accommodated and individual surveying less desirable. Thus, the manner in which final tolerances are to be achieved should be considered again in a final system design.

14 GLOSSARY

Assembly Frame: A space frame removable structure for the R1 connector system that contains pin and guillotine connections.

Causeway Section: A series of assembled test beds, 24 ft x 120 ft (barge modules).

Connectors: Hinged or fixed connectors linking pontoons or test beds.

Flexible Connector: A hinged connector linking two causeway sections.

Flexible Extension: A rubber or similarly flexible material extending from the marriage bridle, R2 pin connector or flexible (F1) connector for the purpose of guiding the pin connector into its connection receptacle.

Guillotine Connector: A flat or tapered plate slotted to lock over a pin connector, inserted from the deck through slots to the connector pin location.

Internal Fendering Spring: For the R1 connector, a spring located inside the pin connector which acts as a fender during mating operations.

Marriage Bridle: A wire rope/chain system used to pull test beds toward each other in a controlled manner during the mating operation.

Mating: The operation during which two test beds are linked together.

Module: "Test bed" in a prototype system. Not applicable to this project.

Operating Condition: The condition of mating and operating mated test beds (barge modules) during Seastate 3 conditions.

Pin Connector: The extended pin which is routed into a receptacle and locked with a guillotine to form a connection between test beds.

Platform: Any assembly of test beds larger than 1 x 3.

Pontoon: An 8-ft-wide x 40-ft-long x 8-ft-high steel box assembled with pontoon connectors in groups of three to form test beds.

Pontoon Connectors: The connectors interlinking three pontoons to form a test bed.

Receptacle: The side of the connector which receives the pin, forming the connection.

Rigid Pin Connector: The pin connector for the R2 concept. Lower pin connectors have

Stabbing Pin Connector: The pin connector for the R1 concept.

Survival Condition: The maximum environmental condition for operating connected test beds, presently stated as Seastate 5 conditions.

Test Bed: A 24-ft-wide x 40-ft-long x 8-ft-high standardized barge structure assembled from three pontoons suitable for container ship transport and offloading. This is an experimental version of a “barge module” to be used for field test purposes.

15 REFERENCES

1. Hatch, G. H., Huang, E. T., Barthelemy, J. L. (1996). Calm Water Test of a Conceptual Flexible Connection System for Pontoon Platforms, Technical Memorandum TM-2208-AMP. Port Hueneme, CA, Aug 1996.
2. (1995) Amphibious Cargo Beaching (ABC) Lighter Development - Phase I, Kvaerner Masa Marine Inc., Report No. 969, Annapolis, MD, Dec. 1995.
3. (1995) Advanced Modular Lighterage/Platform Technology Development, M. Rosenblatt & Son, In. Report No. 2035.001. New York, NY, Dec 1995.
4. (1996) Chronos Palletwide Awakening, Containerization International, November 1996.
5. ISO 1161 Series 1 Freight Containers - Corner Fittings, 4th edition, 1984.
6. Cleat Design - BU. No.S1201-860099 rev. G Feb 1939.
7. Hynes, S. M., Conner, C. S. (1996) Preliminary Logistics Engineering Advanced Demonstration Test Plan for the Amphibious Cargo Beaching Lighterage Connection Systems, Technical Memorandum TM-2207-AMP. Port Hueneme, CA, Oct 1996.

APPENDICES

A DESIGN BASIS
B SPECIFICATIONS
C WEIGHT ESTIMATE
D STRUCTURAL ANALYSIS REPORT

APPENDIX A

DESIGN BASIS

Amphibious Cargo Beaching Lighter - Design Phase

Design Basis

Prepared for
Naval Facilities Engineering Service Center
Port Hueneme, CA 93043

by
Bechtel National, Inc.
50 Beale Street
San Francisco, CA 94119

Contract Number:
N47408-93-D-7001
D.O. 19

July 1997

Table of Contents

1. INTRODUCTION

2. OBJECTIVE

3. DESCRIPTION OF CONCEPTS

3.1 Overall Description
3.2 Rigid Connector Assembly 1 (R1)
3.3 Rigid Connector Assembly 2 (R2)
3.4 Flexible Connector Assembly (F1)
3.5 Marriage Bridle System
3.6 Miscellaneous Items

4. ENVIRONMENTAL DESIGN CRITERIA

5. DESIGN LOADS AND CONDITIONS

5.1 Global Loads
5.2 Local Loads

6. MATERIALS DEFINITION

7. STRUCTURAL DESIGN CRITERIA

8. STABILITY REQUIREMENTS

9. SAFETY REQUIREMENTS

10. APPLICABLE CODES

11. CLASSIFICATION

GLOSSARY

Assembly Frame: A space frame removable structure for the R1 connector system that contains pin and guillotine connections.

Causeway Section: A series of assembled test beds, 24'x120' (barge modules).

Connectors: Hinged or fixed connectors linking pontoons or test beds.

Flexible Connector: A hinged connector linking two causeway sections.

Flexible Extension: A rubber or similarly flexible material extending from the marriage bridle, R2 pin connector or flexible (F1) connector for the purpose of guiding the pin connector into its connection receptacle.

Guillotine Connector: A relatively flat plate slotted to lock over a pin connector, inserted from the deck through slots to the connector pin location.

Internal Fendering Spring: For the R1 connector, a spring located inside the pin connector which acts as a fender during mating operations.

Marriage Bridle: A wire rope/chain system used to pull test beds toward each other in a controlled manner during the mating operation.

Mating: The operation during which two test beds are linked together.

Module: "Test bed" in a prototype system. Not applicable to this project.

Operating Condition: The condition of mating and operating mated test beds (barge modules) during Sea State 3 conditions.

Pin Connector: The extended pin which is routed into a receptacle and locked with a guillotine to form a connection between test beds.

Platform: Any assembly of test beds larger than 1x3.

Pontoon: An 8 ft wide x 40 ft long x 8 ft high steel box assembled with pontoon connectors in groups of three to form test beds.

Pontoon Connectors: The connectors inter-linking three pontoons to form a test bed.

Receptacle: The side of the connector which receives the pin, forming the connection.

Rigid Pin Connector: The pin connector for the R2 concept. Lower pin connectors have flexible extensions.

Stabbing Pin Connector: The pin connector for the R1 concept.

Survival Condition: The maximum environmental condition for operating connected test beds, presently stated as Sea State 5 conditions.

Test Bed: A 24 ft wide x 40 ft long x 8 ft high assembled from 3 pontoons standardized barge structure suitable for containership transport and offloading. This is an experimental version of a “barge module” to be used for field test purposes.

1. INTRODUCTION

This document summarizes the technical data to be used in the design of the Amphibious Cargo Beaching (ACB) Lighter under Delivery Order 19. The information is based upon the provided Government Furnished Information (GFI) and discussions with Naval Facilities Engineering Service Center (NFESC) personnel.

Upon concurrence and approval by NFESC, this document will be distributed to all project staff to ensure consistency of design throughout the execution of the work. As such, it is intended to be used as the basis for all design aspects.

2. OBJECTIVE

Using Government provided conceptual designs and loads, perform final engineering design of four test beds (two center and two raked), including pontoons, pontoon connectors, rigid and flexible connectors between test beds and marriage bridles.

3. DESCRIPTION OF CONCEPTS

3.1 Overall Description

The design shall be based on a building block concept. Figure 3-1 shows an overview of one test bed (in this case raked). For the near term purpose of conducting full scale open ocean tests, the ACB Lighter in its assembled form will consist of three test beds, two raked and one center, forming one causeway section, as depicted in Figure 3-2. However, the design shall reflect the potential assembly of four modules longitudinally and three transversely (a 4x3 configuration). Potentially, three causeway sections could be further connected longitudinally to form a causeway ferry.

Each test bed shall be 24 ft wide by 40 ft long. In its assembled form, platforms will be 24 ft (one test bed) by 160 ft (four test beds) long. A single test bed shall consist of one middle and two side pontoons, each 8 ft deep x 8 ft wide x 40 ft long.

The assemblage of the test beds into a larger platform of desired size shall be via the use of connectors. Three types of test bed connector assembly concepts shall be designed and integrated into the test beds. The connectors, rigid and flexible, are referenced as R1, R2, and F1. The R represents the rigid connectors, F the flexible. A rigid connector shall be used to join the vertical faces of two test beds. The flexible connectors shall be used when connecting multiple causeways (raked ends of two test beds) allowing relative motion in the pitch direction. Test bed layouts are shown in Figure 3-3. Each of the pontoons shall be designed to be interchangeable with a like pontoon in another test bed while maintaining the layout requirements identified in Figure 3-3.

Assembly of individual pontoons via pontoon connectors to form a single test bed shall be done in a dry environment. However, the system shall have the capability of

assembling and disassembling the test beds into causeway sections in Sea State 3 conditions.

The assembly process begins the moment the test beds are launched from the delivery ship. A tug meets the test bed at the ship side taking over control of the test beds and tows it to an open site for further connection. The spring loaded stabbing pins are extended before starting mating operations. A pair of these tug and test bed combinations are brought together at roughly 40-foot separation. Messenger lines are passed between the test beds to lead the marriage bridle legs for initial connection. The tugs then pull the test beds away from each other to establish and keep a reasonable pretension on the bridle legs to avoid possible snap loads. Meanwhile the winch gradually rewinds the marriage bridle legs and leads the alignment pins into the receivers. At a short separation distance, the chain sections will roughly align the adjoining ends and reduce the relative heave between test beds. Further retraction in the bridle legs closes up the gap and the stabbing pins land on the side wall of the adjoining test beds if they do not find their respective matching receivers. In this case, the spring loaded pins work as bumpers to protect the test beds. At this moment, the pins undergo random motion and eventually find the shallow funnel access around the receivers. Further pulling together of the test beds brings them to complete contact at which point the guillotines are lowered on the stabbing pins and lock the two test beds together.

3.2 Rigid Connector Assembly 1 (R1)

The R1 connector assembly components shall be integrated into a compact unit that can be raised to deck level for maintenance, repairs or replacement. The R1 connectors on the test bed sides shall be identical to those on the ends.

Figures 3-4 through 3-6 show the conceptual layout and configuration of the R1 connector as defined by NFESC. The R1 concept is a set of unique spring-loaded stabbing pins, receivers and alignment pins with a marriage bridle system. The stabbing pins provide a dual function of cushioning the test beds during the mating operation when impacting each other via an internal fendering spring and providing the connection in the mated state. They are housed within a removable assembly frame. The marriage bridle is used to gradually bring the test beds together while aligning them for the connection.

The two large diameter stabbing pins are located on the vertical test bed face with a receiver either above or below depending on connector assembly orientation. Identical inverted connector assembly arrangements are located on opposite test beds. The stabbing pins shall be retractable for shipping, then extended, either prior to being put in the water or before the test beds are within a distance of possible collision in the water. In the event that the stabbing pins do not find the receivers, they will be pressed against the vertical surfaces and act as fenders to protect the test beds.

The alignment pins once extended from the alignment pin slots will be guided into the matching receiver to align the test beds. It is intended that the alignment pins shall substantially reduce relative motion between test beds while accommodating bending.

3.3 Rigid Connector Assembly 2 (R2)

Unlike the more extensive assessment and development work performed by the Government to date on the R1 connector system, there has been comparatively less work done on the alternative R2 connector. Therefore, more significant effort will be required to develop R2 to a final design stage. The purpose for the R2 connector is to have a back-up or alternative rigid connector concept to R1 as an insurance against unforeseen connection characteristics with the R1.

Figure 3-7 presents a very simple schematic layout of the R2 concept as developed to date. It consists of the following components (not all shown in Figure 3-6):

- bridle system with two-line rigging.
- contingency fenders to resist test bed impact during connection operations.
- rigid connector pins; lower connectors have flexible extensions to guide the connection.
- guillotine connectors to finalize the connection.

In this connector scheme, there are four connectors on each test bed face, the two lower connectors staggered relative to those above. They are stowed in one test bed, pulled into the adjacent test bed by chain to initially establish the connection, and then guillotine-connected in-place. The chain tension is released once the guillotine connectors have been installed. Unlike the R1 connector, there is no assembly frame housing the pins. The pin tensions are transferred directly in bearing to the supporting barge structure.

3.4 Flexible Connector Assembly (F1)

Figures 3-8 and 3-9 present the layout and conceptual configuration of the flexible connector assembly based on NFESC's work to date. The flexible connector assembly concept shall accommodate the large relative motion between the raked ends of two test beds at the initial stage of the connection and provide a smooth transition to lead the rigid portion into the receptacle. The F1 concept shall include a set of alignment pins with weldments, guillotines, and the marriage bridle system. The alignment pins shall guide the hinged weldment into the receiver.

3.5 Marriage Bridle System

A complete marriage bridle system shall be designed to pull two test beds together under controlled conditions while minimizing the snap loading on the connector assemblies during the connection. No winch shall be designed as it is assumed to be available as Government Furnished Equipment (GFE). A basic double drum winch shall be assumed in the operation with a constant tension winch as a last resort alternative.

Transverse hawsepipes for the marriage bridle system will be avoided in the center pontoon of each test bed, if possible.

3.6 Miscellaneous Items

In addition to the main structure components outlined in the above sections, the complete system consists of various miscellaneous items, such as:

- Pontoon Connectors
- Pontoon Access Holes
- ISO Fittings
- Lifting Attachments
- Mooring Cleats
- Corner Fendering

These items shall be designed in accordance with the requirements in NFESC's Statement of Work.

4. ENVIRONMENTAL DESIGN CRITERIA

The design loads provided by NFESC and summarized in Section 5 reflect two design environmental conditions, namely an operating condition and a survival condition. They reflect hydrodynamic analyses performed for head seas, beam seas and intermediate diagonal wave directions between head and beam seas in 15-degree increments.

Specifically, the following environmental conditions are applicable:

Operating Conditions:

- Mating Condition:

  Sea State 3 (Significant Wave Height = 3.50 ft to 5.00 ft)

- Mated Condition:

  Sea State 3 (Significant Wave Height = 3.50 ft to 5.00 ft)

Survival Condition:

- Survival Mated Condition:

  Sea State 5 (Significant Wave Height = 8.00 ft to 12.00 ft)

5. DESIGN LOADS AND CONDITIONS

The design of the ACB Lighter system shall reflect the loads provided by NFESC in the pertinent GFI. Per scope of work, no analytical work will take place during this phase of the design for the purpose of determining or confirming the loads to be applied to the structures. The only analysis to be performed will be a stress analysis to identify local load distribution in critical areas based on the global loads provided by NFESC.

5.1 Global Loads

5.1.1 Rigid Connectors

Global loads for purposes of designing the test bed structure and connector hardware consist of two components, wave induced loads and static, still water sagging loads from non uniform deck loads. These are added for use in design.

Wave induced loads are provided by NFESC in the form of section forces applied at the connector interface. These loads reflect two basic conditions, namely mating and mated (with payload). Mating loads occur only during the operational seasstate, while mated loads occur for both operational and survival conditions. Figure 5-1 defines the coordinate axes and wave direction. Global loads are given by section forces at connection locations, either test bed to test bed or pontoon to pontoon. The loads are for the entire assembly width and may be shared by one, two, or four connectors, depending on the specific interface. Wave load induced forces for test bed to test bed and pontoon to pontoon connector design are summarized in Tables 5-1 and 5-2 respectively.

The wave loads include both the effects of motion and global forces due to the effect of the differential buoyancy of the wave profile on the structure. Since all wave force calculations were performed assuming uniform deck load, the global bending due to non-uniform deck loads shall be added separately to the values in Tables 5-1 and 5-2. The conditions to be included when calculating these loads shall consist of the following:

For the 3x1 configuration (three test beds long by one wide) the following apply:

- Up to 14 containers 8 ft x 8 ft x 20 ft weighing 44,800 lb. each resting transverse to the assembly. These containers are assumed centered longitudinally when fully loaded and are loaded from one end only using a RTCH.
- Up to three M1A1 tanks. For three tanks they are assumed to be located with one centered on each test bed. For two, they are assumed to be located at the third points. For the case of one tank it is assumed to be located at the center. The tanks are assumed to be driven on/off one at a time so eccentric loads can develop. Each tank is assumed to be 12 ft wide by 26 ft long and weigh 62.5 LT.

For the 4x3 configuration (four test beds long by three wide) the following load case applies:

- One air cushion landing craft (LCAC) located anywhere on the center line. The unit is 81 ft long by 43.7 ft wide and weights 181.6 LT.

5.1.2 Flexible Connectors

Loads for designing the flexible connectors have been provided by NFESC based on experience with previous connectors and various operational conditions. These loads have been reduced to loads per connector and are summarized in Table 5-3.

5.1.3 Marriage Bridle

Based on available tug horsepower, assume the nominal tensioning load between test beds during mating is 10 kips. This load will then be adjusted to allow for variation in load due to relative vessel motion. Snap loads will be considered based on model tests.

5.2 Local Loads

In addition to the global loads on the structures during mating and mated conditions, the following local loads and conditions shall be considered in the design.

5.2.1 Stabbing Pin

In addition to bending loads applied to the stabbing pin once the pin is partially engaged in its receiver, the pin must be designed for lateral impact loads that can occur due to collision with between the pin and adjacent test bed during the mating operation. These impact loads are 32 kips applied transversely and 123 kips applied vertically at the pin tip. These loads are not concurrent.

5.2.2 Deck Loading

Deck loading shall reflect Rough Terrain Cargo Handling (RTCH) Considerations which includes complete vehicle with 40 ft top handler and 50,000 lb load. This results in an individual wheel load of 78,400 lbs over a 26 in x 32 in area.

5.2.3 Lift

The design shall consider lifting of pontoons for assembling into test beds and test beds in and out of the water. Lifting will be assumed to be via an ISO spreader bar or a four part lifting sling. All lift points shall be designed with a minimum safety factor of 6 based on the ultimate strength of the material. Since the slings will stretch significantly under loads approaching the safety factor, the load is assumed to be equally divided among sling legs.

5.2.4 Fendering

Corner fendering shall be provided per requirements in NFESC's Statement of Work. In lieu of more definitive criteria, 8 in x 8 in solid rubber bumpers will be provided. Springs in the R1 connecting pins shall be designed for a spring rate of 7.5 kips per foot and stroke of 2 ft.

5.2.5 Mooring

Mooring rings will be provided per requirements in NFESC's Statement of Work.

5.2.6 Hydrostatic Loads

The test bed side shell and bottom shall be designed for hydrostatic pressures equivalent to 8 ft head (deck awash).

6. MATERIALS DEFINITION

Efforts shall be made during the design phase to utilize structural steel conforming to ASTM Specification A-36. Higher strength steel will be considered, as applicable, if it is judged that A-36 steel results in either insufficient capacity or non-economical or weight impractical design. Attention will be given to ensure that material type and grade used is as consistent as possible to minimize material variations and complications in the fabrication process.

7. STRUCTURAL DESIGN CRITERIA

The design shall reflect working stress principles except as noted below. Allowable stresses will be as follows:

- <u>Operating Mating Condition</u>:

  Basic AISC allowables plus 1/3 increase.

- <u>Operating Mated Condition</u>:

  Basic AISC allowables.

- <u>Survival Mated Condition</u>:

  Basic AISC allowables plus 1/3 increase.

- <u>Lifting Condition</u>:

  Basic AISC allowables.

- Deck Plating Design

  Deck plate will be allowed to deform into a catenary shape and accept some reasonable deformation to accommodate the high local loads imposed by the RTCH unit.

Structure components shall be designed for the worst combination of applied load and allowable stress. For the mating condition (only), the structural assembly frame housing the R1 connector shall be designed to resist the ultimate capacity of the encased stabbing pin without damage to the supporting elements.

Although a specific material thickness increase is not specified for corrosion allowance, consideration shall be given throughout the design based on engineering judgment, particularly for the most critical members, to avoiding structural member utilization approaching design limits. Similarly, although fatigue evaluation to address cyclic load effects is beyond the scope of this work, consideration will be given conceptually and qualitatively towards minimizing stress concentrations, wherever applicable.

8. STABILITY REQUIREMENTS

No stability analysis will be performed.

9. SAFETY REQUIREMENTS

Throughout the design, consideration shall be given to safety related issues, particularly pertinent to the mating operation.

The potential of an automatic guillotine lock-in system will be addressed, particularly in light of the fact that the weight of the guillotine may be relatively high for a seaman to handle easily. Operational requirements shall also assume a one-hand seaman operation. Also, there should be no requirement for transfer of personnel across test beds prior to fully mated state. Attention will be given to establish a hawsepipe size on deck to minimize risk of accidentally getting a foot caught in it.

10. APPLICABLE CODES

The design of the test beds and connectors shall conform to AISC Working Stress guidelines, latest edition except for the design of the stabbing pin (pipe) which shall be based on API RP2A recommendations.

Welding for structural steel shall conform to the structural welding code, AWS D1.1, latest edition.

11. CLASSIFICATION

There are no special classification requirements. The design shall reflect basic AISC principles.

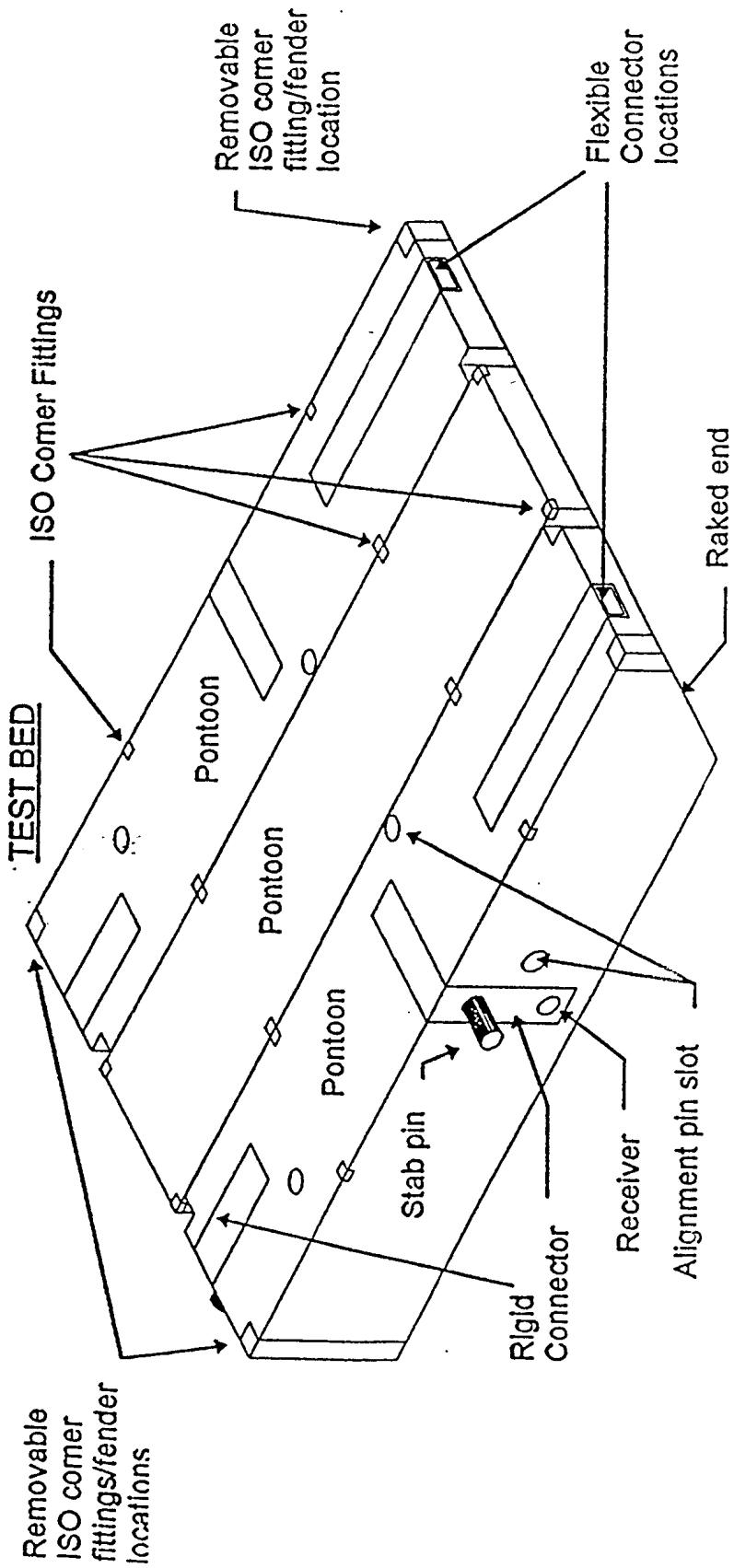

Figure 3-1. Raked Test Bed - Overview

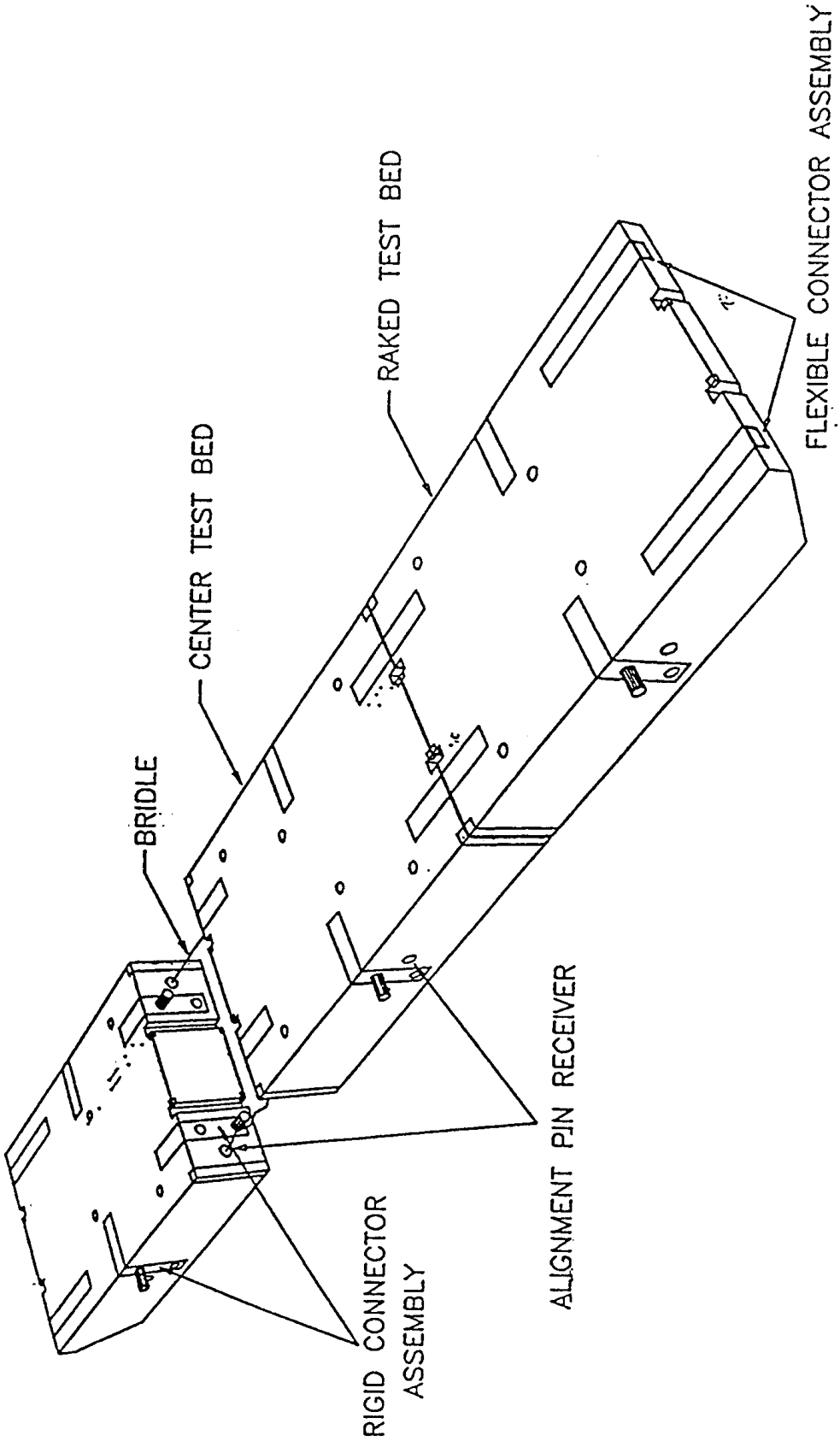

Figure 3-2. ACB Lighter Connection System

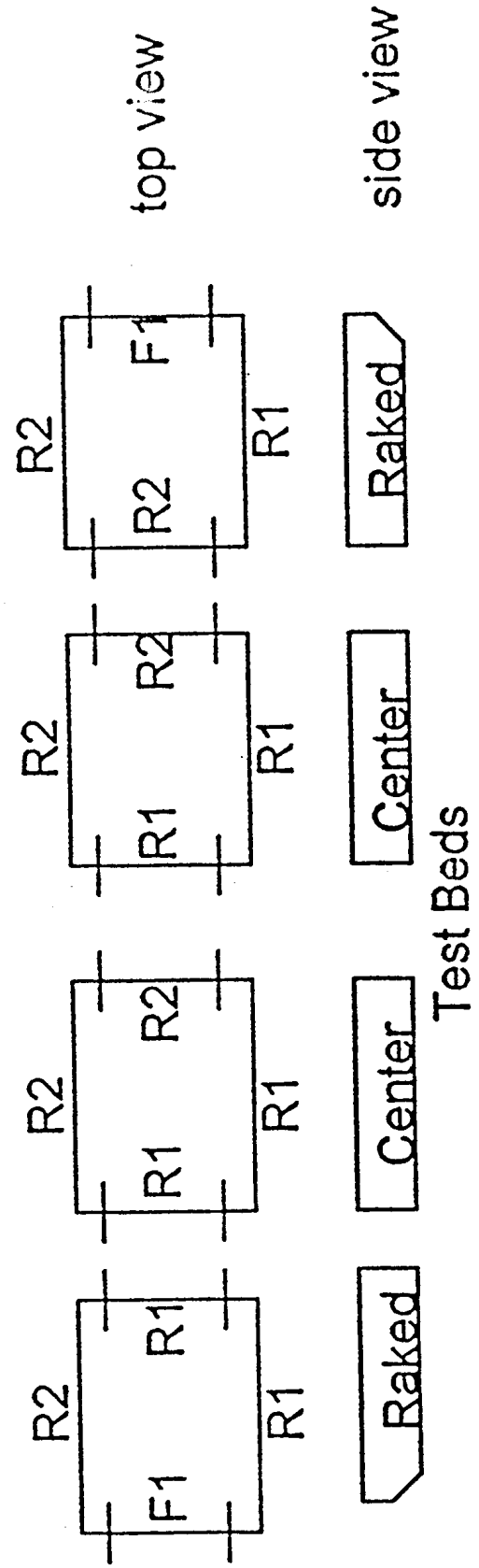

Figure 3-3. ACB Lighter Test Bed Layout

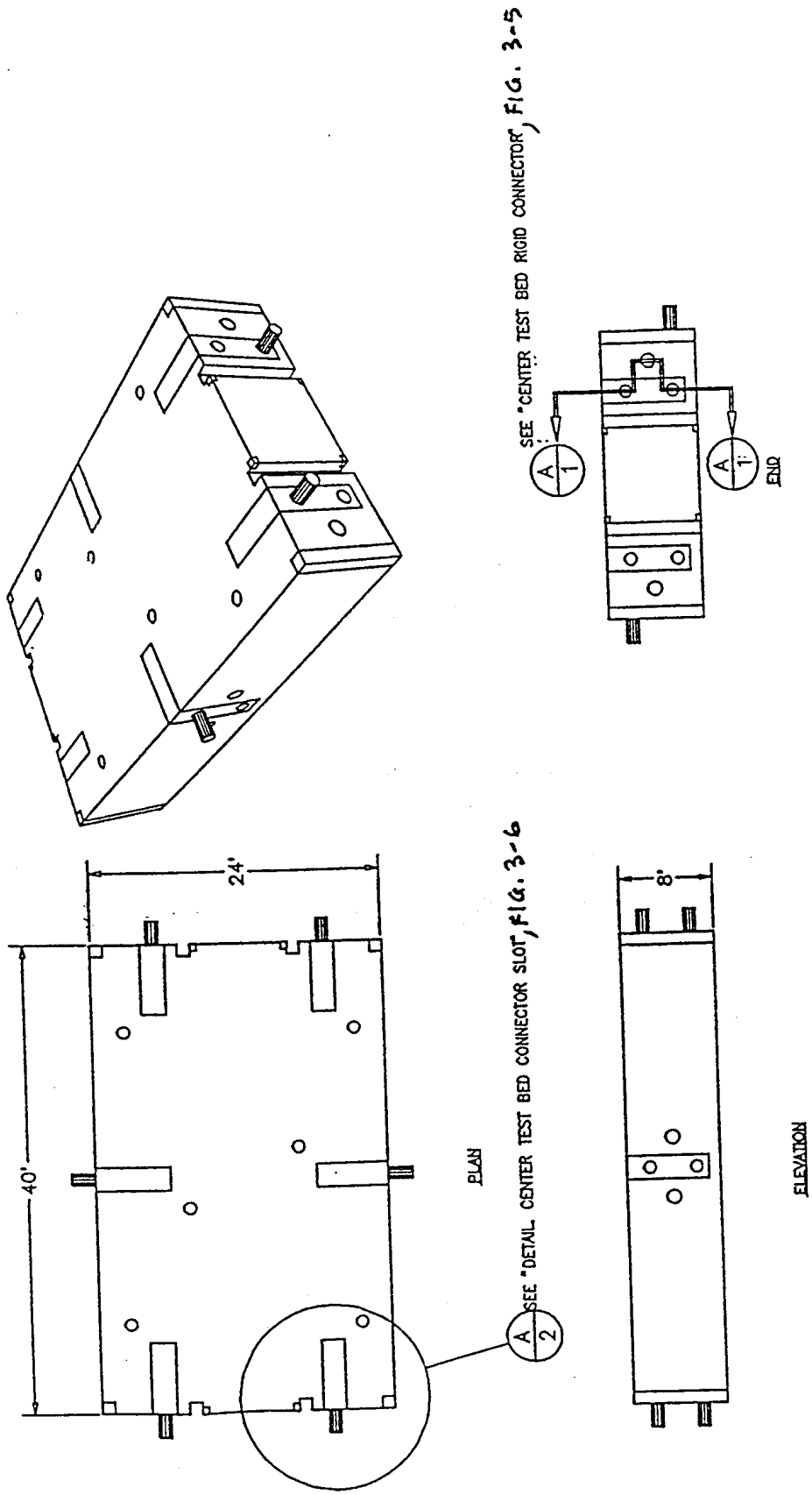

Fiaure 3-4. ACB Liahter Center Test Bed

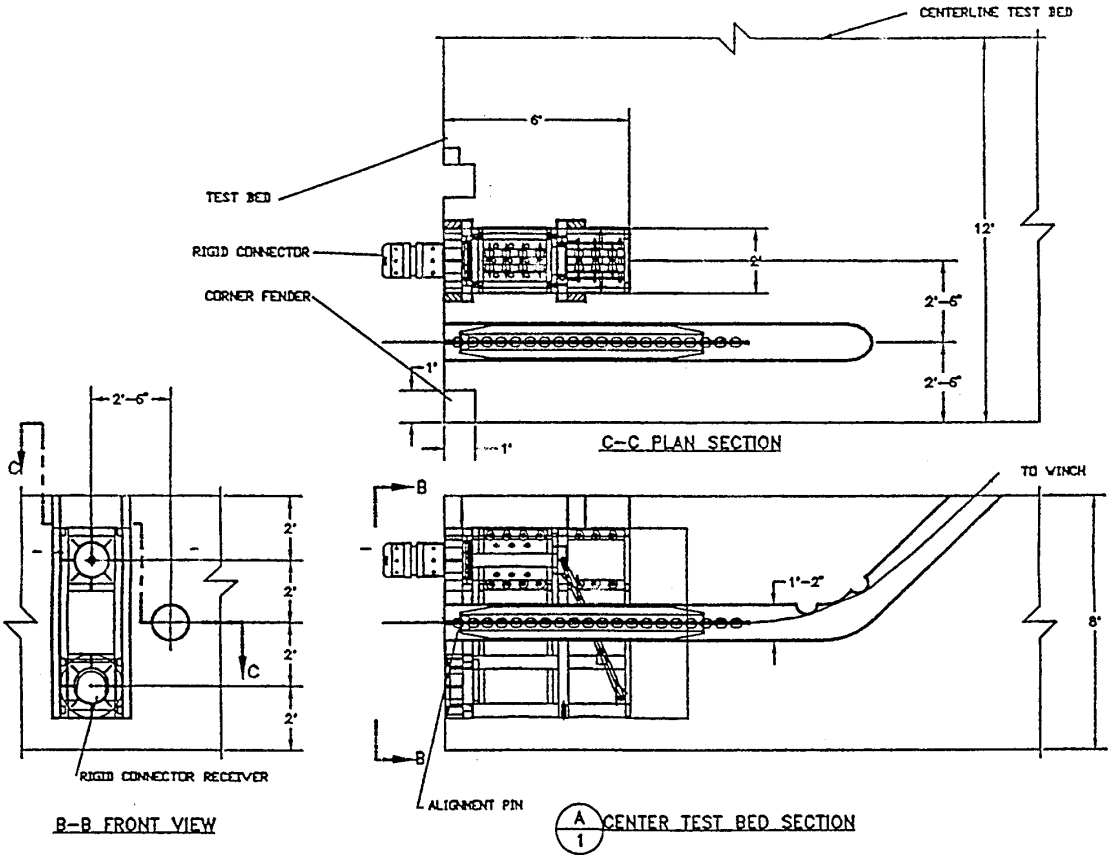

Figure 3-5. ACB Lighter Center Test Bed Rigid Connector

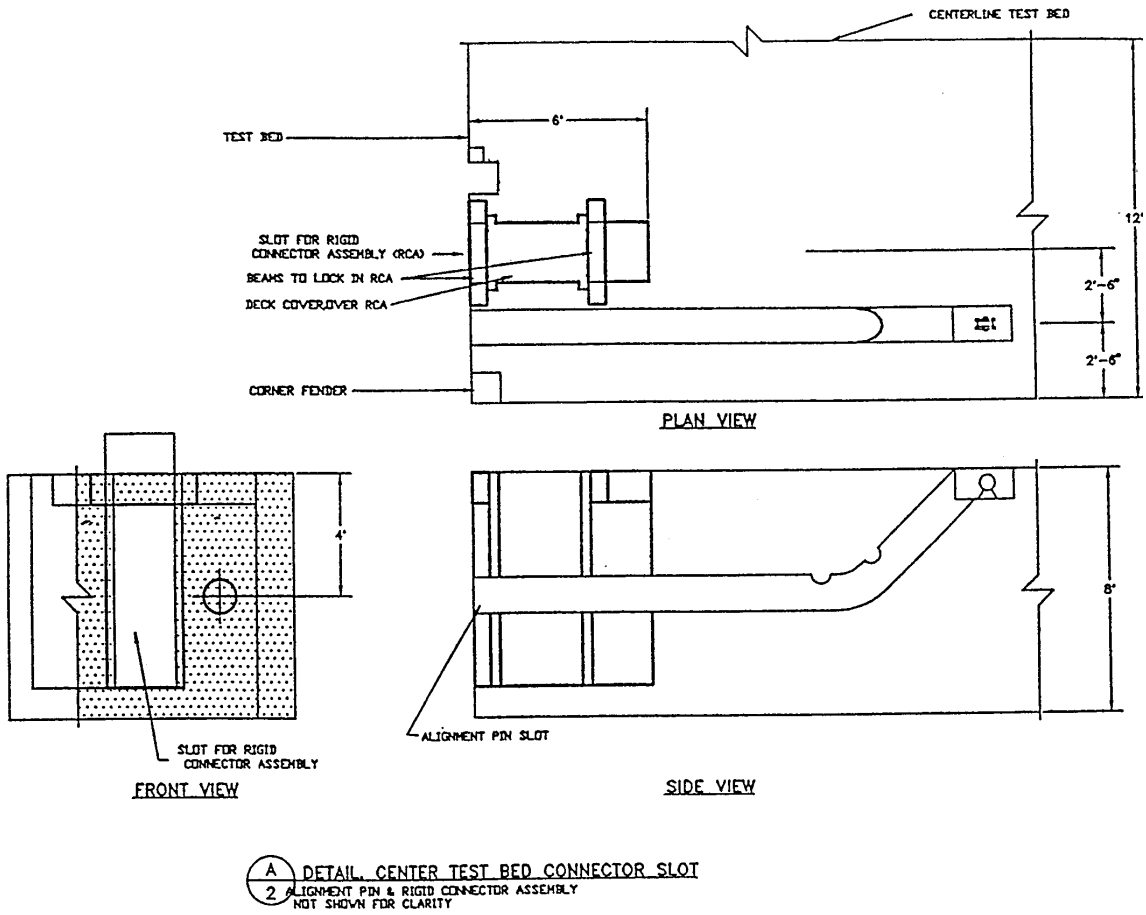

Figure 3-6. ACB Lighter Detail, Center Test Bed Rigid Connector Slot

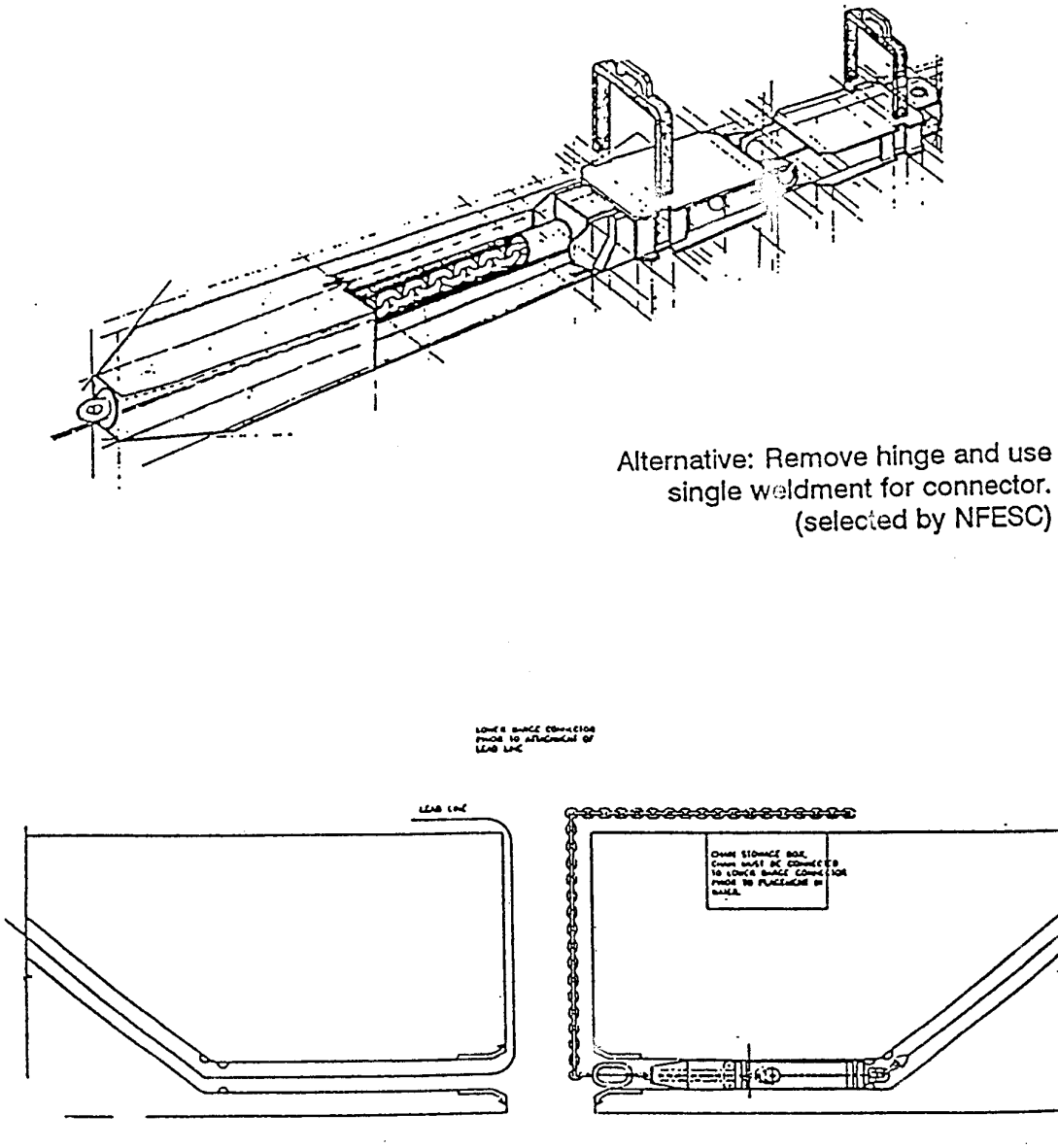

Figure 3-7. ACB Lighter, Rigid Connector R2 Conceptual Layout

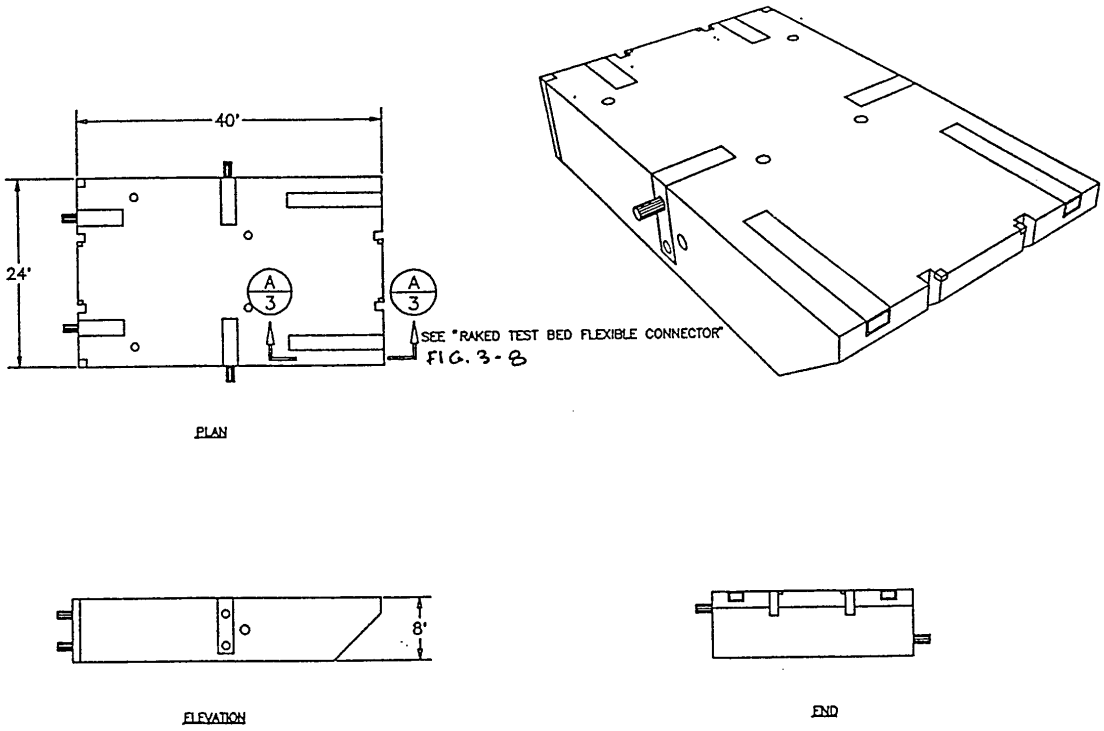

Figure 3-8. ACB Lighter Detail, Raked Test Bed

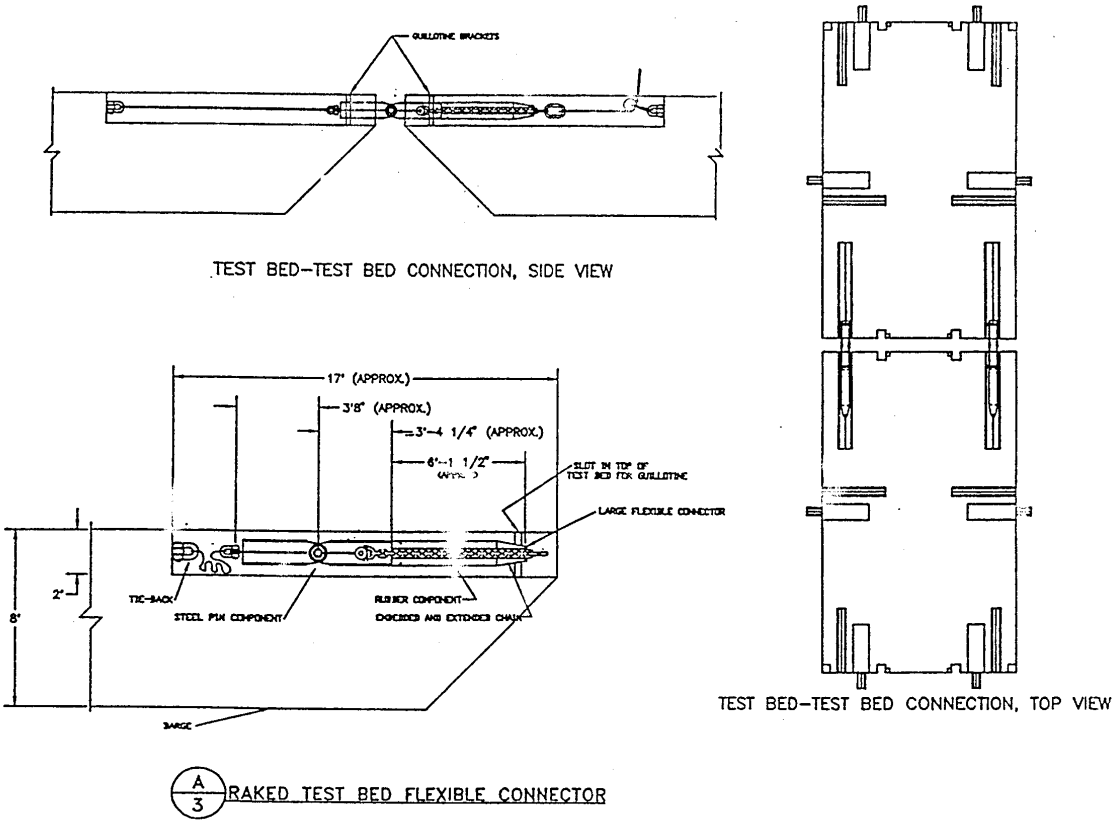

Figure 3-9. ACB Lighter Detail, Raked Test Bed Flexible Connector

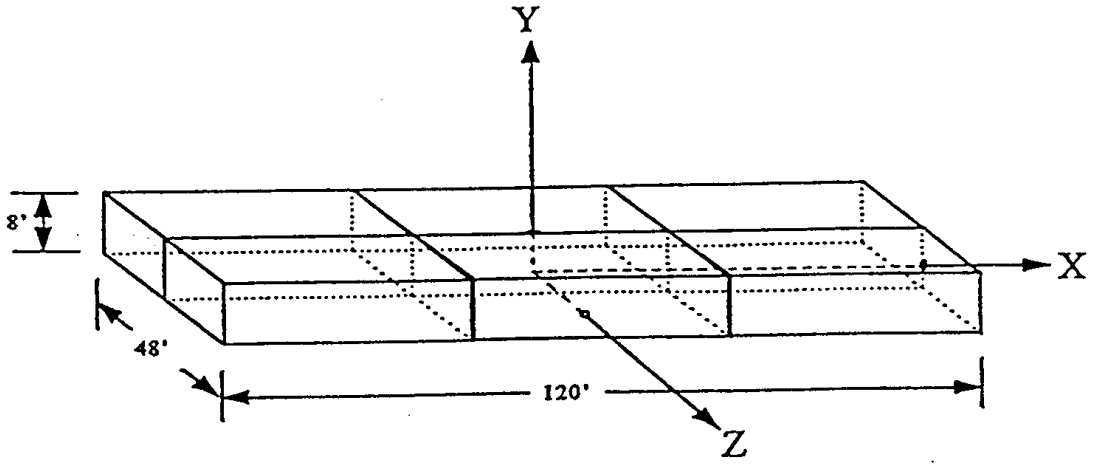

Illustration of a 3 x 2 Platform

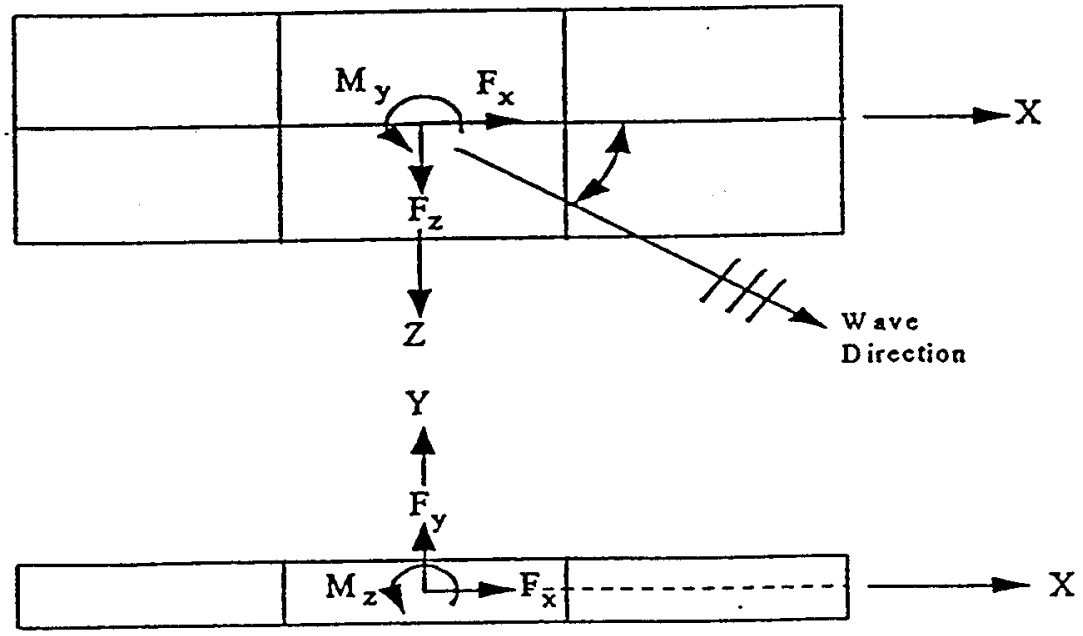

Definition of Internal Loads and Wave Direction

Figure 5-1. ACB Lighter Definition of Loads and Wave Direction

Table 5-1
Wave Loads (Section Forces)
Rigid Test Bed to Test Bed Connector

Reference			Load Condition	Sea State	Test Bed Arrange-ment	Dist. from Centerline (ft)***	No. of Units at Section	Section Forces		
*	Fig	θ°						F_y (k)	M_x (k-ft)	M_z (k-ft)
1	1, 2	0	Mating**	Operating	4x1	40	1	74	0	2300
2	3,4	0	Mated	Operating	3x1	20	1	32	0	1260
2	7,8	0	Mated	Survival	3x1	20	1	62	0	2400
1	5,6	0	Mated	Operating	4x3	0	3	59	0	7100
1	3,4	0	Mated	Operating	4x3	40	3	114	0	3800
1	5,6	60	Mated	Operating	4x3	0	3	17	3400	4400
1	3,4	60	Mated	Operating	4x3	40	3	68	2400	2800
3	5, 6	90	Mated	Operating	4x3	12	4	70	3400	0
1	9,10	0	Mated	Survival	4x3	0	3	113	0	16700
1	7,8	0	Mated	Survival	4x3	40	3	300	0	9200
1	9,10	45	Mated	Survival	4x3	0	3	42	7500	10500
1	7,8	45	Mated	Survival	4x3	40	3	180	5500	6200
3	7, 8	90	Mated	Survival	4x3	12	4	130	6000	0

* (1) NFESC memo of 16 Oct 1996
(2) NFESC memo of 19 Oct 1996
(3) NFESC memo of 1 Nov 1996
** Includes dynamic impact factor 1.5
*** Of assembled test beds

Table 5-2
Wave Loads (Section Forces)
Pontoon to Pontoon Connector

Reference			Load Condition	Sea State	Test Bed Arrange-ment	Dist. from Centerline (ft) **	No. of Units at Section	Section Forces		
*	Fig	θ°						F_y (k)	M_x (k-ft)	M_z (k-ft)
1	1, 2	90	Mated	Operating	4x3	4	4	30	2400	0
1	1, 2	60	Mated	Operating	4x3	4	4	12	900	6800
1	9, 10	90	Mated	Operating	4x3	20	4	85	4400	0
1	9, 10	60	Mated	Operating	4x3	20	4	30	1750	4400
1	13, 14	90	Mated	Operating	4x3	28	4	76	4400	0
1	13, 14	60	Mated	Operating	4x3	28	4	30	1800	2600
1	3, 4	90	Mated	Survival	4x3	4	4	55	4200	0
1	3, 4	60	Mated	Survival	4x3	4	4	25	2000	16200
1	11, 12	90	Mated	Survival	4x3	20	4	170	8500	0
1	11, 12	60	Mated	Survival	4x3	20	4	80	4200	11300
1	15, 16	90	Mated	Survival	4x3	28	4	150	8500	0
1	15, 16	60	Mated	Survival	4x3	28	4	70	4200	6600

* (1) NFESC memo of 1 Nov 1996
** Of assembled test beds

Table 5-3
Design Loads (Connector Forces)
Flexible Test Bed to Test Bed Connector

Configur-ation	Load Condition	Connector Forces					
		F_x (k)	F_y (k)	F_z(k)	M_x (k-ft)	M_y (k-ft)	M_z (k-ft)(6)
Beached*	Operating	300(1)	173(2)	62.5(3)	0(4)	(5)	0
Beached*	Survival	300(1)	183(2)	62.5(3)	0(4)	(5)	0
At Sea**	Operating	59.5(7)	57.6(8)	10.5(9)	(10)	(5)	0
At Sea**	Survival	144(7)	121(8)	20(9)	(10)	(5)	0

* 1 wide causeway per NFESC memo of 16 Oct 1996
** RRDF 80x72 per Flexible Connector Table Note 4 of NFESC memo of Oct 1996
(1) Axial load from yaw moment due to unbeaching per telephone clarification 15 Oct 1996.
(2) Vertical shear F_y (325 kip for beached lighter) divided by 2 connectors plus torsion Mx (200/400kip-ft respectively for 4x1 unit) divided by 19.3 ft. between connectors
(3) Global force divided by two connectors
(4) No local torsion is considered
(5) Local moment is determined from F_z
(6) Hinge pin provided, thus no moment
(7) Axial force F_x (44/ 65 kip respectively) divided by 2 plus yaw M_y (2600 /7700 kip-ft) divided by 69.3 ft between outside connectors, assuming only two end connectors carrying load (due to tolerances)
(8) Vertical shear F_y (17/20 kip respectively) divided by 2 assuming only two end connectors carrying load (due to tolerances) plus torsion M_x (3400/7700 kip-ft) divided by 69.3 ft between outside connectors
(9) Lateral shear force (21/40 kip respectively) divided by 2 assuming only two end connectors carrying load (due to tolerances)
(10) As determined from Fy assuming shear imposes local torsion

APPENDIX B

SPECIFICATIONS

SPECIFICATION
FOR
STEEL MOORING RING CASTINGS
FOR
AMPHIBIOUS CARGO BEACHING LIGHTER
LOGISTICS ENGINEERING ADVANCED DEMONSTRATION

Contract No. N47408-93-D-7001

Delivery Order No. 019

NAVAL FACILITIES ENGINEERING SERVICE CENTER

PORT HUENEME, CALIFORNIA 93043

Prepared by: R. Steigerwald

Reviewed by: _____

Approved by: _____

Date: 6/12/97

CONTENTS

Section		Page
1.0	SCOPE	1
2.0	APPLICABLE DOCUMENTS	1
3.0	MATERIAL	1
4.0	MARKINGDRAWINGS	2
5.0	SHIPPING	2

SPECIFICATION 101
STEEL MOORING RING CASTINGS
FOR
AMPHIBIOUS CARGO BEACHING LIGHTER
LOGISTICS ENGINEERING ADVANCED DEMONSTRATION

1.0 SCOPE

1.1 This specification covers steel castings for the mooring rings for the Amphibious Beaching Lighter. This is application requires a material that has a minimum yield strength of 70 ksi and that can be welded without excessive preheat and without postweld heat treatment.

2.0 APPLICABLE DOCUMENTS

2.1 The following standards form a part of this specification to the extent referenced herein. The issues of these documents shall be the revisions in effect at the time of the order.

2.2 ASTM

A148 Standard Specification for Steel Castings, High Strength, for Structural Purposes

A488 Standard Practice for Steel Castings, Welding, Qualifications of Procedures and Personnel

A700 Standard Practice for Packaging, Marking and Loading Methods for Steel Products for Domestic Shipment

A781 Standard Specification for Castings, Steel and Alloy, Common Requirements, for General Industrial Use

A915 Standard Specification for Steel Castings, Carbon and Alloy, Chemical Requirements Similar to Standard Wrought Grades

2.3 ASME

Section IX Welding and Brazing Qualification

3.0 MATERIAL

3.1 The material shall be Grade SC 8620 of ASTM A915 or a material proposed by the seller that meets the mechanical requirements given below. Any alternative

material must have weldability equivalent to SC 8620. Grade 105-85 of ASTM A148 is acceptable as long as the weldability requirement is met.

3.2 The seller shall submit any alternative compositions to the buyer for approval.

3.3 The castings shall be quenched and tempered. The mechanical properties shall conform to the requirements of the following table.

Tensile Strength min, ksi	**Yield Strength min, ksi**	**Elongation, min, %**	**Reduction of Area min, %**
100	70	17	35

3.4 The dimensions of the castings shall conform to those given in Figure 1.

3.5 The manufacturing, testing and quality of the castings shall conform to the requirements of ASTM A781 and A915.

3.6 The castings shall have the head and gates removed and shall have all sand, scale and fins removed. Any padding added by the foundry to provide directional solidification shall be removed. When thermal cutting or scarfing is used for metal removal, it shall be done prior to the final heat treatment. Chills and chaplets shall not remain with the casting.

3.7 Repair of castings by welding is permitted in conformance with A915; however, the seller shall submit his welding procedures to the buyer for approval. All welding must performed by welders qualified to A488 or ASME Section IX. Defects not requiring welding may be ground or chipped out provided that the width of the defective area is 3 times its depth and is gradually tapered into the casting. Design thickness shall not be violated,

4.0 MARKING

4.1 The castings shall be marked in accordance with Supplementary Requirement S8 of A781.

5.0 SHIPPING

5.1 The castings shall be shipped in accordance with Section 14 of A700.

PROCESS SPECIFICATION
FOR
FABRICATION AND INSPECTION
FOR
AMPHIBIOUS CARGO BEACHING LIGHTER
LOGISTICS ENGINEERING ADVANCED DEMONSTRATION

Contract No. N47408-93-D-7001

Delivery Order No. 019

NAVAL FACILITIES ENGINEERING SERVICE CENTER

PORT HUENEME, CALIFORNIA 93043

Prepared by: R. Steigerwald Reviewed by: _____

Approved by: _____ Date: 6/12/97

CONTENTS

Section		Page
1.0	GENERAL	1
2.0	REFERENCED DOCUMENTS	1
3.0	DEVELOPMENT OF DRAWINGS	2
4.0	FABRICATION AND WORKMANSHIP	3
5.0	MATERIALS	4
6.0	WELDING	5
7.0	WELD QUALITY AND INSPECTION	7
8.0	HEAT STRAIGHTENING	8
9.0	PONTOON TESTING	8
10.0	COATINGS	8

PROCESS SPECIFICATION 201
FABRICATION AND INSPECTION
FOR
AMPHIBIOUS CARGO BEACHING LIGHTER
LOGISTICS ENGINEERING ADVANCED DEMONSTRATION

1.0 GENERAL

1.1 This Specification, together with the contract drawings, defines fabrication of steel pontoons and connectors which will be assembled into test beds for at sea system testing of an advanced Navy causeway system. The fabrication includes rectangular and raked pontoons, inter-pontoon connectors, rigid and flexible test bed connectors, and rigging and hardware required to operate and test the system.

The design differs from typical barge fabrication concepts in several respects. For example, the structural system is more complex and includes heavy components due to criteria beyond normal barge design criteria including high local deck loads, very high local connection loads, and geometry suitable for ISO shipping requirements. Since the various components will be assembled into test beds and causeway sections at sea, tolerances of mating pieces are critical. Tolerances are defined on the drawings and must be met. Fabrication shall include the required surveying and any jigs or forms necessary to hold any of the components within the specified tolerances. In addition, all components will be trial fit at the fabricator's facility prior to acceptance and shipping.

1.2 The test beds and connectors shall be of all welded steel fabrication. To meet the design criteria the components include several steel types. The grade of steel to be used in any part of the structures is specified in Section 5.0 and on the applicable drawings. Fabrication and inspection requirements for all steel types are defined in this specification. All material, workmanship, fabrication, procedures, and welding shall meet first-class shipbuilding and structural steel fabrication practices and comply with the codes referenced in this specification.

2.0 REFERENCED DOCUMENTS

2.1 The following standards form a part of this specification to the extent referenced herein. The issues of these documents shall be the revisions in effect at the time of the order.

2.2 ASTM

A36 Standard Specification for Carbon Structural Steel
A53 Standard Specification for Pipe, Steel, Black and Hot-Dipped, Zinc Coated, Welded and Seamless

A500 Standard Specification for Cold-Formed Welded and Seamless Carbon Steel Structural Tubing in Rounds and Shapes
A514 Standard Specification for High-Yield Strength, Quench and Tempered Alloy Steel Plate, Suitable for Welding
A517 Standard Specification for Pressure Vessel Plates, Alloy Steel, High-Yield Strength, Quench and Tempered
A540 Standard Specification for Alloy-Steel Bolting Materials for Special Applications
A572 Standard Specification for High-Strength Low-Alloy Columbium-Vanadium Structural Steel
A656 Standard Specification for Hot-Rolled Structural Steel, High-Strength Low-Alloy Plate with Improved Formability
A852 Standard Specification for Quench and Tempered Low-Alloy Steel Plate with 70 ksi [485 MPa] Minimum Yield Strength to 4 in. [100 mm] Thick

2.3 AWS (American Welding Society)

D1.1 Structural Welding Code - Steel

2.4 ASME (American Society of Mechanical Engineers

Section IX Welding and Brazing Qualification

2.5 API (American Petroleum Insitute)

5L Specification for Line Pipe

2.6 Project Specifications

Specification No. 2B047-S3116-50-035, Rev A, Coating Requirements for Sealift Support Facilities Equipment

3.0 DEVELOPMENT OF DRAWINGS

3.1 The design is defined by the contract drawings. The Subcontractor shall use these drawings as the basis for preparing working drawings.

3.2 Fabrication shall conform to the design drawings in all respects. If the Subcontractor determines that a detail cannot be fabricated as shown on the contract drawings, whether due to constructability, congestion, sequencing or welding access, he shall propose alternatives for consideration. However, no modifications to the design are to proceed without prior written approval.

3.3 All working/fabrication drawings shall be reviewed and marked “Released for Fabrication” by the Contractor before work on that component commences. Drawings shall be submitted to the Contractor in accordance with the Paragraph

"Working Drawings" of the Special Conditions and in accordance with the fabrication schedule required by the Special Conditions.

4.0 FABRICATION AND WORKMANSHIP

4.1 Each pontoon shall have the size, shape, steel grade, scantlings, and compartmentation as shown on the contract drawings.

4.2 Workmanship shall meet the standard of first-class structural and shipbuilding practice. Plating shall be erected fair and free of waviness as required by the specified tolerances. Beams, frames, girders, etc., shall be installed to the dimensions and tolerances shown on the contract drawings. Care has been taken to reduce the size and number of openings made in the structure for access or otherwise to a minimum. No additional openings shall be cut in the primary structure that have not been detailed on the working drawings and approved thereon.

4.3 During fabrication and erection of the components, dimensional control shall be maintained in accordance with the drawings. If specified tolerances cannot be met, the Contractor shall be notified immediately and Contractor and Subcontractor shall jointly develop a suitable alternate approach.

4.4 All components shall be trial fit. For each outboard pontoon removable ISO corner fittings shall be installed and ISO tolerances verified. Once ISO fittings have been checked they shall be removed and corner fender units installed. Connectors shall be assembled and operation and tolerances verified. Connectors shall then be installed into pontoons and pontoons assembled into test beds. The test beds shall then be assembled into lighter units in the different arrangements shown on Drawing No.16. If components do not fit the Subcontractor shall develop a remediation plan and submit it to the Contractor for approval. Corrective measures shall then the taken and the trial fit performed again. This process will continue until successful fit up is achieved. All pieces shall be successfully trial fit. After trial fitting all pieces shall be disassembled into individual components for shipping.

4.5 The Subcontractor shall fabricate one R1 connector complete with all components and verify operation and fabrication sequence prior to fabricating the remaining R1 connectors. If there are any issues with specified tolerances, operation, or fabrication sequence, the Contractor shall be notified immediately and Contractor and Subcontractor shall jointly develop a suitable correction.

4.6 The Subcontractor shall develop an erection plan and procedure and submit them to Contractor for review prior to fabrication. The procedure shall minimize stresses built-in to the fabricated components. Temporary erection stresses shall be held to a minimum. The procedure shall include such items as:

(1) Support of the pontoons
(2) The size and weight of subassemblies

(3) The order of erection of the subassemblies
(4) Any temporary supports used during erection
(5) The required degree of completeness of the welding prior to erection of the next piece.
(6) Location and details of lifting padeyes or temporary members used in erection of major subassemblies.
(7) Center of gravity of all components.

Two weeks before installing prefabricated assemblies or subassemblies, the Subcontractor shall advise the Contractor who may then elect to witness and inspect the installation.

4.7 Records of the surveys of all control points on hull and connectors shall be submitted to the Contractor for information including identification and resolution of any non-conformances discovered during the survey process.

4.8 All pontoons, connectors, ISO assemblies, and fender assemblies shall be weighed and individual weights reported to the Contractor.

5.0 MATERIALS

5.1 The intention is to give the Subcontractor the maximum flexibility in the procurement of materials, consistent with good commercial practice. The design of the Lighter is based on the strength characteristics and weldability of the materials listed below. The Subcontractor may propose alternative materials as long as they have the required strength and weldability. The strength levels are minimums; stronger materials may be proposed.

5.2 Type 1 Steel shall be ASTM A36 fully killed and made to fine grain practice (Supplementary Requirement S91).

5.3 Type 2 Steel shall be ASTM A572, Grade 50 fully killed and made to fine grain practice (Supplementary Requirement S91).

5.4 Type 3 Steel shall be ASTM A656, Grade 70; ASTM A852 or API 5L, X70. Type 4 Steel may be substituted for Type 3 Steel.

5.5 Type 4 Steel shall be ASTM A514 or ASTM A517.

5.6 Type 5 Steel shall be ASTM A540, Grade B23, Class 1.

5.7 Structural Tubing shall be ASTM A500, Grade B.

5.8 Pipe shall be ASTM A53. When no standard pipe size is available, the sections may be fabricated from Type 1 Steel.

5.9 All welding materials shall meet the mechanical properties required by the base metal.

5.10 All materials shall be new stock and free from injurious defects.

5.11 All materials used in load bearing applications shall be clearly identified by a durable marking system meeting the approval of the Contractor. The system shall provide for marking each piece as it is cut from a main member. The steel shall be marked for traceability to a mill test report or certificate of conformance. Copies of the test reports and certificates shall be available to the Contractor's inspector.

6.0 WELDING

6.1 All welding shall be done in accordance with AWS D1.1 (the Code).

6.2 American Society for Welding symbols at each joint shall provide the details of welding and, in the tail of the arrow, identify the welding procedure specification (WPS). Alternatively, a separate drawing (weld map) may be used to detail each joint configuration as above.

6.3 Submittal Of Procedures And Qualifications

6.3.1 Procedures for welding, non-destructive examination (NDE), control and storage of filler material, repair plans and heat straightening must be submitted for review both against Code requirements and for suitability for each intended application.

6.3.2 Welding procedures shall be in accordance with the requirements of the Code. The procedure qualification report (PQR), if required, shall be submitted with the WPS. Procedures and personnel qualified to ASME Section IX are acceptable in lieu of qualification to AWS D1.1. Personnel qualifications will be verified at the worksite.

6.3.3 For repair of a weld, either the original WPS or one originally submitted as a designated repair WPS shall be used.

6.3.4 Repair plans that use welding for repair of welds or base metals shall be submitted for review prior to use. A repair plan shall include the following:

(a) The method of defining the type and the extent of the defect.

(b) Methods used for removing the defect and testing conducted to ensure that the defect has been removed.

(c) Welding procedure employed and NDE methods used to inspect the completed repair.

6.4 Welding Process Limitations

Only the following welding processes shall be used, and they shall be subject to the limitations listed .

6.4.1 Shielded metal arc welding (SMAW)

(a) Low hydrogen electrodes are required for carbon steel over 3/4 inch thick and for all alloy steels.

6.4.2 Gas metal arc welding (GMAW)

(a) Short circuiting transfer is limited to materials of 1/4 inch maximum thickness.

(b) When welding steel greater than 1/4 inch thick in other than 1G, 2G, 1F or F positions, pulsed arc power sources shall be used.

6.4.3 Flux Cored Arc Welding (FCAW)

6.4.4 Submerged Arc Welding (SAW)

(a) Solid wire electrodes which contain all essential alloys shall be used.

(b) Neutral flux shall be used.

6.5 Welding Filler Materials

6.5.1 Welding materials shall be selected so that the deposited weld metal is similar in chemical composition and not significantly harder or stronger than the base material.

6.5.2 As a minimum, the storage, baking and drying of covered electrodes, flux cored electrodes and fluxes shall be as recommended by the manufacturer.

6.5.3 Metal cored electrodes shall not be used.

6.5.4 Low hydrogen covered electrodes shall have an AWS hydrogen designator of H4, H4R, or M.

6.5.5 FCAW electrodes shall deposit weld metal containing not more than 8 ml diffusable H_2/100g of deposited weld metal.

6.6 General Welding Requirements

6.6.1 All welding shall be protected from wind, rain and other harmful weather conditions which may affect weld quality.

6.6.2 All surfaces to be welded shall be dry and substantially free of mill scale, oil, grease, dirt, paint, galvanizing, and other contaminants.

6.6.3 Weld bevel preparations for alloy steels shall be machined or ground back to bright metal if they have been flame or arc cut.

6.6.4 Where full penetration joints are welded from both sides, the first pass shall be back-chipped, ground or arc-gouged to sound metal before welding the second side. This requirement shall be stated on the WPS.

6.6.5 Each layer shall be complete prior to starting the next one (no block welding).

6.6.6 Vertical welding shall be vertical up unless approved otherwise by Contractor for each specific application.

6.7 Preheat And Interpass Temperatures

6.7.1 Preheat temperature shall be in accordance with the Code except that Code recommended minimum preheat temperatures shall be mandatory. Preheat requirements shall apply to all welding, including tack welding and welding of

temporary attachments. Preheat requirements also apply to all thermal gouging and cutting operations. Preheat shall be maintained a minimum of 3 inches on either side of the joint.

6.7.2 For quenched and tempered steels, manufacturer's requirements and limitations on welding and cutting/gouging in terms of preheat/interpass temperature, heat input, technique and methods shall be followed.

6.7.3 For welds requiring preheating, the weld joint shall be completed with no intermediate cooling except that cooling under an insulating blanket is permitted provided at least 30 percent of the joint depth has been filled, and provided that applicable documents do not specify more stringent requirements.

6.7.4 Preheat shall be determined by temperature indicating crayons, contact pyrometers or other equally suitable means.

6.7.5 If oxy-fuel torches are used for preheating, the torch tip shall be appropriate for the work (*i.e.*, a "rosebud," not a cutting or welding tip).

7.0 WELD QUALITY AND INSPECTION

7.1 Each layer of welding shall be smooth and free of slag inclusions, porosity, excessive undercut, cracks and lack of fusion prior to beginning the next layer. In addition, the final weld layer shall be sufficiently free of coarse ripples, nonuniform bead patterns, high crown and deep ridges to permit the performance of any required inspection. All arc strikes, starts, and stops shall be confined to the welding groove or shall be removed by grinding.

7.2 All welds shall be visually inspected. The acceptance criteria shall be those given in the Code for cyclically loaded nontubular connections.

7.3 All complete joint penetration welds in Type 3 and Type 4 steels shall inspected by surface and volumetric methods. The surface examinations shall be by either the liquid penetrant or the magnetic particle method. The volumetric inspections shall be by either the radiographic or the ultrasonic method. All examinations shall be conducted in accordance with the Code. The acceptance criteria shall be those given in the Code for cyclically loaded nontubular connections.

7.4 Examination and inspection reports, shall be available to Contractor's representative.

7.5 Weld extension tabs shall be used for groove welds, and shall be removed.

7.6 Temporary welds used for construction aids shall be removed. The removal area shall be ground smooth and flush and be inspected by the same methods required for fillet welds.

8.0 HEAT STRAIGHTENING

Members distorted by welding shall be straightened by mechanical means or by carefully supervised application of a localized heat. The temperature of heated areas of the primary structure as measured by approved methods shall not exceed 595 degrees C for quenched and tempered steel nor 650 degrees C (a dull red color) for other steels. The part to be heated for straightening shall be substantially free of stress and from external forces, except those stresses resulting from the mechanical straightening method used in conjunction with the application of heat.

Special cases and applications will be considered on an individual basis.

9.0 PONTOON TESTING

9.1 Each compartment shall be individually leak tested with internal air pressure and soap film and proven tight.

9.2 Compartment testing procedure and pressure level shall be approved by the Contractor before commencement of such tests. Each compartment shall be inspected for indications of structural deformation at a pressure equal to 80% of required test pressure before application of full test pressure.

10. COATINGS

All fabricated items shall be coated in accordance with Section 2.6. Pontoons shall be coated on the outside only. Hawsepipes shall be coated inside to the most practical extent possible. Connector assemblies and subassemblies shall be coated unless noted otherwise on the design drawings.

PROCESS SPECIFICATION
FOR
STRAIN GAGE APPLICATION
FOR
AMPHIBIOUS CARGO BEACHING LIGHTER
LOGISTICS ENGINEERING ADVANCED DEMONSTRATION

Contract No. N47408-93-D-7001

Delivery Order No. 019

NAVAL FACILITIES ENGINEERING SERVICE CENTER

PORT HUENEME, CALIFORNIA 93043

Prepared by: M. Fowler

Reviewed by: _____

Approved by: _____

Date: 6/12/97

CONTENTS

Section		Page
1.0	GENERAL	1
2.0	MATERIALS AND QUALIFICATIONS	2
3.0	INSTALLATION PROCEDURES	4
4.0	QUALITY ASSURANCE	5
5.0	CALIBRATION	6

PROCESS SPECIFICATION 202
FOR
STRAIN GAGE APPLICATION
FOR
AMPHIBIOUS CARGO BEACHING LIGHTER
LOGISTICS ENGINEERING ADVANCED DEMONSTRATION

1.0 GENERAL

1.1 Introduction

One of the primary purposes of the Logistics Engineering Advanced Demonstration project is to measure forces generated during mating and operating in sea conditions. These forces will be determined by the use of strain gages applied to the R1, R2, and F1 connectors. In the case of the R1 and R2 connectors the strain gages will be applied directly to the surfaces of the large connector pins. In the case of the F1 connector the hinge pin will be an instrumented pin manufactured by a load pin supplier. The strain gages will include factory attached pigtails. At the time of test these will be routed from the connectors through deck penetrator fittings into the middle pontoon where Government supplied data collection equipment will be located.

A strain gage is a device used to measure the change in a linear dimension of a body. The strain gage usually consists of a fine wire or metal film mounted on a mylar backing. The strain gage can be bonded directly to the body being measured using adhesives. This is referred to as a bonded strain gage.

A strain gage may also be bonded to a small strip of metal, leads attached, then the gage hermetically sealed to the metal. The strip of metal may then be welded to the body being measured. This is referred to as a weldable strain gage. The gages to be applied to the R1 and R2 pins will all be weldable gages.

In the case of the applied gages, the gage will be as physically large as possible. The reasons for this are to keep power dissipation maximized, to keep sensitivity maximized and to keep orientation error to a minimum.

1.2 Gage Configuration

The strain gages on the R1 and lower R2 pins will measure vertical and horizontal bending, axial tension/compression and vertical shear. The upper R2 pin will measure tension only. To measure bending, tension and compression uniaxial gages will be applied on opposite sides of each pin. To measure shear a shear rosette will be applied to each vertical side of the pin. Spares will be installed for all gages. Thus there are twelve gages on the R1 and lower R2 pins and eight on the upper R2 pin. Gages locations are shown on Drawings 159 and 171. The

gages on the R1 pin will be surface mounted inside the pin. The R2 gages will be installed in slots milled in the outside surface of the pin.

1.3 Referenced Documents

While there are few standards for this type of gage installation there are reference materials that are accepted as the standard for strain gaging due to the manufacturers standing in the industry. A recommended guide is a series of technical notes from Vishay Measurements Group Inc. Of particular interest is Tech Note TN-505, "Strain Gage Selection Criteria, Procedures and Recommendations." This document is available from the manufacturer, Vishay Measurements Group, Inc., P.O. Box 27777, Raleigh, N.C., 27611, (919) 365-3800.

1.4 Submittals

The Subcontractor shall submit a strain gage installation plan for review prior to ordering the gages. At a minimum the plan shall include:

- The name and qualifications of the person who will be installing the strain gages.
- The manufacturer and model numbers of all strain gages.
- Details of strain gage installation equipment including manufacturer, model number and specification of welding machine.
- The name and qualifications of the inspector.
- A copy of the proposed inspection form for recording inspection results.

2.0 MATERIALS AND QUALIFICATIONS

2.1 R1 and R2 Gages

2.1.1 Gage Specification

All gages will have the following characteristics:

- They shall be stainless steel weldable gages, hermetically sealed and waterproof.
- The strain range shall be within the range of 1.5% to 5% with a target of 3.5%.
- They shall be self temperature compensating for the structural material being tested.
- The active area for each gage shall be a minimum of .25 in by .125 in.
- Gage resistance shall be 350 ohms.
- The gage factor shall be a maximum of 2.5 with a target value of 2.0 or lower.

Type 1 Gage - Uniaxial

The uniaxial gages shall include one strain gage per gage unit and measure axial strain in one direction only.

Type 2 Gage - Shear Rosette

The shear rosette shall consist of two gages arranged in a shear measurement chevron pattern and include a shunt resister for test and calibration.

2.1.2 Testing

After the gages are assembled into the weldable units complete with wiring, they shall be tested as follows:

- Select a random sample of five percent of the total number of gages provided.
- Submerge in seawater at 2 ft. depth for 7 days.
- Verify that no leaks have occurred by checking electrical characteristics and comparing to those before the test.
- If more than 10 % of the gages tested fail, test a second lot of 5%.
- If more than 10 % of the second lot also fails, the gages shall be rejected and new gages provided.

2.2 Wiring

Gages shall be provided with 50 ft long pigtails preassembled with the gage and sealed to be watertight. Strain gage wires shall be at least 26 gage. The wires shall be individually coated with teflon, foil shielded and jacketed with PVC or Polyurethane to be completely waterproof. Each gage shall have individual cables with three leads and a shield. Thus the uniaxial gage will have one cable while the shear rosette will have two cables, one for each gage. The maximum diameter of the wire shall not exceed 0.25 inches. Each pigtail shall be labeled with a label 2 ft from each end indicating the gage identification number as shown on the drawings. The labels shall be typed or written in indelible ink, applied to the wire jacket and covered with clear heat shrink tubing. Individual wire identification shall be provided in the form of a written summary of color codes relative to gage hook-up.

The pigtails will be supplied with bare ends. No connectors are required.

2.3 F1 Connector Clevis Pin

The F1 connector will utilize an instrumented clevis pin to measure loads on the flexible connector. The pin will be fabricated, instrumented, and calibrated by a recognized load pin manufacturer. The pin will be provided with a low profile

watertight wiring connector on the end of the pin and a 50 ft long pigtail with mating connector. The instrumented pin will be waterproofed.

The pin dimensions are given on Drawing 145. A maximum 0.5 inch hole may be drilled on the pin centerline for the wiring. Independent strain gages shall be located on the two shear faces to measure tension/compression parallel to the connector axis (P(x)) and at 90° to the axis to measure vertical shear (V(y)). The independent gages will allow determination of different shear on the two connector sides and hence connector torsion about the connector axis and lateral bending about the vertical axis. The anticipated loads are as follows:

	Mating Condition	Mated Condition
Vertical Shear - V(y)	25,000 lbs	85,000 lbs
Axial Load - P(x)	0	160,000 lbs

2.4 Equipment and Tools

The tools required to install the strain gages include surface preparation tools such as grinders, sandpaper and cleaning materials. Attaching the gages is done with a micro spot welder. The spot welder shall provide 20 watt second capacitive discharge capability similar to the Micro Measurements Model 700 portable spot welder. Other tools include assorted hand tools, a multimeter and waterproofing materials such as 3140 RTV.

2.5 Qualifications

The qualifications of the person installing the strain gages shall be at least 3 years experience installing weldable strain gages in a marine environment.

3.0 INSTALLATION PROCEDURES

3.1 Surface Preparation

The surface will be prepared to accept weldable strain gages by first grinding away surface rust, paint, grease and any other contaminants. The bare metal surface shall be scribed with alignment lines for installing the gages. Then the surface will be sanded with increasingly finer sand paper to remove pits and surface imperfections. Finally the surface will be cleaned with solvents to remove grease and oil.

3.2 Trial Gage Installation

Once the surface is cleaned a trial gage shall be installed. This consists of a strip of metal of the same material as the gage. This tests that the welder works, there is

a good connection for the welder and that the surface is clean. The trial gage is laid in the cleaned area, off center of the actual gage location as previously scribed. The trial gage is laid and welded the same as the actual gage would be then the welds are tested by using pliers to pull up the test gage. As the trial gage tears loose it should leave material behind at the spot weld locations. If it pulls away too easily that is an indication that either the surface is not clean enough, the welder is not working or needs a new tip or the connection is bad. If the trial gage result is not satisfactory a new test shall be performed until a satisfactory procedure is verified.

3.3 Gage Installation Procedure

The gage will be installed by aligning it to the previously scribed marks and tacking down the corners with the spot welder. Then a line of spot welds is laid down along each edge. The spot welds shall overlap providing a continuous weld.

3.4 Water Proofing

Once a gage is laid it will be additionally water proofed by liberally coating it with water proofing sealant such as 3140 Silicone RTV. This rubber like material allows slight motion of the cable yet keeps water out. Sufficient RTV shall be applied so that some is forced into the cable hole and acts as a grommet to protect the cable from abrasion. See Drawings 159 and 171.

4.0 QUALITY ASSURANCE

4.1 Testing

Once the gages are installed but before they are water proofed the contractor shall test all gages. Testing shall be done by checking resistance with a multimeter. The resistance from any lead to the deck will indicate an open circuit. The resistance across each leg should be the resistance of the gage as provided by the manufacturer. Any deviation means the gage was damaged during installation and must be removed and a new one installed. All gages shall be retested until satisfactory readings are obtained.

4.2 Inspection and Approval

The contractor shall hire an independent inspector qualified in strain gage installations to observe the installation and testing of all gages. This inspector shall issue a report certifying that all gages were installed and tested as required by the specification.

5.0 CALIBRATION

Calibration is not included under this specification.

APPENDIX C

WEIGHT ESTIMATE

9.1 Center Test Bed No. 1 Weight Estimate

By: SSM Date: 5/20/97 Job No. 23423
Project: ACB Lighter Test Bed Calc No. 9.1
Subject: Weight Estimate

TRANSPORT WEIGHT ESTIMATE OF R1 SIDE PONTOON -- CENTER TEST BED #1								
					Weight Kips			
R1 Top Deck					6.97			
R1 Deck Closure					0.79			
R1 Bottom Deck					4.25			
R1 Sides					6.30			
R1 Frames					9.49			
Details					5.09			
Misc	(ladders, iso wp,mooring rings,conn)				1.38		subtotal	34.28
R1 Transverse Hawsepipe					1.36			
R1 Longitudinal Hawsepipe					1.18			
R2 Longitudinal Hawsepipe					1.57			
R1 Connector					12.16			
R2 Connector					2.00		subtotal	52.55
							diff is 1.3 k for rollers	
Iso A&B					2.04			
Subtotal					54.58			
Mill Tolerance and Welds (5%)					2.73			
Miscellaneous Steel (5%)					2.73			
			Total		60.04			

By: SSM Date: 5/20/97 Job No. 23423
Project: ACB Lighter Test Bed Calc No. 9.1
Subject: Weight Estimate

TRANSPORT WEIGHT ESTIMATE OF MIDDLE PONTOON -- CENTER TEST BED #1

					Weight Kips			
Top Deck					6.64			
Bottom Deck					3.68			
Sides					7.62			
Frames					5.14			
Details					-			
Misc	**(ladder, iso wp, liftpts,conn)**				2.46		subtotal	25.55
Iso C					1.01			
Subtotal					26.56			
Mill Tolerance and Welds (5%)					1.33			
Miscellaneous Steel (5%)					1.33			
			Total		29.21			

By: SSM Date: 5/20/97 Job No. 23423
Project: ACB Lighter Test Bed Calc No. 9.1
Subject: Weight Estimate

TRANSPORT WEIGHT ESTIMATE OF R2 SIDE PONTOON -- CENTER TEST BED #1								
					Weight			
					Kips			
R2 Top Deck					7.47			
R1 Deck Closure					0.40			
R2 Bottom Deck					4.04			
R2 Sides					7.59			
R2 Frames					6.77			
Details					5.62			
Misc	**(ladders, iso wp, mooring rings,conn)**				1.30		subtotal	33.19
R2 Transverse Hawsepipe					1.91			
R1 Longitudinal Hawsepipe					1.18			
R2 Longitudinal Hawsepipe					1.57			
R1 Connector					6.08			
R2 Connector					3.99		subtotal	47.92
Iso A&B					2.04			
Subtotal					49.96			
Mill Tolerance and Welds (5%)					2.50			
Miscellaneous Steel (5%)					2.50			
			Total		54.96			

By: SSM Date: 5/20/97 Job No. 23423
Project: ACB Lighter Test Bed Calc No. 9.1
Subject: Weight Estimate

TRANSPORT WEIGHT ESTIMATE OF THREE PONTOONS -- CENTER TEST BED #1								
					Weight Kips			
R1 Side Pontoon (w/o rem iso)					52.55			
Middle Pontoon(w/o rem iso)					25.55			
R2 Side Pontoon (w/o rem iso)					47.92			
Fenders					1.62			
				subtotal	127.64			
Mill Tolerance (5%)					6.38			
Miscellaneous Steel (5%)					6.38			
				total	140.40	kips		
					62.68	LT		

By: SSM Date: 5/20/97 Job No. 23423
Project: ACB Lighter Test Bed Calc. No 9.1
Subject: Weight Estimate

			WEIGHT OF R1 SIDE PONTOON					
Description		Number	Unit Wt	Length/ Area	Length/ Area	Thickness	Weight	Total Weight
			(Lb/Ft) or (Lb/cuFt)	Ft or SqFt	Ft or SqFt	Inches	Lbs	Kips
Top Deck Framing								
Pl	2	2	490	2.00	2.9167	0.5	238.20	
less plate	2A	-1	490	1.25	1.0	0.5	-25.52	
less plate	2B	-1	490	0.708	0.708	0.5	-10.24	
	3	2	490	5.0	2.9167	0.25	297.75	
	3	1	490	10.917	8.0	0.25	891.53	
	3A	-1	490	3.83	3	0.25	-117.29	
	21	1	490	3.83	3	0.5	234.59	
	4	1	490	4.1667	8.0	0.75	1020.84	
less plate	4A	-1	490	2.167	7.0	0.75	-464.49	
	3	1	490	15.917	8.0	0.25	1299.86	
	3B	-1	490	3.83	3.42	0.25	-133.71	
	28	1	490	3.83	3.42	0.5	267.43	
	5	1	490	2.0	8.0	0.75	490.00	
less plate	5A	-1	490	1.25	1.0	0.75	-38.28	
less plate	5B	-1	490	0.708	0.708	0.75	-15.36	
less hawes	3C	-3	490	1.6	1.0	0.25	-49.31	
less conn	3D	-8	490	0.5	0.3	0.25	-13.60	
Weight								3.87
PL		14	490	0.5	1.77	0.5	252.96	
L6x4x3/8	6	6	12.3	3.45	1	1	254.61	
	7	2	12.3	2.45	1	1	60.27	
	8	2	12.3	2.76	1	1	67.90	
	9	13	12.3	3.58	1	1	572.44	
	12	10	12.3	4.15	1	1	510.45	
	13	1	12.3	2.47	1	1	30.38	
	15	2	12.3	1.92	1	1	47.23	
	16	1	12.3	1.65	1	1	20.30	
	20	10	12.3	3.49	1	1	429.27	
	23	14	12.3	4.15	1	1	714.63	
	24	1	12.3	1.24	1	1	15.25	
	25	2	12.3	2.24	1	1	55.10	
	29	1	12.3	1.9	1	1	23.37	
	30	1	12.3	2.46	1	1	30.26	
	32	1	12.3	1.08	1	1	13.28	
Weight								3.10
Total Weight for Top Deck Framing:								6.97

By: SSM Date: 5/20/97 Job No. 23423
Project: ACB Lighter Test Bed Calc. No 9.1
Subject: Weight Estimate

			WEIGHT OF R1 SIDE PONTOON					
Description		Number	Unit Wt	Length/ Area	Length/ Area	Thickness	Weight	Total Weight
			(Lb/Ft) or (Lb/cuFt)	Ft or SqFt	Ft or SqFt	Inches	Lbs	Kips
Bottom Deck Framing								
Pl	2	2	490	2.0	8	0.38	490.00	
less plate	2A	-2	490	1	1.25	0.38	-38.28	
less plate	2B	-2	490	0.75	1.00	0.38	-22.97	
less holes	2C	-7	490	0.35	1	0.38	-37.52	
	3	1	490	6.0	8.0	0.31	612.50	
	4	1	490	10.42	8.0	0.25	850.70	
	5	1	490	4.17	8.0	0.5	680.56	
	7	1	490	5.50	8.0	0.31	561.46	
	14	1	490	9.9	8.0	0.25	810.13	
less conn		-8	490	0.5	0.3	0.31	-16.84	
Weight								3.89
L2.5x2x3/16	6	2	2.75	3.58	1	1	19.69	
	8	2	2.75	4.15	1	1	22.83	
	9	2	2.75	4.16	1	1	22.88	
	10	4	2.75	9.55	1	1	105.05	
	11	3	2.75	2.167	1	1	17.88	
	12	2	2.75	6.64	1	1	36.52	
	13	6	2.75	8.25	1	1	136.13	
Weight								0.36
Total Weight for Bottom Deck Framing:								4.25

By: SSM
Project: ACB Lighter Test Bed
Subject: Weight Estimate

Date: 5/20/97

Job No. 23423
Calc. No 9.1

WEIGHT OF R1 SIDE PONTOON (continued)

Description		Number	Unit Wt (Lb/Ft) or (Lb/cuFt)	Length/ Area Ft or SqFt	Length/ Area Ft or SqFt	Thickness Inches	Weight Lbs	Total Weight Kips
R1 cover	Dwg 128							
L4x4x1/4		9	6.6	2.33			138.40	
L4x4x1/4		2	6.6	7.00			92.40	
Pl 1/4		1	490	2.330	7.000	0.25	166.50	
								0.40

By: SSM Date: 5/20/97 Job No. 23423
Project: ACB Lighter Test Bed Calc No. 9.1
Subject: Weight Estimate

		Weight of R1 Side Pontoon (continued)						
Description		Number	Unit Wt	Length/ Area	Length/ Area	Thickness	Weight	Total Weight
			(Lb/Ft) or (Lb/cuFt)	Ft or SqFt	Ft or SqFt	Inches	Lbs	Kips
Section A								
PI	1	1	490	38.00	7.79	0.19	2266.99	
less conn		-4	490	2.17	1.83	0.19	-121.45	
less conn		-8	490	1.00	1.17	0.19	-71.48	
add shear		4	490	2.17	1.83	1.25	809.65	
add conn		8	490	1.00	1.17	1.00	381.22	
misc conn		4	0.05				0.20	
misc conn		3	0.01				0.03	
misc conn		1	0.03				0.03	
Weight								3.27
L2.5x2x3/16	2	6	2.75	9.55	1.00	1.00	157.58	
	3	2	2.75	5.71	1.00	1.00	31.41	
	4	2	2.75	3.34	1.00	1.00	18.37	
	5	4	2.75	18.79	1.00	1.00	206.69	
	6	1	2.75	3.91	1.00	1.00	10.75	
	11	1	2.75	3.82	1.00	1.00	10.51	
Weight								0.44
Section B								
PI	9	1	490	38.33	7.79	0.19	2286.26	
less R1		-1	490	2.17	7.00	0.19	-116.12	
less ladder		-7	490	0.44	1.00	0.19	-23.58	
less moor		-2	490	1.18	0.67	0.19	-12.07	
less pipe		-1	490	1.07	1.00	0.19	-8.19	
Weight								2.13
L2.5x2x3/16	12	6	2.75	2.75	1.00	1.00	45.38	
	14	8	2.75	9.84	1.00	1.00	216.48	
	15	1	2.75	1.57	1.00	1.00	4.32	
	16	1	2.75	5.07	1.00	1.00	13.94	
	17	1	2.75	8.17	1.00	1.00	22.46	
	18	3	2.75	6.33	1.00	1.00	52.25	
	19	1	2.75	5.38	1.00	1.00	14.78	
	20	1	2.75	2.78	1.00	1.00	7.65	
	21	3	2.75	1.33	1.00	1.00	11.00	
L 6X4X3/8	13	2	12.3	3.49	1.00	1.00	85.85	
Weight								0.47
Total Weight for Sections A and B:								6.30

By: SSM Date: 5/20/97 Job No. 23423
Project: ACB Lighter Test Bed Calc No. 9.1
Subject: Weight Estimate

		Weight of R1 Side Pontoon (continued)						
Description		Number	Unit Wt	Length/ Area	Length/ Area	Thickness	Weight	Total Weight
			(Lb/Ft) or (Lb/cuFt)	Ft or SqFt	Ft or SqFt	Inches	Lbs	Kips
Frame 1								
Pl	1	1	490	6.04	7.79	0.50	961.15	
less R1	1A	-1	490	2.17	7.00	0.50	-309.66	
less hawes	1B	-1	490	1.77	1.00	0.50	-36.14	
	3	2	490	0.25	0.43	0.25	2.18	
	4	4	490	0.21	0.21	0.50	3.53	0.62
L2.5x2x3/16	2	2	2.75	1.08	1.00	1.00	5.96	
	6	2	2.75	0.50	1.00	1.00	2.75	
	7	1	2.75	1.17	1.00	1.00	3.21	
	10	1	2.75	1.96	1.00	1.00	5.38	
	11	1	2.75	2.17	1.00	1.00	5.96	
	12	1	2.75	1.43	1.00	1.00	3.92	0.03
Total for Frame 1:								0.65
Frame 2								
Plate	13	1	490	2.90	7.79	0.19	173.01	
	15	1	490	1.25	2.85	0.25	36.42	
less moor		-1	490	1.00	1.00	0.19	-7.66	
less access	13A	-1	490	1.33	2.00	0.19	-20.37	
less pipe		-1	490	1.04	1.00	0.19	-7.96	
	16	2	490	0.25	0.85	0.25	4.34	
	17	1	490	0.50	2.85	0.50	29.09	
	23	12	490	0.16	0.42	0.25	7.97	
L2.5X2X3/16	14	2	2.75	1.19	1.00	1.00	6.53	
WT6X7	18	1	7	0.52	1.00	1.00	3.64	
	19	1	7	3.94	1.00	1.00	27.58	
	20	1	7	1.44	1.00	1.00	10.08	
	21	1	7	2.85	1.00	1.00	19.95	
	22	1	7	7.79	1.00	1.00	54.53	
Total for Frame 2:								0.34

By: SSM Date: 5/20/97 Job No. 23423
Project: ACB Lighter Test Bed Calc No. 9.1
Subject: Weight Estimate

		Weight of R1 Side Pontoon (continued)						
Description		Number	Unit Wt	Length/ Area	Length/ Area	Thickness	Weight	Total Weight
			(Lb/Ft) or (Lb/cuFt)	Ft or SqFt	Ft or SqFt	Inches	Lbs	Kips
Frame 3								
Pl	25	1	490	7.79	8.00	0.19	477.14	
	26	4	490	0.50	2.92	0.50	119.23	
	27	6	490	0.25	1.29	0.25	19.75	
	28	2	490	0.16	24.00	0.25	76.44	
	34	2	490	0.25	2.17	0.50	22.12	
less open		-2	490	2.42	4.00	0.19	-148.23	
WT6X7	24	2	7	4.00	1.00	1.00	56.00	
L4X3X1/4	29	1	6.2	2.67	1.00	1.00	16.55	
Total for Frame 3								0.64
Frame 4								
Pl	25	1	490	8.00	8.00	0.19	490.00	
WT 5x6	30/32/33	1	6	29.41	1.00	1.00	176.46	
less hawes		-1	490	1.07	1.00	1.00	-43.69	
Total for Frame 4								0.62
Total for Frame 9								0.62
Frame 5								
Pl	1	1	490	1.25	7.97	0.25	101.70	
	2	1	490	0.50	7.97	0.50	81.36	
WT 6x7	3	1	7	7.15	1.00	1.00	50.05	
WT 6x7	4	2	7	6.00	1.00	1.00	84.00	
	6	2	490	0.16	0.24	0.25	0.78	
Total for Frame 5								0.32
Total for Frame 8								0.32

Weight of R1 Side Pontoon (continued)

Description		Number	Unit Wt (Lb/Ft) or (Lb/cuFt)	Length/ Area Ft or SqFt	Length/ Area Ft or SqFt	Thickness Inches	Weight Lbs	Total Weight Kips
Frame 6/7								
Pl	13	1	490	2.83	7.54	0.50	435.65	
	14	1	490	3.00	7.54	0.25	230.91	
		1	490	7.30	1.00	0.25	74.52	
		1	490	6.90	1.00	0.50	140.88	
		1	490	3.33	1.00	2.50	339.94	
		1	490	1.55	1.00	1.00	63.29	
		1	490	3.79	1.00	0.19	29.02	
		1	490	5.00	1.00	0.75	153.13	
		1	490	12.64	1.00	0.38	193.55	
		-2	490	0.67	1.33	0.50	-36.39	
WT 5x6	16	1	6	7.50	1.00	1.00	45.00	
Total for Frame 6								1.67
Total for Frame 7								1.67
Frame 10								
Pl	1	1	490	1.33	8.00	0.25	108.62	
	2	1	490	0.50	8.00	0.50	81.67	
	31/32/33	1	490	8.22	1.00	0.38	125.87	
WT 5x6	3/4	1	6	19.15	1.00	1.00	114.90	
	6	2	490	0.16	0.24	0.25	0.76	
Total for Frame 10								0.43
Frame 11								
Pl	34	1	490	1.79	5.00	0.25	91.36	
	35	1	490	3.00	7.79	0.19	178.93	
WT 6X7	37	1	7	5.00	1.00	1.00	35.00	
WT 6X7	39	1	7	5.42	1.00	1.00	37.94	
	40/42/43	1	490	3.72	1.00	0.25	37.98	
	57	1	490	0.33	1.92	0.50	12.94	
	5	1	490	1.55	5.00	0.25	79.11	
less moor		-1	490	1.00	1.00	0.25	-10.21	
L2.5X2X3/16	36	3	2.75	3.00	1.00	1.00	24.75	
Total for Frame 11:								0.49

By: SSM Date: 5/20/97 Job No. 23423
Project: ACB Lighter Test Bed Calc No. 9.1
Subject: Weight Estimate

		Weight of R1 Side Pontoon (continued)						
Description		Number	Unit Wt	Length/ Area	Length/ Area	Thickness	Weight	Total Weight
			(Lb/Ft) or (Lb/cuFt)	Ft or SqFt	Ft or SqFt	Inches	Lbs	Kips
Frame 12								
Plate	44	1	490	6.00	7.79	0.50	954.28	
	45	4	490	0.21	0.21	0.50	3.53	
	46/49	1	490	1.68	1.00	0.25	17.15	
	48	1	490	3.00	4.17	1.00	510.46	
Pls		1	490	16.29	1.00	0.75	498.88	
less openning		-1	490	3.00	4.17	0.50	-255.41	
less openning		-1	490	0.89	1.50	1.00	-54.51	
L2.5x2x3/16	47	4	2.75	2.00	1.00	1.00	22.00	
	41	4	2.75	2.55	1.00	1.00	28.05	
Total for Frame 12:								1.72
						Frame total=		9.49

By: SSM Date: 5/20/97 Job No. 23423
Project: ACB Lighter Test Bed Calc. No. 9.1
Subject: Weight Estimate

		Weight of R1 Side Pontoon (continued)						
Description		Number	Unit Wt	Length/ Area	Length/ Area	Thickness	Weight	Total Weight
			(Lb/Ft) or (Lb/cuFt)	Ft or SqFt	Ft or SqFt	Inches	Lbs	Kips
Sect C								
bar	1	8	490	0.17	0.17	2.00	18.22	
	3	1	490	0.56	0.83	1.25	23.85	
Sect D								
	4	1	490	0.56	1.42	1.25	40.81	
Sect G								
	5	1	490	2.23	7.79	0.19	133.00	
L2.5X2X3/16	27	3	2.75	2.75	1.00	1.00	22.69	
Sect H								
	28	1	490	1.00	7.75	0.50	158.23	
L2.5X2X3/16	29	3	2.75	1.00	1.00	1.00	8.25	
L2.5X2X3/16	45	2	2.75	0.50	1.00	1.00	2.75	
Sect J								
	30	1	490	1.25	7.75	0.50	197.79	
L2.5X2X3/16	31	3	2.75	1.42	1.00	1.00	11.72	
L2.5X2X3/16	32	1	2.75	0.96	1.00	1.00	2.64	
	33	1	490	1.00	0.58	1.00	23.68	
	34	1	490	0.25	1.25	0.25	3.19	
	35	2	490	5.00	0.42	0.38	64.31	
	39	1	490	0.71	1.00	1.00	28.99	

By: SSM Date: 5/20/97 Job No. 23423
Project: ACB Lighter Test Bed Calc. No. 9.1
Subject: Weight Estimate

		Weight of R1 Side Pontoon (continued)						
Description		Number	Unit Wt (Lb/Ft) or (Lb/cuFt)	Length/ Area Ft or SqFt	Length/ Area Ft or SqFt	Thickness Inches	Weight Lbs	Total Weight Kips
Det K								
	13	2	490	2.83	7.35	0.50	849.35	
	14	2	490	3	7.35	0.25	450.19	
	6	2	490	0.125	0.58	0.50	2.96	
	7	2	490	0.33	0.58	0.50	7.82	
	8	2	490	0.33	5.83	0.50	78.56	
	9	2	490	0.125	5.83	0.50	29.76	
	10	2	490	0.58	2.67	0.50	63.23	
	11	4	490	0.58	1.33	2.50	314.99	
	12	2	490	0.58	1.33	0.50	31.50	
	15	12	490	0.5	1.44	0.25	88.20	
	16	4	490	0.33	6.75	0.75	272.87	
	17	2	490	0.58	2.67	0.2[illegible]	31.62	
	18	2	490	0.58	1.125	0.25	13.32	
	19	4	490	0.58	1.33	1.00	126.00	
	21	2	490	0.58	1.33	0.25	15.75	
	22	4	490	0.125	1.33	0.50	13.58	
	23	4	490	0.125	2.67	0.50	27.26	
	24	4	490	0.125	0.79	0.50	8.06	
	25	2	490	0.58	0.75	0.50	17.76	
	26	4	490	0.67	1.33	2.50	363.87	
	44	4	490	0.83	6.75	0.38	343.15	
L4X3X1/4	20	2	5.8	6.75			78.30	
Det L								
	40	2	490	0.5	3.67	0.75	112.39	
	41	2	490	0.5	4.13	0.75	126.48	
	42	1	490	3	4.13	1.00	505.93	
	43	1	490	3	3.67	0.50	224.79	
less openning		-1	490	0.85	1.5	1.00	-52.06	
less area for item 43		-1	490	0.41	3.67	0.50	-30.72	
Det M/N								
	36	2	490	0.71	7.79	0.50	225.85	
L2.5X2X3/16	37	6	2.75	0.71	1	1.00	11.72	
L2.5X2X3/16	38	2	2.75	0.38	1	1.00	2.09	
					Detail total		5094.66	5.09

By: SSM Date: 5/20/97 Job No. 23423
Project: ACB Lighter Test Bed Calc. No. 9.1
Subject: Weight Estimate

		Weight of R1 Side Pontoon (continued)						
Description		Number	Unit Wt	Length/ Area	Length/ Area	Thickness	Weight	Total Weight
			(Lb/Ft) or (Lb/cuFt)	Ft or SqFt	Ft or SqFt	Inches	Lbs	Kips
R1 Long Hawsepipe		(Quantity for one)						
	Dwg 100							
pipe	2	1	63.4	7.72			489.77	
reducer	3	1					65	
bend	4	1					81.5	
pipe	5	1	40.5	4.5			182.16	
cone	6	1	490	4.19	0.33	0.375	21.17	
	7	2	490	1.27	1.31	0.38	51.07	
	8	1	490	1.00	1.27	0.38	19.45	
	9	1	490	1.25	1.31	0.38	25.13	
cover	11	1	490	1.17	1.83	0.50	43.60	
hinge	12	1					negligible	
Detail1	13	1	-	-	-	-	200.00	
							1178.85	1.18
R1 Transverse Hawsepipe			(Quantity for one)					
	Dwg 101							
pipe	2	1	63.4	4.8			304.52	
reducer	3	1					65	
cone	4	1	490	4.19	0.33	0.375	21.17	
	5	1	490	1	3.96	0.75	121.28	
	6	2	490	1.53	3.79	0.375	177.59	
	7	2	490	1	1.5	0.375	45.94	
	8	1	490	0.33	1.72	0.375	8.69	
	9	1	490	0.33	1.91	0.375	9.65	
	10	1	490	1	3.79	0.375	58.03	
	11	1	490	1.83	4.15	0.25	77.53	
Detail 2	12	1	-	-	-	-	430.00	
cover	14	1	490	1.167	1.67	0.5	39.79	
hinge	15	1					negligible	
					R1 Hawspipe Total		1359.19	1.36

		Weight of R1 Side Pontoon (continued)						
Description		Number	Unit Wt	Length/ Area	Length/ Area	Thickness	Weight	Total Weight
			(Lb/Ft) or (Lb/cuFt)	Ft or SqFt	Ft or SqFt	Inches	Lbs	Kips
R2 long Hawsepipe		(Quantity for one)						
	Dwg 102							
pipe	2	1					81.5	
reducer	3	1					65	
	4	1	490	2	6.81	0.375	208.56	
	5	2	490	1	1.083	0.375	33.17	
	6	1	490	0.958	1.292	0.375	18.95	
	7	2	490	0.406	0.75	0.375	9.33	
	8	2	490	1	5.167	0.375	158.24	
	9	1	490	0.583	5.67	0.375	50.62	
	10	2	490	0.917	5.67	0.375	159.23	
	11	2	490	1.5	5.67	0.375	260.47	
pipe	12	1	40.48	7.0			283.36	
Detail 1	16	1	-	-	-	-	200.00	
cover	17	1					43.60	
							1572.017	1.57
R2 Transverse Hawsepipe			(Quantity for one)					
	Dwg 103							
	2	1	490	2	6.813	0.375	208.65	
	3	2	490	1	1.083	0.375	33.17	
	4	2	490	0.44	1	0.375	13.48	
	5	2	490	0.41	0.75	0.375	9.42	
	6	2	490	1	4.33	0.375	132.61	
	7	1	490	0.58	4.83	0.375	42.90	
	8	2	490	0.917	4.83	0.375	135.64	
	9	2	490	1.5	4.83	0.375	221.88	
	10	1	490	1	6.74	0.375	103.21	
	11	1	490	1	6.573	0.375	100.65	
	12	2	490	1.5	6.573	0.375	301.95	
	13	2	490	1	1.5	0.375	45.94	
	14	1	490	1.83	2.67	0.25	49.88	
	15	2	490	0.33	1.49	0.375	15.06	
Detail 3	16	1	-	-	-	-	460.00	
cover	17	2					39.79	
					R2 Hawspipe total		1914.20	1.91

Weight of R1 Side Pontoon (continued)

Description		Number	Unit Wt (Lb/Ft) or (Lb/cuFt)	Length/ Area Ft or SqFt	Length/ Area Ft or SqFt	Thickness Inches	Weight Lbs	Total Weight Kips
	Dwg 110							
Ladder#1								
step	2	7	25				350	
Pl	3	2	490	0.474	0.474	0.25	4.59	
	4	1	490	0.474	1.67	0.25	8.08	
bar	5	1	490	0.0055	2.167	1	5.84	
					Ladder#1 total=		368.51	0.37
Ladder #2								
Pl	11	2	490	0.208	7.167	0.375	45.65	
	12	7	490	0.0055	1		18.87	
	13	4	3.62	1.167			16.90	
					Ladder #2 total=		81.42	0.08
Lift point	Dwg 123							
pin		1	490	0.049	0.33		7.92	
Pl		2	490	1.43	1.79	0.75	156.78	
Masterlink		1	490	0.0167	3.5		28.64	
Pl		1	490	1	1.79	0.75	54.82	
Pl		1	490	1.33	1.79	0.75	72.91	
Misc							10.00	
					Liftpoint total=		331.07	0.33
	Dwg 123							
Iso Connectors								
Iso		1	25				25.00	
Pl		1	490	1.15	1.4	0.25	16.44	
					Iso total=		41.44	0.04
	Dwg 125							
Mooring ring								
Casting		1	490	0.67	1.167	1	31.93	
		2	490	1.083	1.167	1	103.22	
		2	490	0.67	1.083	1	59.26	
bar		1	490	0.0668	0.5		16.37	
					Mooring ring total=		210.77	0.21

By: SSM Date: 5/20/97 Job No. 23423
Project: ACB Lighter Test Bed Calc. No. 9.1
Subject: Weight Estimate

		Weight of R1 Side Pontoon (continued)						
Description		Number	Unit Wt	Length/ Area	Length/ Area	Thickness	Weight	Total Weight
			(Lb/Ft) or (Lb/cuFt)	Ft or SqFt	Ft or SqFt	Inches	Lbs	Kips
Iso A	Dwg 120	(Quantity for one, 2 per side pontoon)						
Pl	2	2	490	1.33	1.58	1	171.6	
bar	3	2	490	0.0085	3.63	30.24	76.19	
	4	1	490	0.58	0.65	0.5	7.70	
TS6x6x3/8	5	1	27.5		7.15		196.48	
	6	1	27.5		0.45		12.37	
	7	1	490	0.21	0.25	0.75	1.61	
	8	2	490	0.45	0.33	0.375	4.55	
	9	1	490	0.5	0.5	0.5	5.10	
iso cover	10	1					63.15	
iso		2	25				50.00	
						Iso A total	588.76	0.59
Iso B	Dwg 121	(Quantity for one, 2 per side pontoon)						
	2	2	490	1.04	1.04	1	88.33	
	3	2	490				negigible	
	4	2	490	0.58	0.65	0.5	15.39	
TS6x6x3/8	5	1	27.5			7.15	196.48	
	6	1	27.5			0.16	4.40	
	7	1	490	0.25	0.25	0.75	1.91	
	8	2	490	0.5	0.5	0.5	10.21	
iso cover	9						63.15	
iso		2	25				50.00	
						Iso B total	429.87	0.43
	iso cover							
Pl	10	1	490	1.3	1.56	0.5	41.72	
	11	2	490	0.0085	0.167		1.39	
	12	1	490	0.7	0.96	0.25	6.57	
	13	1	490	0.7	1.19	0.25	8.14	
L2x2x1/4	14	1	3.19		1.67		5.33	
hinge	15						negligible	
						subtotal	63.15	-
Iso C	Dwg 130							
TS 6x6		1	27.5	7.38			202.95	
iso		2	25				50.00	
pl		2	490	0.59	0.54	0.5	312.23	
						Iso C total	252.95	0.25

		Weight of R1 Side Pontoon (continued)						
Description		Number	Unit Wt	Length/ Area	Length/ Area	Thickness	Weight	Total Weight
			(Lb/Ft) or (Lb/cuFt)	Ft or SqFt	Ft or SqFt	Inches	Lbs	Kips
Corner fender unit		(Quantity for 1, 2 per end pontoon)						
Pl	2	2	490	1.042	1.042	1	88.67	
	3	2	490				unknown	
	4	1	490	0.71	7.44	0.75	161.77	
	5	1	490	0.65	7.44	0.75	148.10	
	8	1	490	0.21	0.21	0.75	1.35	
	9	1	490	0.167	0.33	2	4.50	
					Fender total=		404.40	0.40
Potoon Connectors- Quantity is per assembly								
	Dwg 180	Top & bottom Connectors			(8 locations per test bed)			
Pl	2	4	490	0.27	0.6	0.375	9.92	
	4	4	490	0.24	0.75	0.25	7.35	
	5	4	490	0.344	0.5	0.25	7.02	
	6	8	490	0.323	0.5	0.25	13.19	
	7	4	490	0.5	0.917	0.25	18.72	
	11	4	490	0.438	0.5	0.25	8.94	
	12	2	490	0.521	0.75	0.375	11.97	
	13	2	490	0.75	0.813	0.5	24.90	
						subtotal	102.01	0.10
	Dwg 181	Shear Connector		(6 per test bed)				
Pl	4	2	490	0.161	0.67	0.1875	1.65	
	5	2	490	0.146	0.531	0.1875	1.19	
	6	2	490	0.224	0.198	0.1875	0.68	
	7	2	490	0.219	0.271	0.1875	0.91	
	9	1	490	1	1.167	0.1875	8.93	
	10	1	490	0.67	0.67	0.1875	3.44	
	11	1	490	0.33	0.646	0.33	2.87	
						subtotal	19.67	0.02
	Dwg 182	Shear Connector		(2 per test bed)				
Pl	4	2	490	0.16	0.67	0.19	1.65	
	5	5	490	0.15	0.67	0.19	3.74	
	6	2	490	0.22	0.20	0.19	0.68	
	7	2	490	0.22	0.27	0.19	0.91	
	9	1	490	1.00	1.17	0.19	8.93	
	10	1	490	0.67	0.67	0.19	3.44	
	11	1	490	0.33	0.65	4.00	34.82	
						subtotal	54.18	0.05

By: SSM Date: 5/20/97 Job No. 23423
Project: ACB Lighter Test Bed Calc No. 9.1
Subject: Weight Estimate

			WEIGHT OF MIDDLE PONTOON					
Description		Number	Unit Wt	Length/ Area	Length/ Area	Thickness	Weight	Total Weight
			(Lb/Ft) or (Lb/cuFt)	Ft or SqFt	Ft or SqFt	inches	Lbs	Kips
Top Deck Framing								
deck plate	2	1	490	8.00	40.0	0.25	3266.67	
less conn		-16	490	0.5	0.3	0.25	-27.20	
Weight								3.24
L6x4x3/8	3	25	12.3	3.5	1	1	1076.25	
	4	14	12.3	3.58	1	1	616.48	
	5	11	12.3	4.15	1	1	561.50	
	6	14	12.3	4.14	1	1	712.91	
	7	7	12.3	2.167	1	1	186.58	
	8	2	12.3	3.33	1	1	81.92	
	9	2	12.3	3.167	1	1	77.91	
	10	1	12.3	1.38	1	1	16.97	
	11	3	12.3	2	1	1	73.80	
Weight								3.40
Total Weight for Top Deck Framing:								6.64
Bottom Deck Framing								
Deck Plate								
	2	1	490	8.0	40	0.25	3266.67	
less conn		-16	490	0.5	0.3	0.25	-26.95	
Weight								3.24
L2.5x2x3/16	4	8	2.75	10.58	1	1	232.76	
	5	4	2.75	18.79	1	1	206.69	
Weight								0.44
Total Weight for Bottom Deck Framing:								3.68

By: SSM Date: 5/20/97 Job No. 23423
Project: ACB Lighter Test Bed Calc No. 9.1
Subject: Weight Estimate

		Weight of Middle Pontoon (Continued)						
Description		Number	Unit Wt	Length/ Area	Length/ Area	Thickness	Weight	Total Weight
			(Lb/Ft) or (Lb/cuFt)	Ft or SqFt	Ft or SqFt	Inches	Lbs	Kips
Section A								
Plate	1	1	490	40.00	7.79	0.19	2386.30	
less conn		-4	490	2.17	1.83	0.19	-121.45	
less conn		-8	490	1.00	1.17	0.19	-71.48	
add shear		4	490	2.17	1.83	1.25	809.65	
add conn		8	490	1.00	1.17	1.00	381.22	
misc conn		8	0.05				0.41	
misc conn		6	0.01				0.06	
misc conn		2	0.03				0.05	
L2.5x2x3/16	2	8	2.75	10.00	1	1	220.00	
L2.5x2x3/16	3	4	2.75	18.79	1	1	206.69	
Weight								3.81
Section B								
Weight								3.81
Total Weight for Sections A and B:								7.62
Frame 1								
Plate	1	1	490	8.00	7.79	0.19	477.26	
WT5X6	2	4	6	7.00			168.00	
	3	6	490	0.25	1.29	0.25	19.75	
Total for Frame 1:								0.67
Frame 2/6/7/11								
Plate	6	4	490	0.25	0.85	0.25	8.68	
	7	1	490	1.25	7.89	0.25	100.68	
	8	1	490	0.50	7.89	0.50	80.54	
WT5X6	9	2	6	6.08			73.00	
WT5X6	10	1	6	7.89			47.34	
	11	4	490	0.16	0.42	0.25	2.68	
L2.5X2X3/16	17	4	2.75	1.75	1	1	19.25	
L2.5X2X3/16	18	2	2.75	2.33	1	1	12.82	
L2.5X2X3/16	19	2	2.75	1.92	1	1	10.56	
Grating	20	1		2.17	3.00	1.0		

Weight of Middle Pontoon (Continued)								
Description		Number	Unit Wt	Length/ Area	Length/ Area	Thickness	Weight	Total Weight
			(Lb/Ft) or (Lb/cuFt)	Ft or SqFt	Ft or SqFt	Inches	Lbs	Kips
Total for Frame 6:								0.36
Total for Frame 7:								0.31
Total for Frame 2:								0.31
Total for Frame 11:								0.31
Frame 3/5/8/10								
Plate	7	1	490	1.25	7.89	0.25	100.68	
	8	1	490	0.50	7.89	0.50	80.54	
WT5X6	9	2	6	6.08			73.00	
WT5X6	10	1	6	7.89			47.34	
Total for Frame 3								0.30
Total for Frame 5								0.30
Total for Frame 8								0.30
Total for Frame 10								0.30
Frame 4/9								
Plate	1	1	490.0	7.79	8.00	0.19	477.14	
WT 5x6	21	4	6	7.55			181.20	
Total for Frame 4								0.66
Total for Frame 9								0.66
Frame 12								
Plate	1	1	490	7.79	8.00	0.19	477.14	
WT5X6	2	1	6	6.96			41.76	
	3	6	490	0.3	1.29	0.25	19.75	
	5	3	490	0.25	0.78	0.25	5.97	
WT5X6	12	3	6	0.75			13.50	
	13	3	6	5.68			102.24	
Total for Frame 12								0.66
						Frames total		5.14

By: SSM Date: 5/20/97 Job No. 23423
Project: ACB Lighter Test Bed Calc. No. 9.1
Subject: Weight Estimate

			WEIGHT OF R2 SIDE PONTOON					
Description		Number	Unit Wt	Length/ Area	Length/ Area	Thickness	Weight	Total Weight
			(Lb/Ft) or (Lb/cuFt)	Ft or SqFt	Ft or SqFt	Inches	Lbs	Kips
Top Deck Framing								
deck plate	2	2	490	2.00	2.9167	0.5	238.20	
less plate	2A	-1	490	1.25	1.0	0.5	-25.52	
less plate	2B	-1	490	0.708	0.708	0.5	-10.24	
	3	2	490	5.0	2.9167	0.25	297.75	
	3	1	490	10.917	8.0	0.25	891.53	
	3A	-1	490	3.83	3	0.25	-117.29	
	21	1	490	3.83	3	0.5	234.59	
Modify 4	**4**	**1**	**490**	**4.167**	**8**	**0.25**	**340.31**	
less plate	**4A**	**-1**	**490**	**4**	**5.67**	**0.25**	**-231.53**	
add plate		**1**	**490**	**4**	**5.67**	**0.75**	**694.58**	
	3	1	490	15.917	8.0	0.25	1299.86	
	3B	-1	490	3.83	3.42	0.25	-133.71	
	28	1	490	3.83	3.42	0.5	267.43	
	5	1	490	2.0	8.0	0.75	490.00	
less plate	5A	-1	490	1.25	1.0	0.75	-38.28	
less plate	5B	-1	490	0.708	0.708	0.75	-15.36	
less guill	5B	**-2**	490	1.210	1.083	0.75	-80.26	
less hawes	3C	-3	490	1.6	1.0	0.25	-49.31	
less conn	3D	-8	490	0.5	0.3	0.25	-13.60	
less Iso	3E	-2	490	0.5	0.5	0.25	-5.10	
Weight								4.03
PL		14	490.0	0.5	1.77	0.5	252.96	
L6x4x3/8	1	6	12.3	3.34	1	1	246.49	
	1	2	12.3	2.45	1	1	60.27	
	1	2	12.3	2.76	1	1	67.90	
	1	13	12.3	3.58	1	1	572.44	
	1	10	12.3	4.35	1	1	535.05	
	1	1	12.3	2.47	1	1	30.38	
	1	2	12.3	11.92	1	1	293.23	
	1	1	12.3	1.65	1	1	20.30	
	1	10	12.3	3.49	1	1	429.27	
	1	14	12.3	4.15	1	1	714.63	
	1	1	12.3	1.24	1	1	15.25	
	1	2	12.3	1.24	1	1	30.50	
	1	1	12.3	1.9	1	1	23.37	
	1	1	12.3	2.46	1	1	30.26	
	1	1	12.3	1.08	1	1	13.28	
	23	2	12.3	0.83	1	1	20.42	
	30	6	12.3	1.083	1	1	79.93	
Weight								3.44
Total Weight for Top Deck Framing:								7.47

By: SSM Date: 5/20/97 Job No. 23423
Project: ACB Lighter Test Bed Calc. No. 9.1
Subject: Weight Estimate

			WEIGHT OF R2 SIDE PONTOON					
Description		Number	Unit Wt	Length/ Area	Length/ Area	Thickness	Weight	Total Weight
			(Lb/Ft) or (Lb/cuFt)	Ft or SqFt	Ft or SqFt	Inches	Lbs	Kips
Bottom Deck Framing								
Deck Plate								
	2	2	490	2.0	8	0.38	490.00	
less plate	2A	-2	490	1	1.25	0.38	-38.28	
less plate	2B	-2	490	0.75	1.00	0.38	-22.97	
less holes	2C	-3	490	0.35	1	0.38	-16.08	
	3	1	490	6.0	8.0	0.31	612.50	
	4	1	490	10.42	8.0	0.25	850.70	
Modify pla	**5**	**1**	**490**	**4.17**	**8.0**	**0.25**	**340.28**	
less plate	**5A**	**-1**	**490**	**2.50**	**4.0**	**0.25**	**-102.08**	
add plate		**1**	**490**	**2.50**	**4.0**	**0.5**	**204.17**	
	7	1	490	5.50	8.0	0.31	561.46	
	14	1	490	9.9	8.0	0.25	810.13	
less conn		-8	490	0.5	0.3	0.25	-13.48	
Weight								3.68
L2.5x2x3/16	6	2	2.75	3.58	1	1	19.69	
	8	2	2.75	4.15	1	1	22.83	
	9	2	2.75	4.16	1	1	22.88	
	10	4	2.75	9.55	1	1	105.05	
	11	3	2.75	2.167	1	1	17.88	
	12	2	2.75	6.64	1	1	36.52	
	13	6	2.75	8.25	1	1	136.13	
Weight								0.36
Total Weight for Bottom Deck Framing:								4.04

By: SSM Date: 5/20/97 Job No. 23423
Project: ACB Lighter Test Bed Calc No. 9.1
Subject: Weight Estimate

		Weight of R2 Side Pontoon (Continued)						
Description		Number	Unit Wt	Length/ Area	Length/ Area	Thickness	Weight	Total Weight
			(Lb/Ft) or (Lb/cuFt)	Ft or SqFt	Ft or SqFt	Inches	Lbs	Kips
Section B								
Plate	1	1	490	38.00	7.79	0.19	2266.99	
less conn		-4	490	2.17	1.83	0.19	-121.45	
less conn		-8	490	1.00	1.17	0.19	-71.48	
add shear		4	490	2.17	1.83	1.25	809.65	
add conn		8	490	1.00	1.17	1.00	381.22	
misc conn		4	0.05				0.20	
misc conn		3	0.01				0.03	
misc conn		1	0.03				0.03	
Weight								3.27
L2.5x2x3/16	2	6	2.75	9.55	1.00	1.00	157.58	
	3	2	2.75	5.71	1.00	1.00	31.41	
	4	2	2.75	3.34	1.00	1.00	18.37	
	5	4	2.75	18.79	1.00	1.00	206.69	
	6	1	2.75	3.91	1.00	1.00	10.75	
	11	1	2.75	3.82	1.00	1.00	10.51	
Weight								0.44
Section A								
Plate		1	490	38.33	7.79	0.19	2286.26	
less R2		-1	490	3.00	7.00	0.19	-160.78	
less ladder		-7	490	0.44	1.00	0.19	-23.58	
less lso		-2	490	0.50	0.50	0.19	-3.83	
less moor		-2	490	1.00	0.50	0.19	-7.66	
less pipe		-1	490	1.07	1.00	0.19	-8.19	
Add plate	**19**	**1**	**490**	**3.00**	**3.63**	**0.50**	**222.34**	
Add plate	**18**	**1**	**490**	**3.00**	**4.17**	**1.00**	**510.83**	
Add plate	**25**	**2**	**490**	**0.91**	**6.88**	**0.75**	**383.47**	
Add plate	**7**	**2**	**490**	**1.18**	**1.00**	**1.50**	**144.55**	
Add plate	**24**	**3**	**490**	**0.85**	**0.92**	**0.75**	**71.85**	
less openning 18A		**-1**	**490**	**0.89**	**1.50**	**1.00**	**-54.51**	
Weight								3.36
L2.5x2x3/16	12	6	2.75	2.75	1	1	45.38	
	14	8	2.75	9.84	1	1	216.48	
	23	4	2.75	8.90	1	1	97.90	
	16	1	2.75	7.00	1	1	19.25	
	17	3	2.75	5.92	1	1	48.84	
	20	1	2.75	2.78	1	1	7.65	
	21	3	2.75	1.33	1	1	11.00	
L 6X4X3/8	13	2	12.3	3.49	1.00	1.00	85.85	
Weight								0.53

By: SSM Date: 5/20/97 Job No. 23423
Project: ACB Lighter Test Bed Calc No. 9.1
Subject: Weight Estimate

		Weight of R2 Side Pontoon (Continued)						
Description		Number	Unit Wt	Length/ Area	Length/ Area	Thickness	Weight	Total Weight
			(Lb/Ft) or (Lb/cuFt)	Ft or SqFt	Ft or SqFt	Inches	Lbs	Kips
Total Weight for Sections A and B:								7.59
Frame 1								
Plate	1	1	490	6.04	7.79	0.50	96[illegible].15	
less R1	1A	-1	490	2.17	7.00	0.50	-309.66	
less hawes	1B	-1	490	1.77	1.00	0.50	-36.14	
	3	2	490	0.25	0.43	0.25	2.18	
	4	4	490	0.21	0.21	0.50	3.53	0.62
L2.5x2x3/1	2	2	2.75	1.08	1.00	1.00	5.96	
	6	2	2.75	0.50	1.00	1.00	2.75	
	7	1	2.75	1.17	1.00	1.00	3.21	
	10	1	2.75	1.96	1.00	1.00	5.38	
	11	1	2.75	2.17	1.00	1.00	5.96	
	12	1	2.75	1.43	1.00	1.00	3.92	0.03
Total for Frame 1:								0.65
Frame 2								
Plate	13	1	490	2.90	7.79	0.19	173.01	
	15	1	490	1.25	2.85	0.25	36.42	
less moor		-1	490	1.00	1.00	0.19	-7.66	
less access	13A	-1	490	1.33	2.00	0.19	-20.37	
less pipe		-1	490	1.04	1.00	0.19	-7.96	
Pl	16	2	490	0.25	0.85	0.25	4.34	
	17	1	490	0.50	2.85	0.50	29.09	
	23	12	490	0.16	0.42	0.25	7.97	
L2.5X2X3/1	14	2	2.75	1.19	1.00	1.00	6.53	
WT6X7	18	1	7	0.52	1.00	1.00	3.64	
	19	1	7	3.94	1.00	1.00	27.58	
	20	1	7	1.44	1.00	1.00	10.08	
	21	1	7	2.85	1.00	1.00	19.95	
	22	1	7	7.79	1.00	1.00	54.53	
Total for Frame 2:								0.34

		Weight of R2 Side Pontoon (Continued)						
Description		Number	Unit Wt	Length/ Area	Length/ Area	Thickness	Weight	Total Weight
			(Lb/Ft) or (Lb/cuFt)	Ft or SqFt	Ft or SqFt	Inches	Lbs	Kips
Frame 3								
Plate	25	1	490	7.79	8.00	0.19	477.14	
	26	4	490	0.50	2.92	0.50	119.23	
	27	6	490	0.25	1.29	0.25	19.75	
	28	2	490	0.16	24.00	0.25	76.44	
	34	2	490	0.25	2.17	0.50	22.12	
less open		-2	490	2.42	4.00	0.19	-148.23	
WT6X7	24	2	7	4.00	1.00	1.00	56.00	
L4X3X1/4	29	1	6.2	2.67	1.00	1.00	16.55	
Total for Frame 3								0.64
Frame 4								
Plate	25	1	490.0	8.00	8.00	0.19	490.00	
WT 5x6	30/32/33	1	6	29.41	1.00	1.00	176.46	
less hawes		-1	490	1.07	1.00	1.00	-43.69	
Total for Frame 4								0.62
Total for Frame 9								0.62
Frame 5								
deck beam	1	1	490.0	1.25	7.97	0.25	101.70	
	2	1	490	0.50	7.97	0.50	81.36	
WT 6x7	3	1	7.0	7.15	1.00	1.00	50.05	
WT 6x7	4	2	7.0	6.00	1.00	1.00	84.00	
	6	2	490	0.16	0.24	0.25	0.78	
Total for Frame 5								0.32
Total for Frame 8								0.32

By: SSM Date: 5/20/97 Job No. 23423
Project: ACB Lighter Test Bed Calc No. 9.1
Subject: Weight Estimate

		Weight of R2 Side Pontoon (Continued)						
Description		Number	Unit Wt	Length/ Area	Length/ Area	Thickness	Weight	Total Weight
			(Lb/Ft) or (Lb/cuFt)	Ft or SqFt	Ft or SqFt	Inches	Lbs	Kips
Frame 6								
WT6X7	4	1	7	6.00	1	1	42.00	
Pl	6	2	490	0.16	1.24	0.25	4.05	
	7	1	490	1.25	7.00	0.25	89.32	
	9	1	490	1.00	1.79	0.25	18.27	
	10	1	490	0.33	1.00	0.38	5.05	
	11	1	490	0.17	0.79	0.25	1.35	
	12	1	490	0.33	1.50	0.38	7.58	
	13	1	490	1.00	2.00	0.25	20.42	
	14	1	490	0.33	6.00	0.38	30.32	
	15	1	490	0.67	6.00	0.25	41.04	
WT6X7	17	1	7	7.00	1	1	49.00	
	38	2	490	0.16	0.48	0.25	1.57	
Total for Frame 6								0.31
Total for Frame 7								0.31
Frame 10								
Pl	1	1	490	1.33	8.00	0.25	108.62	
	2	1	490	0.50	8.00	0.50	81.67	
	31/32/33	1	490	8.22	1.00	0.38	125.87	
WT 5x6	3/4	1	6	19.15	1.00	1.00	114.90	
	6	2	490	0.16	0.24	0.25	0.76	
Total for Frame 10								0.43
Frame 11								
Pl	34	1	490	1.79	5.00	0.25	91.36	
	35	1	490	3.00	7.79	0.19	178.93	
WT 6X7	37	1	7	5.00	1.00	1.00	35.00	
WT 6X7	39	1	7	5.42	1.00	1.00	37.94	
	40/42/43	1	490	3.72	1.00	0.25	37.98	
	57	1	490	0.33	1.92	0.50	12.94	
	5	1	490	1.55	5.00	0.25	79.11	
less moor		-1	490	1.00	1.00	0.25	-10.21	
L2.5X2X/3/16	36	3	2.75	3.00	1.00	1.00	24.75	
Total for Frame 11:								0.49

By: SSM Date: 5/20/97 Job No. 23423
Project: ACB Lighter Test Bed Calc No. 9.1
Subject: Weight Estimate

		Weight of R2 Side Pontoon (Continued)						
Description		Number	Unit Wt	Length/ Area	Length/ Area	Thickness	Weight	Total Weight
			(Lb/Ft) or (Lb/cuFt)	Ft or SqFt	Ft or SqFt	Inches	Lbs	Kips
Frame 12								
Plate	44	1	490	6.00	7.79	0.50	954.28	
	45	4	490	0.21	0.21	0.50	3.53	
	46/49	1	490	1.68	1.00	0.25	17.15	
	24	1	490	3.00	4.17	1.00	510.46	
pls		1	490	16.29	1.00	0.75	498.88	
less oponning		-1	490	3.00	4.17	0.50	-255.41	
less openning		-1	490	0.89	1.50	1.00	-54.51	
L2.5x2x3/16	47	4	2.75	2.00	1.00	1.00	22.00	
	41	4	2.75	2.55	1.00	1.00	28.05	
Total for Frame 12:								1.72
						Frame total=		6.77

By: SSM Date: 5/20/97 Job No. 23423
Project: ACB Lighter Test Bed Calc No. 9.1
Subject: Weight Estimate

		Weight of R2 Side Pontoon (Continued)						
Description		Number	Unit Wt	Length/ Area	Length/ Area	Thickness	Weight	Total Weight
			(Lb/Ft) or (Lb/cuFt)	Ft or SqFt	Ft or SqFt	Inches	Lbs	Kips
Sect C								
bar	1	8	490	0.17	0.17	2.00	18.22	
	3	1	490	0.56	0.83	1.25	23.85	
Sect D								
	4	1	490	0.56	1.42	1.25	40.81	
Sect G								
	5	1	490	2.83	3.79	0.50	218.98	
	27	1	490	2.83	4.00	1.00	462.23	
Sect H								
	28	1	490	1.00	7.75	0.50	158.23	
L2.5X2X3/16	29	3	2.75	1.00	1.00	1.00	8.25	
L2.5X2X3/16	45	2	2.75	0.50	1.00	1.00	2.75	
Sect H								
	30	1	490	1.25	7.75	0.50	197.79	
L2.5X2X3/16	31	3	2.75	1.42	1.00	1.00	11.72	
L2.5X2X3/16	32	1	2.75	0.96	1.00	1.00	2.64	
	33	1	490	1.00	0.58	1.00	23.68	
	34	1	490	0.25	1.25	0.25	3.19	
	35	2	490	5.00	0.42	0.38	64.31	
	39	1	490	0.71	1.00	1.00	28.99	
Det K								
	13	2	490	2.83	7.35	0.50	849.35	
	14	2	490	3	7.35	0.25	450.19	
	6	2	490	0.125	0.58	0.50	2.96	
	7	2	490	0.33	0.58	0.50	7.82	
	8	2	490	0.33	5.83	0.50	78.56	
	9	2	490	0.125	5.83	0.50	29.76	
	10	2	490	0.58	2.67	0.50	63.23	
	11	4	490	0.58	1.33	2.50	314.99	
	12	2	490	0.58	1.33	0.50	31.50	
	15	12	490	0.5	1.44	0.25	88.20	
	16	4	490	0.33	6.75	0.75	272.87	

Weight of R2 Side Pontoon (Continued)

Description		Number	Unit Wt (Lb/Ft) or (Lb/cuFt)	Length/ Area Ft or SqFt	Length/ Area Ft or SqFt	Thickness Inches	Weight Lbs	Total Weight Kips
	17	2	490	0.58	2.67	0.25	31.62	
	18	2	490	0.58	1.125	0.25	13.32	
	19	4	490	0.58	1.33	1.00	126.00	
	21	2	490	0.58	1.33	0.25	15.75	
	22	4	490	0.125	1.33	0.50	13.58	
	23	4	490	0.125	2.67	0.50	27.26	
	24	4	490	0.125	0.79	0.50	8.06	
	25	2	490	0.58	0.75	0.50	17.76	
	26	4	490	0.67	1.33	2.50	363.87	
	44	4	490	0.83	6.75	0.38	343.15	
L4X3X1/4	20	2	5.8	6.75			78.30	
Det L								
	40	2	490	0.5	3.67	0.75	112.39	
	41	2	490	0.5	4.13	0.75	126.48	
	42	1	490	3	4.13	1.00	505.93	
	43	1	490	3	3.67	0.50	224.79	
less openning		-1	490	0.85	1.5	1.00	-52.06	
less area for item 43		-1	490	0.41	3.67	0.50	-30.72	
Det M/N								
	36	2	490	0.71	7.79	0.50	225.85	
L2.5X2X3/	37	6	2.75	0.71	1	1.00	11.72	
L2.5X2X3/	38	2	2.75	0.38	1	1.00	2.09	
					Detail total		5620.18	5.62

By: SSM Date: 5/20/97 Job No. 23423
Project: ACB Lighter Test Bed Calc. No. 9.1
Subject: Weight Estimate

		R1 CONNECTOR					
Description	Number	Unit Wt	Length/ Area	Length/ Area	Thickness	Weight	Total Weight
		(Lb/Ft) or (Lb/cuFt)	Ft or SqFt	Ft or SqFt	Inches	Lbs	Kips
FRAME							
3.5x2.5x.25 TS	1	8.81	25	1	1	220.25	
3.5x2.5x.25 TS	1	8.81	9	1	1	79.29	
3.5x2.5x.25 TS	1	8.81	10.79	1	1	95.06	
3.5x2.5x.25 TS	1	8.81	25.33	1	1	223.16	
3.5x2.5x.25 TS	2	8.81	4.5	1	1	79.29	
3.5x2.5x.25 TS	2	8.81	3.33	1	1	58.67	
3.5x2.5x.25 TS	2	8.81	4.67	1	1	82.29	
5.0x2.0x.25 TS	2	10.51	2.25	1	1	47.30	
Bent Plate	2	490	6.33	0.48	0.25	62.03	
Bent Plate	2	490	6.33	0.33	0.25	43.07	
Pl	4	490	0.58	1.17	1.5	165.83	
	2	490	0.92	2.13	0.5	80.02	
	2	490	0.33	0.50	0.375	5.05	
	2	490	0.25	1.54	0.75	23.58	
	2	490	0.33	1.71	0.375	17.28	
	1	490	0.5	1.71	0.25	8.73	
	4	490	0.92	1.17	1	175.81	
Tube 18"	1	490	4.25	0.92	0.875	139.25	
Tube 17.75"	1	490	4.12	0.92		154.27	
Total:							1.76
BEARING BLOCK							
Plate	1	490	0.92	2.5	1	94	
Plate	4	490	0.31	0.92	0.5	23	
Plate	4	490	0.58	1.167	1.5	166	
Plate	2	490	2.125	6.33	1.5	1648	
Plate	1	490	2.11	1	0.375	32	
Plate	2	490	0.21	1.54	0.75	20	
L4x3x3/8	4	8.5	2.25			77	
L4x3x3/8	2	8.5	2.67			45	
L4x3x3/8	2	8.5	1.83			31	
L8x8x1/2	1	26.4	1.79			47	
Total							2.18
FIN ASSEMBLY							
Tube:							
OD16.25	1	490	3.35	2.65	1.75	634	
OD17.5	1	490	4.19	0.5	0.75	64	
OD18.25	1	490	4.65	2.81	0.25	133	
OD11.75	1	490	2.88	0.458	0.375	20	
OD 2.25	1	490	0.123	5.083	0.375	10	
OD 12	1	490	0.721	0.292	0.25	2	
OD 12.625	1	490	0.802	0.083	0.25	1	
Plate:							
Dia 18.25	1	490	1.817	1	1	74	
Dia 15	1	490	1.227	1	0.75	38	
Dia 12.75	1	490	0.894	1	0.5	18	
Dia 16.25	1	490	1.44	1	9	529	

By: SSM Date: 5/20/97 Job No. 23423
Project: ACB Lighter Test Bed Calc. No. 9.1
Subject: Weight Estimate

			R1 CONNECTOR (cont)					
Description		Number	Unit Wt	Length/ Area	Length/ Area	Thickness	Weight	Total Weight
			(Lb/Ft) or (Lb/cuFt)	Ft or SqFt	Ft or SqFt	Inches	Lbs	Kips
Dia 6		1	490	0.2	1	0.75	6	
Dia 12.75		1	490	0.89	1	1	36	
Dia 8		1	490	0.35	1	0.5	7	
		8	490	0.25	0.58	0.5	24	
		1	490	0.0313	2.75	0.75	3	
Screws/Washer/Nuts							1	
Total:								1.60
LEVER AND ROLLER ASSEMBLY								
		2	490	0.208	4.95	0.75	63	
		2	490	0.167	0.458	0.75	5	
		8	490	0.007	1	9.5	22	
DIA 1		1	490	0.005	1.33		3	
DIA 1		1	490	0.005	1.79		4	
DIA 5/8		1	490	0.002	0.92		1	
pipe		2	3		7		42	
pipe		2	1.68		0.208		1	
MISC							1	
Total:								0.14
GIULLOTINE								
Outboard mating guillotine							130	
Inboard mating guillotine							115	
Reaction guillotine							150	
Total:								0.40
TOTAL FOR R1 CONNECTOR:								6.08
TOTAL FOR 3 CONNECTORS:								18.24

By: SSM Date: 5/20/97 Job No. 23423
Project: ACB Lighter Test Bed Calc. No. 9.1
Subject: Weight Estimate

			R2 CONNECTOR					
Description		Number	Unit Wt	Length/ Area	Length/ Area	Thickness	Weight	Total Weight
			(Lb/Ft) or (Lb/cuFt)	Ft or SqFt	Ft or SqFt	Inches	Lbs	Kips
Lower Pin Assembly								
Plate:		1	490	6.861	1	1	280.16	
		1	490	0.264	1	0.5	5.39	
Padaeyes		1	490	0.16	1	1	6.53	
Tude		1	490	0.0903	1	1	3.69	
Bars		1	490	20.5	1	1	837.08	
Fender							196.80	
Total								1.33
Upper Pin Assembly:								
Plate:		1	490	6.862	1	0.5	140.10	
Padaeyes		1	490	0.0764	1	1	3.12	
Bars		1	490	5.646	1	1	230.55	
Total:								0.37
Guillotine:								
Upper Plates		1					40.00	
Lower Plates		1					185.00	
Release Mechanism								
Frame Assembly		Dwg 173						
	4	1	490	0.85	1.167	0.375	15.19	
	5	4	490	0.25	0.24	0.375	3.68	
TS2x2x1/4	6	2	5.41			2.5	27.05	
	7	2	490	0.104	2.5	0.25	5.31	
	8	1	490	0.083	0.229	1	0.78	
	9	6	490	0.083	0.146	0.5	1.48	
	10	9	490	0.083	0.229	0.5	3.49	

By: SSM Date: 5/20/97 Job No. 23423
Project: ACB Lighter Test Bed Calc. No. 9.1
Subject: Weight Estimate

			R2 CONNECTOR (cont)					
Description		Number	Unit Wt	Length/ Area	Length/ Area	Thickness	Weight	Total Weight
			(Lb/Ft) or (Lb/cuFt)	Ft or SqFt	Ft or SqFt	Inches	Lbs	Kips
Release bar assembly								
Bar		1	490	0.167	0.83	1	5.66	
misc							5.00	
Total:								0.29
TOTAL FOR R2 CONNECTOR:								2.00
TOTAL FOR 3 CONNECTORS:								5.99

9.2 Raked Test Bed No. 1 Weight Estimate

By: SSM Date: 5/20/97 Job No. 23423 -019
Project: ACB Lighter Test Bed Calc No. 9.2
Subject: Weight Estimate

TRANSPORT WEIGHT ESTIMATE OF R1 SIDE PONTOON -- RAKED TEST BED #1								
					Weight Kips			
R1 Top Deck					6.92			
R1 Deck Closure					0.79			
F1 Cover Panels					0.48			
R1 Bottom Deck					4.76			
R1 Sides					6.14			
R1 Frames					7.96			
Details					7.26			
Misc	(ladders, iso wp,mooring rings,conn)				1.38		subtotal	35.70
R1 Transverse Hawsepipe					1.36			
R1 Longitudinal Hawsepipe					1.18			
R1 Connector					12.16			
F1 Connector					1.70		subtotal	52.09
Iso A&B					1.91			
Subtotal					54.00			
Mill Tolerance and Welds (5%)					2.70			
Miscellaneous Steel (5%)					2.70			
			Total		59.40			

By: SSM Date: 5/20/97 Job No. 23423
Project: ACB Lighter Test Bed Calc No. 9.2
Subject: Weight Estimate

TRANSPORT WEIGHT ESTIMATE OF MIDDLE PONTOON -- RAKED TEST BED #1

					Weight Kips			
Top Deck					6.68			
Bottom Deck					4.02			
Sides					7.37			
Frames					4.71			
Details					-			
Misc	**(ladder, iso wp, liftpts,conn)**				2.50		subtotal	25.28
Iso C					0.51			
Subtotal					25.78			
Mill Tolerance and Welds (5%)					1.29			
Miscellaneous Steel (5%)					1.29			
			Total		28.36			

By: SSM
Project: ACB Lighter Test Bed
Subject: Weight Estimate

Date: 5/20/97

Job No. 23423
Calc No. 9.2

TRANSPORT WEIGHT ESTIMATE OF R2 SIDE PONTOON -- RAKED TEST BED #1

					Weight Kips			
R2 Top Deck					7.11			
R1 Deck Closure					0.40			
F1 Cover Panels					0.48			
R2 Bottom Deck					4.76			
R2 Sides					6.91			
R2 Frames					5.45			
Details					7.78			
Misc					1.30		subtotal	34.18
R2 Transverse Hawsepipe					1.91			
R1 Longitudinal Hawsepipe					1.18			
R1 Connector					6.08			
R2 Connector					1.77			
F1 Connector					1.70		subtotal	46.82
Iso A&B					1.91			
Subtotal					48.73			
Mill Tolerance and Welds (5%)					2.44			
Miscellaneous Steel (5%)					2.44			
			Total		53.61			

By: SSM
Project: ACB Lighter Test Bed
Subject: Weight Estimate

Date: 5/20/97

Job No. 23423
Calc No. 9.2

TRANSPORT WEIGHT ESTIMATE OF THREE PONTOONS -- RAKED TEST BED #1								
					Weight Kips			
R1 Side Pontoon (w/o rem iso)					52.09			
Middle Pontoon(w/o rem iso)					25.28			
R2 Side Pontoon (w/o rem iso)					46.82			
Fenders					2.47			
				subtotal	126.66			
Mill Tolerance (5%)					6.33			
Miscellaneous Steel (5%)					6.33			
				total	139.32	kips		
					62.20	LT		

By: SSM Date: 5/20/97 Job No. 23423
Project: ACB Lighter Test Bed Calc No. 9.2
Subject: Weight Estimate

			WEIGHT OF R1 SIDE PONTOON					
Description		Number	Unit Wt	Length/ Area	Length/ Area	Thickness	Weight	Total Weight
			(Lb/Ft) or (Lb/cuFt)	Ft or SqFt	Ft or SqFt	Inches	Lbs	Kips
Top Deck Framing		Dwg 51						
deck plate								
	2	2	490	2.00	2.9167	0.5	238.20	
less plate	2A	-1	490	1.25	1.0	0.5	-25.52	
less plate	2B	-1	490	0.708	0.708	0.5	-10.24	
	3	2	490	5.0	2.9167	0.25	297.75	
	3	1	490	10.917	8.0	0.25	891.53	
less plate	3A	-1	490	3.83	3	0.25	-117.29	
	21	1	490	3.83	3	0.5	234.59	
	4	1	490	4.1667	8.0	0.75	1020.84	
less plate	4A	-1	490	2.167	7.0	0.75	-464.49	
	33	1	490	13.92	8.0	0.25	1136.80	
less plate	33A	-1	490	3.96	4	0.25	-161.70	
less plate	33B	-1	490	10.75	1.21	0.25	-132.78	
	28	1	490	3.96	4	0.5	323.40	
	5	1	490	4.0	8.0	0.75	980.00	
less plate	5A	-1	490	2.33	1.2	0.75	-86.34	
less plate	5B	-1	490	1.25	1.0	0.75	-38.28	
less plate	5C	-1	490	0.708	0.708	0.75	-15.36	
less hawes	3C	-2	490	1.6	1.0	0.25	-32.87	
less conn	3D	-8	490	0.5	0.3	0.25	-13.60	
Weight								4.02
PL	27	14	490	0.5	1.77	0.5	252.96	
	32	16	490	0.5	1.83	0.3	149.45	
L6x4x3/8	6	5	12.3	3.45	1	1	212.18	
	7	1	12.3	2.45	1	1	30.14	
	8	2	12.3	2.76	1	1	67.90	
	9	12	12.3	3.58	1	1	528.41	
	12	7	12.3	4.15	1	1	357.32	
	13	1	12.3	2.47	1	1	30.38	
	15	1	12.3	1.92	1	1	23.62	
	16	2	12.3	1.66	1	1	40.84	
	20	9	12.3	3.48	1	1	385.24	
	23	14	12.3	4.15	1	1	714.63	
	24	1	12.3	1.24	1	1	15.25	
	25	1	12.3	2.083	1	1	25.62	
	29	1	12.3	1.9	1	1	23.37	
	30	1	12.3	3.167	1	1	38.95	
Weight								2.90
Total Weight for Top Deck Framing:								6.92

By: SSM Date: 5/20/97 Job No. 23423
Project: ACB Lighter Test Bed Calc No. 9.2
Subject: Weight Estimate

			WEIGHT OF R1 SIDE PONTOON					
Description		Number	Unit Wt	Length/ Area	Length/ Area	Thickness	Weight	Total Weight
			(Lb/Ft) or (Lb/cuFt)	Ft or SqFt	Ft or SqFt	Inches	Lbs	Kips
Bottom Deck Framing			Dwg 52					
Deck Plate								
	2	1	490	2.0	8	0.38	245.00	
less plate	2A	-2	490	1	1.25	0.38	-38.28	
less plate	2B	-2	490	0.75	1.00	0.38	-22.97	
less holes	2C	-3	490	0.35	1	0.38	-16.0[illegible]	
	3	1	490	9.6	8.0	0.31	978.98	
	4	1	490	8.17	8.0	0.31	834.02	
	5	1	490	4.17	7.5	0.5	638.03	
	7	1	490	12.10	8.0	0.31	1235.21	
	16	1	490	6.3	8.0	0.25	516.13	
less conn		-8	490	0.5	0.3	0.31	-16.84	
Weight								4.35
L2.5x2x3/16	6	2	2.75	3.58	1	1	19.69	
	8	2	2.75	4.15	1	1	22.83	
	9	2	2.75	4.16	1	1	22.88	
	10	2	2.75	9.55	1	1	52.53	
	11	3	2.75	2.167	1	1	17.88	
	12	4	2.75	5.45	1	1	59.95	
	13	6	2.75	8.28	1	1	136.62	
	14	2	2.75	6.26	1	1	34.43	
	15	2	2.75	7.54	1	1	41.47	
Weight								0.41
Total Weight for Bottom Deck Framing:								4.76

By: SSM Date: 5/20/97 Job No. 23423
Project: ACB Lighter Test Bed Calc No. 9.2
Subject: Weight Estimate

WEIGHT OF R1 SIDE PONTOON

Description		Number	Unit Wt (Lb/Ft) or (Lb/cuFt)	Length/ Area Ft or SqFt	Length/ Area Ft or SqFt	Thickness Inches	Weight Lbs	Total Weight Kips
R1 Cover	Dwg 128 (same as for Center Test Bed #1)							
L4x4x1/4		9	6.6	2.33			138.40	
L4x4x1/4		2	6.6	7.00			92.40	
Pl 1/4		1	490	2.33	7.0	0.25	166.50	
								0.40
F1 Cover	Dwg 128							
Grating		1	34	11.00	1.2		450.32	
Pl		1	490	1.48	1.97	0.25	29.76	
								0.48

By: SSM Date: 5/20/97 Job No. 23423
Project: ACB Lighter Test Bed Calc No. 9.2
Subject: Weight Estimate

		Weight of R1 Side Pontoon (Continued)						
Description		Number	Unit Wt	Length/ Area	Length/ Area	Thickness	Weight	Total Weight
			(Lb/Ft) or (Lb/cuFt)	Ft or SqFt	Ft or SqFt	Inches	Lbs	Kips
	Dwg 53							
Section A								
Plate	1	1	490	38.00	7.79	0.19	2266.99	
less plate		-1	490	9.29	1	0.19	-71.13	
less shear		-4	490	2.17	1.83	0.19	-121.45	
less conn		-8	490	1.00	1.17	0.19	-71.48	
add shear		4	490	2.17	1.83	1.25	809.65	
add conn		8	490	1.00	1.17	1.00	381.22	
misc conn		4	0.05				0.20	
misc conn		3	0.01				0.03	
misc conn		1	0.03				0.03	
Weight								3.19
L2.5x2x3/16	2	8	2.75	9.55	1.00	1.00	210.10	
	3	2	2.75	5.71	1.00	1.00	31.41	
	4	2	2.75	3.35	1.00	1.00	18.43	
	5	3	2.75	18.79	1.00	1.00	155.02	
	6	1	2.75	3.91	1.00	1.00	10.75	
	8	1	2.75	9.90	1.00	1.00	27.23	
	11	1	2.75	3.82	1.00	1.00	10.51	
	24	2	2.75	7.25	1	1	39.88	
Weight								0.50
Section B								
Plate	9	1	490	38.58	7.79	0.19	2301.00	
less plate		-1	490	10.58	1	0.19	-81.00	
less R1		-1	490	2.17	7.00	0.19	-116.12	
less ladder		-7	490	0.44	1	0.19	-23.58	
less moor		-2	490	1.17	0.67	0.19	-11.97	
less pipe		-1	490	1.07	1	0.19	-8.19	
Weight								2.06
L2.5x2x3/16	7	2	2.75	6.00	1.00	1.00	33.00	
	12	4	2.75	2.75	1	1	30.25	
	14	1	2.75	9.88	1	1	27.17	
	15	3	2.75	2.24	1	1	18.48	
	16	1	2.75	6.54	1	1	17.99	
	17	3	2.75	5.36	1	1	44.22	
	18	3	2.75	8.27	1	1	68.23	
	19	1	2.75	5.38	1	1	14.78	

		Weight of R1 Side Pontoon (Continued)						
Description		Number	Unit Wt	Length/ Area	Length/ Area	Thickness	Weight	Total Weight
			(Lb/Ft) or (Lb/cuFt)	Ft or SqFt	Ft or SqFt	Inches	Lbs	Kips
Section B (cont)								
	21	2	2.75	1.33	1	1	7.33	
	22	1	2.75	9.25	1	1	25.44	
	23	1	2.75	2.08	1	1	5.73	
	25	4	490	0.21	0.21	0.5	3.60	
L 6X4X3/8								
	13	2	12.3	3.49	1.00	1.00	85.85	
Weight								0.38
Total Weight for Sections A and B:								6.14
	Dwg 54							
Frame 1								
Plate	1	1	490	2.50	6.00	0.50	306.25	
less open	1A	-1	490	1.54	1.54	0.50	-48.42	
L2.5x2x3/16	2	1	2.75	0.54	1.00	1.00	1.49	
	3	1	2.75	1.42	1.00	1.00	3.91	
	4	3	490	0.25	1.29	0.25	9.88	
	23	1	490	0.25	1.79	0.25	4.57	
	55	1	2.75	1.94	1.00	1.00	5.34	
Total for Frame 1:								0.28
Frame 2								
L4x3x1/4	5	2	6.2	3.00	1.00	1.00	37.20	
Plate	6	1	490	1.25	4.00	0.25	51.04	
	7	2	490	0.25	1.00	0.25	5.10	
WT6x7	9	1	7	8.00	1.00	1.00	56.00	
	10	4	490	0.16	0.42	0.25	2.66	
	11	1	490	3.96	5.47	0.25	221.12	
minus mooring		-1	490	1.00	1.00	0.25	-10.21	
	12	1	490	0.50	4.00	0.50	40.83	
	13	1	490	0.50	5.00	0.25	25.52	
L2.5x2x3/16	19	1	2.75	3.75	1.00	1.00	10.31	
WT6x7	56	1	7	4.19	1.00	1.00	29.33	
Total for Frame 2:								0.47

By: SSM Date: 5/20/97 Job No. 23423
Project: ACB Lighter Test Bed Calc No. 9.2
Subject: Weight Estimate

		Weight of R1 Side Pontoon (Continued)						
Description		Number	Unit Wt	Length/ Area	Length/ Area	Thickness	Weight	Total Weight
			(Lb/Ft) or (Lb/cuFt)	Ft or SqFt	Ft or SqFt	Inches	Lbs	Kips
Frame 3								
Plate	6	1	490	1.25	4.00	0.25	51.04	
	7	2	490	0.25	1.00	0.25	5.10	
WT6x7	8	1	7	6.00	1.00	1.00	42.00	
	10	2	490	0.16	0.42	0.25	1.33	
	12	1	490	0.50	4.00	0.50	40.83	
	17	1	490	0.16	1.44	0.25	2.29	
	18	1	490	0.16	1.00	0.25	1.59	
L2.5x2x3/16	19	2	2.75	3.75	1.00	1.00	20.63	
WT6x7	21	1	7.0	7.57	1.00	1.00	52.99	
	22	1	490	0.50	6.80	0.25	34.71	
	28	1	490	4.00	7.30	0.19	223.56	
Total for Frame 3								0.48
Frame 4								
WT5x6	24	3	6	0.55	1.00	1.00	9.90	
WT5x6	25	1	6	4.81	1.00	1.00	28.86	
WT5x6	26	1	6	1.44	1.00	1.00	8.64	
pl	27	1	490	7.79	7.97	0.19	475.35	
open		-1	490	1.83	1.21	0.19	-16.95	
Total for Frame 4								0.51
Frame 5&8								
	7	2	490	0.25	1.00	0.25	5.10	
WT6x7	8	2	7	6.00	1.00	1.00	84.00	
	10	2	490	0.16	0.42	0.25	1.33	
	14	1	490	0.50	7.97	0.50	81.36	
	15	1	490	1.25	7.97	0.25	101.70	
WT 6x7	21	1	7	7.57	1.00	1.00	52.99	
Total for Frame 5								0.32
Total for Frame 8								0.32

By: SSM Date: 5/20/97 Job No. 23423
Project: ACB Lighter Test Bed Calc No. 9.2
Subject: Weight Estimate

		Weight of R1 Side Pontoon (Continued)						
Description		Number	Unit Wt	Length/ Area	Length/ Area	Thickness	Weight	Total Weight
			(Lb/Ft) or (Lb/cuFt)	Ft or SqFt	Ft or SqFt	Inches	Lbs	Kips
Frame 6/7	(Used same weight as for Center Test Bed #1)							
Plate		1	490	2.83	7.54	0.50	435.65	
		1	490	3.00	7.54	0.25	230.91	
		1	490	7.30	1.00	0.25	74.52	
		1	490	6.90	1.00	0.50	140.88	
		1	490	3.33	1.00	2.50	339.94	
		1	490	1.55	1.00	1.00	63.29	
		1	490	3.79	1.00	0.19	29.02	
		1	490	5.00	1.00	0.75	153.13	
		1	490	12.64	1.00	0.38	193.55	
		-2	490	0.67	1.33	0.50	-36.39	
WT 5x6		1	6	7.50	1.00	1.00	45.00	
Total for Frame 6								1.67
Total for Frame 7								1.67
	Dwg 55							
Frame 9	(Used same weight as for Center Test Bed #1)							
Plate		1	490.0	8.00	8.00	0.19	490.00	
WT 5x6		1	6	29.41	1.00	1.00	176.46	
less hawes		-1	490	1.07	1.00	1.00	-43.69	
Total for Frame 9								0.62
Frame 10	(Used same weight as for Center Test Bed Frame #3)							
Plate		1	490	7.79	8.00	0.19	477.14	
		4	490	0.50	2.92	0.50	119.23	
		6	490	0.25	1.29	0.25	19.75	
		2	490	0.16	24.00	0.25	76.44	
		2	490	0.25	2.17	0.50	22.12	
less open		-2	490	2.42	4.00	0.19	-148.23	
WT6X7		2	7	4.00	1.00	1.00	56.00	
L4X3X1/4		1	6.2	2.67	1.00	1.00	16.55	
Total for Frame 10								0.64

		Weight of R1 Side Pontoon (Continued)						
Description		Number	Unit Wt	Length/ Area	Length/ Area	Thickness	Weight	Total Weight
			(Lb/Ft) or (Lb/cuFt)	Ft or SqFt	Ft or SqFt	Inches	Lbs	Kips
Frame 11	(Used same weight as for Center Test Bed Frame #2)							
Plate		1	490	2.90	7.79	0.19	173.01	
		1	490	1.25	2.85	0.25	36.42	
less moor		-1	490	1.00	1.00	0.19	-7.66	
less access		-1	490	1.33	2.00	0.19	-20.37	
less pipe		-1	490	1.04	1.00	0.19	-7.96	
Pl		2	490	0.25	0.85	0.25	4.34	
		1	490	0.50	2.85	0.50	29.09	
		12	490	0.16	0.42	0.25	7.97	
L2.5X2X3/16		2	2.75	1.19	1.00	1.00	6.53	
WT6X7		1	7	0.52	1.00	1.00	3.64	
		1	7	3.94	1.00	1.00	27.58	
		1	7	1.44	1.00	1.00	10.08	
		1	7	2.85	1.00	1.00	19.95	
		1	7	7.79	1.00	1.00	54.53	
Total for Frame 11:								0.34
Frame 12	(Used same weight as for Center Test Bed Frame #1)							
Plate		1	490	6.04	7.79	0.50	961.15	
less R1		-1	490	2.17	7.00	0.50	-309.66	
less hawes		-1	490	1.77	1.00	0.50	-36.14	
		2	490	0.25	0.43	0.25	2.18	
		4	490	0.21	0.21	0.50	3.53	
L2.5x2x3/16		2	2.75	1.08	1.00	1.00	5.96	
		2	2.75	0.50	1.00	1.00	2.75	
		1	2.75	1.17	1.00	1.00	3.21	
		1	2.75	1.96	1.00	1.00	5.38	
		1	2.75	2.17	1.00	1.00	5.96	
		1	2.75	1.43	1.00	1.00	3.92	
Total for Frame 12:								0.65
						Frame total=		7.96

Weight of R1 Side Pontoon -- Continued

Description		Number	Unit Wt (Lb/Ft) or (Lb/cuFt)	Length/ Area Ft or SqFt	Length/ Area Ft or SqFt	Thickness Inches	Weight Lbs	Total Weight Kips
	Dwg 55							
Sect C								
bar	34	8	490	0.17	0.17	2.00	18.22	
	36	4	490	0.56	0.83	1.25	94.90	
Sect D								
	37	4	490	0.56	1.42	1.25	163.22	
Sect G								
	38	2	490	0.88	0.88	0.25	15.81	
	39	1	490	1.10	7.97	0.25	89.50	
	40	1	490	0.50	7.97	0.25	40.68	
	Dwg 56							
Sect H	(Used weight from Center Test Bed SectG)							
	5	1	490	2.23	7.79	0.19	133.00	
L2.5X2X3/16	27	3	2.75	2.75	1.00	1.00	22.69	
Sect J	(Used weight from Center Test Bed SectH)							
	28	1	490	1.00	7.75	0.50	158.23	
L2.5X2X3/16	29	3	2.75	1.00	1.00	1.00	8.25	
L2.5X2X3/16	45	2	2.75	0.50	1.00	1.00	2.75	
Sect K	(Used weight from Center Test Bed SectJ)							
	30	1	490	1.25	7.75	0.50	197.79	
L2.5X2X3/16	31	3	2.75	1.42	1.00	1.00	11.72	
L2.5X2X3/16	32	1	2.75	0.96	1.00	1.00	2.64	
	33	1	490	1.00	0.58	1.00	23.68	
	34	1	490	0.25	1.25	0.25	3.19	
	35	2	490	5.00	0.42	0.38	64.31	
	39	1	490	0.71	1.00	1.00	28.99	

By: SSM Date: 5/20/97 Job No. 23423
Project: ACB Lighter Test Bed Calc. No. 9.2
Subject: Weight Estimate

		Weight of R1 Side Pontoon -- Continued						
Description		Number	Unit Wt	Length/ Area	Length/ Area	Thickness	Weight	Total Weight
			(Lb/Ft) or (Lb/cuFt)	Ft or SqFt	Ft or SqFt	Inches	Lbs	Kips
Sect L	(Used same weight as for Center Test Bed Sect K)							
	13	2	490	2.83	7.35	0.50	849.35	
	14	2	490	3	7.35	0.25	450.19	
	6	2	490	0.125	0.58	0.50	2.96	
	7	2	490	0.33	0.58	0.50	7.82	
	8	2	490	0.33	5.83	0.50	78.56	
	9	2	490	0.125	5.83	0.50	29.76	
	10	2	490	0.58	2.67	0.50	63.23	
	11	4	490	0.58	1.33	2.50	314.99	
	12	2	490	0.58	1.33	0.50	31.50	
	15	12	490	0.5	1.44	0.25	88.20	
	16	4	490	0.33	6.75	0.75	272.87	
	17	2	490	0.58	2.67	0.25	31.62	
	18	2	490	0.58	1.125	0.25	13.32	
	19	4	490	0.58	1.33	1.00	126.00	
	21	2	490	0.58	1.33	0.25	15.75	
	22	4	490	0.125	1.33	0.50	13.58	
	23	4	490	0.125	2.67	0.50	27.26	
	24	4	490	0.125	0.79	0.50	8.06	
	25	2	490	0.58	0.75	0.50	17.76	
	26	4	490	0.67	1.33	2.50	363.87	
	44	4	490	0.83	6.75	0.38	343.15	
L4X3X1/4	20	2	5.8	6.75			78.30	
Sect M/N	(Used same weight as for Center Test Bed)							
	36	2	490	0.71	7.79	0.50	225.85	
L2.5X2X3/16	37	6	2.75	0.71	1	1.00	11.72	
L2.5X2X3/16	38	2	2.75	0.38	1	1.00	2.09	
	Dwg 57							
Plan								
	1	1	490	2.21	2.79	1.00	251.77	
	2	4	490	0.41	1.54	0.50	51.56	
	3	1	490	1.21	1.23	0.50	30.39	
	4	1	490	0.65	1.21	0.50	16.06	
	5	2	490	1.23	1.85	0.50	92.92	
	6	2	490	0.19	0.67	0.50	5.20	
	7	2	490	1.08	1.85	0.25	40.79	
	8	2	490	0.67	1.67	1.50	137.07	
	9	1	490	0.88	1.21	0.50	21.74	

By: SSM Date: 5/20/97 Job No. 23423
Project: ACB Lighter Test Bed Calc. No. 9.2
Subject: Weight Estimate

		Weight of R1 Side Pontoon -- Continued						
Description		Number	Unit Wt	Length/ Area	Length/ Area	Thickness	Weight	Total Weight
			(Lb/Ft) or (Lb/cuFt)	Ft or SqFt	Ft or SqFt	Inches	Lbs	Kips
Plan (cont)								
	10	2	490	0.88	1.23	0.5	44.20	
	11	2	490	0.19	10	0.5	77.58	
	12	2	490	0.125	10	0.5	51.04	
	13	2	490	1.85	12	0.5	906.50	
	14	2	490	0.25	0.54	0.25	2.76	
	15	1	490	0.46	0.5	0.25	2.35	
	16	1	9.5	1.21			11.495	
	17	2	9.5	2			38	
	18	1	490	1	3.5	0.5	71.46	
	19	1	490	1.25	3.5	0.5	89.32	
L2.5x2x3/16	20	1	2.75	1.24			3.41	
L2.5x2x3/16	21	1	2.75	0.96			2.64	
	22	1	490	0.25	1.35	0.25	3.45	
L2.5x2x3/16	23	2	2.75	0.69			3.795	
	24	2	490	0.71	3.21	0.5	93.06	
	25	1	490	0.58	1	1	23.68	
	27	1	490	0.71	1	1	28.99	
	28	4	490	0.083	1.9	0.5	12.88	
	29	1	490	0.52	1.21	0.5	12.85	
	30	2	490	0.88	0.96	0.5	34.50	
	31	1	490	1.88	14.31	0.5	549.27	
					Detail total		7258.02	7.26

By: SSM Date: 5/20/97 Job No. 23423
Project: ACB Lighter Test Bed Calc No. 9.2
Subject: Weight Estimate

		Weight of R1 Side Pontoon (Continued)						
Description		Number	Unit Wt	Length/ Area	Length/ Area	Thickness	Weight	Total Weight
			(Lb/Ft) or (Lb/cuFt)	Ft or SqFt	Ft or SqFt	Inches	Lbs	Kips
R1 Long Hawsepipe		(Quantity for one)						
	Dwg 100							
pipe	2	1	63.442	7.72			489.77	
reducer	3	1					65	
bend	4	1					81.5	
pipe	5	1	40.48	4.5			182.16	
cone	6	1	490	4.19	0.33	0.375	21.17	
	7	2	490	1.27	1.31	0.38	51.07	
	8	1	490	1.00	1.27	0.38	19.45	
	9	1	490	1.25	1.31	0.38	25.13	
cover	11	1	490	1.17	1.83	0.50	43.60	
hinge	12	1					negligible	
Detail1	13	1	-	-	-	-	200.00	
							1178.85	1.18
R1 Transverse Hawsepipe			(Quantity for one)					
	Dwg 101							
pipe	2	1	63.442	4.8			304.52	
reducer	3	1					65	
cone	4	1	490	4.19	0.33	0.375	21.17	
	5	1	490	1	3.96	0.75	121.28	
	6	2	490	1.53	3.79	0.375	177.59	
	7	2	490	1	1.5	0.375	45.94	
	8	1	490	0.33	1.72	0.375	8.69	
	9	1	490	0.33	1.91	0.375	9.65	
	10	1	490	1	3.79	0.375	58.03	
	11	1	490	1.83	4.15	0.25	77.53	
Detail 2	12	1	-	-	-	-	430.00	
cover	14	1	490	1.167	1.67	0.5	39.79	
hinge	15	1					negligible	
					R1 Hawspipe Total		1359.19	1.36

Weight of R1 Side Pontoon (Continued)

Description		Number	Unit Wt (Lb/Ft) or (Lb/cuFt)	Length/ Area Ft or SqFt	Length/ Area Ft or SqFt	Thickness Inches	Weight Lbs	Total Weight Kips
R2 long Hawsepipe		(Quantity for one)						
	Dwg 102							
pipe	2	1					81.5	
reducer	3	1					65	
	4	1	490	2	6.81	0.375	208.56	
	5	2	490	1	1.083	0.375	33.17	
	6	1	490	0.958	1.292	0.375	18.95	
	7	2	490	0.406	0.75	0.375	9.33	
	8	2	490	1	5.167	0.375	158.24	
	9	1	490	0.583	5.67	0.375	50.62	
	10	2	490	0.917	5.67	0.375	159.23	
	11	2	490	1.5	5.67	0.375	260.47	
pipe	12	1	40.48	7.0			283.36	
Detail 1	16	1	-	-	-	-	200.00	
cover	17	1					43.60	
							1572.017	1.57
R2 Transverse Hawsepipe			(Quantity for one)					
	Dwg 103							
	2	1	490	2	6.813	0.375	208.65	
	3	2	490	1	1.083	0.375	33.17	
	4	2	490	0.44	1	0.375	13.48	
	5	2	490	0.41	0.75	0.375	9.42	
	6	2	490	1	4.33	0.375	132.61	
	7	1	490	0.58	4.83	0.375	42.90	
	8	2	490	0.917	4.83	0.375	135.64	
	9	2	490	1.5	4.83	0.375	221.88	
	10	1	490	1	6.74	0.375	103.21	
	11	1	490	1	6.573	0.375	100.65	
	12	2	490	1.5	6.573	0.375	301.95	
	13	2	490	1	1.5	0.375	45.94	
	14	1	490	1.83	2.67	0.25	49.88	
	15	2	490	0.33	1.49	0.375	15.06	
Detail 3	16	1	-	-	-	-	460.00	
cover	17	2					39.79	
					R2 Hawspipe total		1914.20	1.91

Weight of R1 Side Pontoon (Continued)

Description		Number	Unit Wt (Lb/Ft) or (Lb/cuFt)	Length/ Area Ft or SqFt	Length/ Area Ft or SqFt	Thickness Inches	Weight Lbs	Total Weight Kips
	Dwg 110							
Ladder#1								
	2	7	25				350	
	3	2	490	0.474	0.474	0.25	4.59	
	4	1	490	0.474	1.67	0.25	8.08	
bar	5	1	490	0.0055	2.167	1	5.84	
					Ladder#1 total=		368.51	0.37
Ladder #2								
	11	2	490	0.208	7.167	0.375	45.65	
	12	7	490	0.0055	1		13.87	
	13	4	3.62	1.167			16.90	
					Ladder #2 total=		81.42	0.08
	Dwg 123							
Lift point								
pin		1	490	0.049	0.33		7.92	
Pl		2	490	1.43	1.79	0.75	156.78	
Masterlink		1	490	0.0167	3.5		28.64	
Pl		1	490	1	1.79	0.75	54.82	
Pl		1	490	1.33	1.79	0.75	72.91	
Misc							20.00	
					Liftpoint total=		341.07	0.34
	Dwg 123							
Iso Connectors								
Iso		1	25				25.00	
Pl		1	490	1.15	1.4	0.25	16.44	
					Iso total=		41.44	0.04

Weight of R1 Side Pontoon (Continued)

Description		Number	Unit Wt (Lb/Ft) or (Lb/cuFt)	Length/ Area Ft or SqFt	Length/ Area Ft or SqFt	Thickness Inches	Weight Lbs	Total Weight Kips
Mooring ring								
	Dwg 125							
Casting		1	490	0.67	1.167	1	31.93	
		2	490	1.083	1.167	1	103.22	
		2	490	0.67	1.083	1	59.26	
bar		1	490	0.0668	0.5		16.37	
					Mooring ring total=		210.77	0.21
Iso A	(Quantity for one, 2 per side pontoon)							
	Dwg 120							
	2	2	490	1.33	1.58	1	171.6	
bar	3	2	490	0.0085	3.63	30.24	76.19	
	4	1	490	0.58	0.65	0.5	7.70	
	5	1	27.48		7.15		196.48	
	6	1	27.48		0.45		12.37	
	7	1	490	0.21	0.25	0.75	1.61	
	8	2	490	0.45	0.33	0.375	4.55	
	9	1	490	0.5	0.5	0.5	5.10	
iso cover	10	1					63.15	
iso		2	25				50.00	
						Iso A total	588.76	0.59
Iso B	(Quantity for one, 2 per side pontoon)							
	Dwg 121							
	2	2	490	1.04	1.04	1	88.33	
	3	2	490				negigible	
	4	2	490	0.58	0.65	0.5	15.39	
	5	1	27.48			7.15	196.48	
	6	1	27.48			0.16	4.40	
	7	1	490	0.25	0.25	0.75	1.91	
	8	2	490	0.5	0.5	0.5	10.21	
		2	25				50.00	
						Iso B total	366.73	0.37

By: SSM Date: 5/20/97 Job No. 23423
Project: ACB Lighter Test Bed Calc No. 9.2
Subject: Weight Estimate

		Weight of R1 Side Pontoon (Continued)						
Description		Number	Unit Wt	Length/ Area	Length/ Area	Thickness	Weight	Total Weight
			(Lb/Ft) or (Lb/cuFt)	Ft or SqFt	Ft or SqFt	Inches	Lbs	Kips
	iso cover							
	10	1	490	1.31	1.56	0.5	41.72	
	11	2	490	0.0085	0.167		1.39	
	12	1	490	0.67	0.96	0.25	6.57	
	13	1	490	0.67	1.19	0.25	8.14	
L2x2x1/4	14	1	3.19		1.67		5.33	
	15						negligible	
						subtotal	63.15	-
Iso C								
	Dwg 130							
TS 6x6x		1	10.4	7.38			76.75	
iso		2	25				50.00	
pl		2	490	0.59	0.54	0.5	312.23	
						Iso C total	126.75	0.13
Corner fender unit		(Quantity for 1, 2 per end pontoon)						
	2	2	490	1.042	1.042	1	88.67	
	3	2	106				212.00	
	4	1	490	0.71	7.44	0.75	161.77	
	5	1	490	0.65	7.44	0.75	148.10	
	8	1	490	0.21	0.21	0.75	1.35	
	9	1	490	0.167	0.33	2	4.50	
					Fender total=		616.40	0.62
Potoon Connectors- Quantity is per assembly								
	Dwg 180	Top & bottom Connectors			(8 per test bed)			
	2	4	490	0.27	0.6	0.375	9.92	
	4	4	490	0.24	0.75	0.25	7.35	
	5	4	490	0.344	0.5	0.25	7.02	
	6	8	490	0.323	0.5	0.25	13.19	
	7	4	490	0.5	0.917	0.25	18.72	
	11	4	490	0.438	0.5	0.25	8.94	
	12	2	490	0.521	0.75	0.375	11.97	
	13	2	490	0.75	0.813	0.5	24.90	
						subtotal	102.01	0.10

		Weight of R1 Side Pontoon (Continued)						
Description		Number	Unit Wt	Length/ Area	Length/ Area	Thickness	Weight	Total Weight
			(Lb/Ft) or (Lb/cuFt)	Ft or SqFt	Ft or SqFt	Inches	Lbs	Kips
	Dwg 181	Shear Connector		(6 per test bed)				
	4	2	490	0.161	0.67	0.1875	1.65	
	5	2	490	0.146	0.531	0.1875	1.19	
	6	2	490	0.224	0.198	0.1875	0.68	
	7	2	490	0.219	0.271	0.1875	0.91	
	9	1	490	1	1.167	0.1875	8.93	
	10	1	490	0.67	0.67	0.1875	3.44	
	11	1	490	0.33	0.646	0.33	2.87	
						subtotal	19.67	0.02
	Dwg 182	Shear Connector		(2 per test bed)				
	4	2	490	0.16	0.67	0.19	1.65	
	5	5	490	0.15	0.67	0.19	3.74	
	6	2	490	0.22	0.20	0.19	0.68	
	7	2	490	0.22	0.27	0.19	0.91	
	9	1	490	1.00	1.17	0.19	8.93	
	10	1	490	0.67	0.67	0.19	3.44	
	11	1	490	0.33	0.65	4.00	34.82	
						subtotal	54.18	0.05

By: SSM Date: 5/20/97 Job No. 23423
Project: ACB Lighter Test Bed Calc No. 9.2
Subject: Weight Estimate

			WEIGHT OF MIDDLE PONTOON					
Description		Number	Unit Wt	Length/ Area	Length/ Area	Thickness	Weight	Total Weight
			(Lb/Ft) or (Lb/cuFt)	Ft or SqFt	Ft or SqFt	Inches	Lbs	Kips
Top Deck Framing								
Deck plate	2	1	490	8.00	40.0	0.25	1260.67	
less conn		-16	490	0.5	0.3	0.25	-27.20	
Weight								3.24
L6x4x3/8	3	23	12.3	3.5	1	1	990.15	
	4	14	12.3	3.58	1	1	616.48	
	5	13	12.3	4.15	1	1	663.59	
	6	14	12.3	4.14	1	1	712.91	
	7	7	12.3	2.167	1	1	186.58	
	8	3	12.3	3.33	1	1	122.88	
	9	2	12.3	2.5	1	1	61.50	
	10	1	12.3	1.38	1	1	16.97	
	11	3	12.3	2	1	1	73.80	
Weight								3.44
Total Weight for Top Deck Framing:								6.68
Bottom Deck Framing								
Deck Plate								
	2	1	490	8	8.1	0.25	660.11	
less conn		-16	490	0.5	0.3	0.25	-26.95	
	7	1	490	8.0	34.2	0.25	2792.18	
Weight								3.43
L2.5x2x3/1	4	3	2.75	10.58	1	1	87.29	
	5	3	2.75	18.79	1	1	155.02	
	8	3	2.75	34.69	1	1	286.19	
	9	3	2.75	7.59	1	1	62.62	
Weight								0.59
Total Weight for Bottom Deck Framing:								4.02

By: SSM Date: 5/20/97 Job No. 23423
Project: ACB Lighter Test Bed Calc No. 9.2
Subject: Weight Estimate

		Weight of Middle Pontoon (Continued)						
Description		Number	Unit Wt	Length/ Area	Length/ Area	Thickness	Weight	Total Weight
			(Lb/Ft) or (Lb/cuFt)	Ft or SqFt	Ft or SqFt	Inches	Lbs	Kips
Section A								
Plate	1	1	490	40.00	7.79	0.19	2386.30	
less plate		-1	490	14.05	1	0.19	-107.57	
less conn		-4	490	2.17	1.83	0.19	-121.45	
less conn		-8	490	1.00	1.17	0.19	-71.48	
add shear		4	490	2.17	1.83	1.25	809.65	
add conn		8	490	1.00	1.17	1.00	381.22	
misc conn		8	0.05				0.41	
misc conn		6	0.01				0.06	
misc conn		2	0.03				0.05	
L2.5x2x3/16	2	5	2.75	10.00	1	1	137.50	
L2.5x2x3/16	3	4	2.75	18.79	1	1	206.69	
	7	1	2.75	6.00	1	1	16.50	
	8	1	2.75	9.17	1	1	25.21	
	9	1	2.75	7.23	1	1	19.88	
Weight								3.68
Section B								
Weight								3.68
Total Weight for Sections A and B:								7.37

By: SSM Date: 5/20/97 Job No. 23423
Project: ACB Lighter Test Bed Calc No. 9.2
Subject: Weight Estimate

		Weight of Middle Pontoon (Continued)						
Description		Number	Unit Wt	Length/ Area	Length/ Area	Thickness	Weight	Total Weight
			(Lb/Ft) or (Lb/cuFt)	Ft or SqFt	Ft or SqFt	Inches	Lbs	Kips
Frame 1								
	3	6	490	0.25	1.29	0.25	19.75	
WT5x6	16	1	6	7.55			45.30	
	22	3	490	0.25	0.50	0.25	3.83	
	23	1	490	2.50	7.97	0.19	152.55	
	27	2	490	0.67	0.79	0.25	10.81	
Total for Frame 1:								0.23
Frame 2								
	6	4	490	0.25	0.85	0.25	8.68	
	7	1	490	1.25	7.89	0.25	100.68	
	8	1	490	0.50	7.89	0.50	80.54	
WT5x6	10	1	6	7.89			47.3	
	11	4	490	0.16	0.42	0.25	2.72	
WT6x7	21	2	7	5.42			75.88	
Total for Frame 2:								0.32
Frame 6/7/11		(Use same as Center Test Bed)						
		4	490	0.25	0.85	0.25	8.68	
Plate		1	490	1.25	7.89	0.25	100.68	
		1	490	0.50	7.89	0.50	80.54	
WT5X6		2	6	6.08			73.00	
WT5X6		1	6	7.89			47.34	
		4	490	0.16	0.42	0.25	2.68	
L2.5X2X3/16		4	2.75	1.75	1	1	19.25	
L2.5X2X3/16		2	2.75	2.33	1	1	12.82	
L2.5X2X3/16		2	2.75	1.92	1	1	10.56	
Grating		1		2.17	3.00	1.0		
Total for Frame 6:								0.36
Total for Frame 7:								0.31
Total for Frame 11:								0.31

By: SSM Date: 5/20/97 Job No. 23423
Project: ACB Lighter Test Bed Calc No. 9.2
Subject: Weight Estimate

		Weight of Middle Pontoon (Continued)						
Description		Number	Unit Wt	Length/ Area	Length/ Area	Thickness	Weight	Total Weight
			(Lb/Ft) or (Lb/cuFt)	Ft or SqFt	Ft or SqFt	Inches	Lbs	Kips
Frame 3/5/8/10		(Use same as Center Test Bed)						
Plate		1	490	1.25	7.89	0.25	100.68	
		1	490	0.50	7.89	0.50	80.54	
WT5X6		2	6	6.08			73.00	
WT5X6		1	6	7.89			47.34	
Total for Frame 3								0.30
Total for Frame 5								0.30
Total for Frame 8								0.30
Total for Frame 10								0.30
Frame 4/9		(Use same as Center Test Bed)						
Plate		1	490.0	7.79	8.00	0.19	477.14	
WT 5x6		4	6	7.55			181.20	
Total for Frame 4								0.66
Total for Frame 9								0.66
Frame 12		(Use same as Center Test Bed)						
Plate		1	490	7.79	8.00	0.19	477.14	
WT5X6		1	6	6.96			41.76	
		6	490	0.3	1.29	0.25	19.75	
		3	490	0.25	0.78	0.25	5.97	
WT5X6		3	6	0.75			13.50	
		3	6	5.68			102.24	
Total for Frame 12								0.66
						Frames total		4.71

By: SSM Date: 5/20/97 Job No. 23423
Project: ACB Lighter Test Bed Calc No. 9.2
Subject: Weight Estimate

			WEIGHT OF R2 SIDE PONTOON					
Description		Number	Unit Wt	Length/ Area	Length/ Area	Thickness	Weight	Total Weight
			(Lb/Ft) or (Lb/cuFt)	Ft or SqFt	Ft or SqFt	Inches	Lbs	Kips
Top Deck Framing		Dwg 71						
deck plate								
	2	2	490	2.00	2.9167	0.5	238.20	
less plate	2A	-1	490	1.25	1.0	0.5	-25.52	
less plate	2B	-1	490	0.708	0.708	0.5	-10.24	
	3	2	490	5.0	2.9167	0.25	297.75	
	3	1	490	10.917	8.0	0.25	891.53	
less plate	3A	-1	490	3.83	3	0.25	-117.29	
	21	1	490	3.83	3	0.5	234.59	
Adjustment between FR6 and FR7								
add Pl		**1**	**490**	**4.167**	**8.0**	**0.25**	**340.31**	
less Pl		**-1**	**490**	**4.000**	**5.7**	**0.25**	**-231.53**	
add Pl		**1**	**490**	**4.000**	**5.7**	**0.75**	**698.25**	
	33	1	490	13.920	8.0	0.25	1136.80	
less plate	33A	-1	490	3.96	4	0.25	-161.70	
less plate	33B	-1	490	10.75	1.21	0.25	-132.78	
	28	1	490	3.96	4	0.25	161.70	
	5	1	490	4.0	8.0	0.75	980.00	
less plate	5A	-1	490	2.33	1.0	0.75	-71.36	
less plate	5B	-1	490	1.25	1.2	0.75	-46.32	
less plate	5C	-1	490	0.708	0.708	0.75	-15.36	
less hawes	3C	-2	490	1.6	1.0	0.25	-32.87	
less conn	3D	-8	490	0.5	0.3	0.25	-13.60	
Weight								4.12
PL	27	14	490.0	0.5	1.77	0.5	252.96	
	32	16	490.0	0.5	1.83	0.3	149.45	
L6x4x3/8	6	3	12.3	3.45	1	1	127.31	
	7	1	12.3	2.45	1	1	30.14	
	8	2	12.3	2.76	1	1	67.90	
	9	12	12.3	3.58	1	1	528.41	
	12	10	12.3	4.15	1	1	510.45	
	13	1	12.3	2.47	1	1	30.38	
	15	1	12.3	1.92	1	1	23.62	
	20	9	12.3	3.48	1	1	385.24	
	23	14	12.3	3.89	1	1	669.86	
	23	2	12.3	0.83	1	1	20.42	
	25	1	12.3	2.083	1	1	25.62	
	30	6	12.3	1.083	1	1	79.93	
	33	2	12.3	2.67	1	1	65.68	
	34	1	12.3	1.6	1	1	19.68	
Weight								2.99
Total Weight for Top Deck Framing:								7.11

By: SSM Date: 5/20/97 Job No. 23423
Project: ACB Lighter Test Bed Calc No. 9.2
Subject: Weight Estimate

			WEIGHT OF R2 SIDE PONTOON					
Description		Number	Unit Wt	Length/ Area	Length/ Area	Thickness	Weight	Total Weight
			(Lb/Ft) or (Lb/cuFt)	Ft or SqFt	Ft or SqFt	Inches	Lbs	Kips
Bottom Deck Framing			Dwg 72					
Deck Plate								
	2	1	490	2.0	8	0.38	245.00	
less plate	2A	-2	490	1	1.25	0.38	-38.28	
less plate	2B	-2	490	0.75	1.00	0.38	-22.97	
less holes	2C	-3	490	0.35	1	0.38	-16.08	
	3	1	490	9.6	8.0	0.31	978.98	
	4	1	490	8.17	8.0	0.31	834.02	
	5	1	490	2.50	4.0	0.50	204.17	
	16	1	490	8	22.58	0.31	2305.04	
less pl	16A	-1	490	2.5	4	0.31	-127.60	
less conn		-8	490	0.5	0.3	0.31	-16.84	
Weight								4.35
L2.5x2x3/16	6	2	2.75	3.58	1	1	19.69	
	10	2	2.75	9.55	1	1	52.53	
	11	4	2.75	18.89	1	1	207.79	
	12	4	2.75	5.29	1	1	58.19	
	14	2	2.75	6.26	1	1	34.43	
	15	2	2.75	7.54	1	1	41.47	
Weight								0.41
Total Weight for Bottom Deck Framing:								4.76

By: SSM Date: 5/20/97 Job No. 23423
Project: ACB Lighter Test Bed Calc No. 9.2
Subject: Weight Estimate

		Weight of R2 Side Pontoon (Continued)						
Description		Number	Unit Wt	Length/ Area	Length/ Area	Thickness	Weight	Total Weight
			(Lb/Ft) or (Lb/cuFt)	Ft or SqFt	Ft or SqFt	Inches	Lbs	Kips
	Dwg 73							
Section B								
Plate	1	1	490	38.00	7.79	0.19	2266.99	
less plate		-1	490	9.40	1	0.19	-71.97	
less shear		-4	490	2.17	1.83	0.19	-121.45	
less conn		-8	490	1.00	1.17	0.19	-71.48	
add shear		4	490	2.17	1.83	1.25	809.65	
add conn		8	490	1.00	1.17	1.00	381.22	
misc conn		4	0.05				0.20	
misc conn		3	0.01				0.03	
misc conn		1	0.03				0.03	
Weight								3.19
L2.5x2x3/16	2	8	2.75	9.55	1.00	1.00	210.10	
	3	2	2.75	5.71	1.00	1.00	31.41	
	4	2	2.75	3.35	1.00	1.00	18.43	
	5	1	2.75	9.90	1.00	1.00	27.23	
	6	1	2.75	3.91	1.00	1.00	10.[illegible]5	
	[illegible]	3	2.75	18.79	1.00	1.00	155.[illegible]2	
	11	1	2.75	3.82	1.00	1.00	10.51	
	24	2	2.75	7.25	1	1	39.88	
Weight								0.50
Section A								
Plate	9	1	490	38.58	7.79	0.19	2301.00	
less plate		-1	490	3.00	7.80	0.19	-179.09	
less plate		-1	490	10.58	1	0.19	-81.00	
Pl	19	1	490	3.00	3.63	0.50	222.34	
Pl	25	4	490	0.21	0.21	0.50	3.60	
Pl	26	1	490	3.00	4.17	1.00	510.46	
Pl	27	1	490	1.00	1.17	1.50	71.48	
less ladder		-7	490	0.44	1	0.19	-23.58	
less moor		-2	490	1.17	0.67	0.19	-11.97	
Weight								2.81
L2.5x2x3/16	7	1	2.75	6.00	1.00	1.00	16.50	
	12	4	2.75	2.75	1	1	30.25	
	14	1	2.75	9.88	1	1	27.17	
	15	3	2.75	2.24	1	1	18.48	
	16	1	2.75	6.54	1	1	17.99	
	17	3	2.75	6.00	1	1	49.50	
	18	3	2.75	8.67	1	1	71.53	
	20	1	2.75	3.59	1	1	9.87	

		Weight of R2 Side Pontoon (Continued)						
Description		Number	Unit Wt	Length/ Area	Length/ Area	Thickness	Weight	Total Weight
			(Lb/Ft) or (Lb/cuFt)	Ft or SqFt	Ft or SqFt	Inches	Lbs	Kips
Section A (cont)								
	21	1	2.75	1.33	1	1	3.67	
	22	1	2.75	9.25	1	1	25.44	
	23	1	2.75	2.08	1	1	5.73	
	24	2	2.75	7.25	1	1	39.88	
L 6X4X3/8								
	13	2	12.3	3.49	1.00	1.00	85.85	
Weight								0.40
Total Weight for Sections A and B:								6.91
	Dwg 74							
Frame 1	(Used weight from R1 Side)							
Plate	1	1	490	2.50	6.00	0.50	306.25	
less open	1A	-1	490	1.54	1.54	0.50	-48.42	
L2.5x2x3/16	2	1	2.75	0.54	1.00	1.00	1.49	
	3	1	2.75	1.42	1.00	1.00	3.91	
Pl	4	3	490	0.25	1.29	0.25	9.88	
	23	1	490	0.25	1.79	0.25	54.82	
	55	1	2.75	1.94	1.00	1.00	5.34	
Total for Frame 1:								0.33
Frame 2	(Used weight from R1 Side)							
L4x3x1/4	5	2	6.2	3.00	1.00	1.00	37.20	
Plate	6	1	490	1.25	4.00	0.25	51.04	
	7	2	490	0.25	1.00	0.25	5.10	
WT6x7	9	1	7	8.00	1.00	1.00	56.00	
	10	4	490	0.16	0.42	0.25	2.66	
	11	1	490	3.96	5.47	0.25	221.12	
minus mooring		-1	490	1.00	1.00	0.25	-10.21	
	12	1	490	0.50	4.00	0.50	40.83	
	13	1	490	0.50	5.00	0.25	25.52	
L2.5x2x3/16	19	1	2.75	3.75	1.00	1.00	10.31	
WT6x7	56	1	7.0	4.19	1.00	1.00	29.33	
Total for Frame 2:								0.47

By: SSM Date: 5/20/97 Job No. 23423
Project: ACB Lighter Test Bed Calc No. 9.2
Subject: Weight Estimate

		Weight of R2 Side Pontoon (Continued)						
Description		Number	Unit Wt	Length/ Area	Length/ Area	Thickness	Weight	Total Weight
			(Lb/Ft) or (Lb/cuFt)	Ft or SqFt	Ft or SqFt	Inches	Lbs	Kips
Frame 3	(Used weight from R1 Side)							
Plate	6	1	490	1.25	4.00	0.25	51.04	
	7	2	490	0.25	1.00	0.25	5.10	
WT6x7	8	1	7	6.00	1.00	1.00	42.00	
	10	2	490	0.16	0.42	0.25	1.33	
	12	1	490	0.50	4.00	0.50	40.83	
	17	1	490	0.16	1.44	0.25	2.29	
	18	1	490	0.16	1.00	0.25	1.59	
L2.5x2x3/16	19	2	2.75	3.75	1.00	1.00	20.63	
WT6x7	21	1	7	7.57	1.00	1.00	52.99	
	22	1	490	0.50	6.80	0.25	34.71	
	28	1	490	4.00	7.30	0.19	223.56	
Total for Frame 3								0.48
Frame 4	(Used weight from R1 Side)							
WT5x6	24	3	6	0.55	1.00	1.00	9.90	
WT5x6	25	1	6	4.81	1.00	1.00	28.86	
WT5x6	26	1	6	1.44	1.00	1.00	8.64	
pl	27	1	490	7.79	7.97	0.19	475.35	
open		-1	490	1.83	1.21	0.19	-16.95	
Total for Frame 4								0.51
Frame 5&8		(Used weight from R1 Side)						
	7	2	490	0.25	1.00	0.25	5.10	
WT6x7	8	2	7	6.00	1.00	1.00	84.00	
	10	2	490	0.16	0.42	0.25	1.33	
	14	1	490	0.50	7.97	0.50	81.36	
	15	1	490	1.25	7.97	0.25	101.70	
WT 6x7	21	1	7	7.57	1.00	1.00	52.99	
Total for Frame 5								0.32
Total for Frame 8								0.32

		Weight of R2 Side Pontoon (Continued)						
Description		Number	Unit Wt	Length/ Area	Length/ Area	Thickness	Weight	Total Weight
			(Lb/Ft) or (Lb/cuFt)	Ft or SqFt	Ft or SqFt	Inches	Lbs	Kips
Frame 6/7								
Plate	7	2	490	0.25	1.00	0.25	5.10	
WT6x7	8	1	7	6.00	1.00	1.00	42.00	
	10	2	490	0.16	0.58	1.00	7.58	
	33	1	490	0.50	7.00	0.50	71.46	
	34	1	490	1.25	7.00	0.25	89.32	
WT6x7	35	1	7	7.00	1.00	1.00	49.00	
	36	1	490	0.67	6.00	0.25	41.04	
	37	1	490	0.33	6.00	0.38	30.32	
	38	1	490	0.33	1.70	0.38	8.59	
	39	1	490	0.17	0.75	0.25	1.28	
	40	1	490	0.33	0.94	0.38	4.75	
	41	1	490	0.96	1.79	0.25	17.54	
	42	1	490	0.92	2.00	0.25	18.78	
Total for Frame 6								0.39
Total for Frame 7								0.39
	Dwg 55							
Frame 9	(Used weight from R1 Side)							
Plate	25	1	490	8.00	8.00	0.19	490.00	
WT 5x6	30/32/33	1	6	29.41	1.00	1.00	176.46	
less hawes		-1	490	1.07	1.00	1.00	-43.69	
Total for Frame 9								0.62
Frame 10	(Used weight from R1 Side)							
Plate	25	1	490	7.79	8.00	0.19	477.14	
	26	4	490	0.50	2.92	0.50	119.23	
	27	6	490	0.25	1.29	0.25	19.75	
	28	2	490	0.16	24.00	0.25	76.44	
	34	2	490	0.25	2.17	0.50	22.12	
less open		-2	490	2.42	4.00	0.19	-148.23	
WT6X7	24	2	7	4.00	1.00	1.00	56.00	
L4X3X1/4	29	1	6.2	2.67	1.00	1.00	16.55	
Total for Frame 10								0.64

By: SSM Date: 5/20/97 Job No. 23423
Project: ACB Lighter Test Bed Calc No. 9.2
Subject: Weight Estimate

		Weight of R2 Side Pontoon (Continued)						
Description		Number	Unit Wt	Length/ Area	Length/ Area	Thickness	Weight	Total Weight
			(Lb/Ft) or (Lb/cuFt)	Ft or SqFt	Ft or SqFt	Inches	Lbs	Kips
Frame 11	(Used weight from R1 Side)							
Plate	13	1	490	2.90	7.79	0.19	173.01	
	15	1	490	1.25	2.85	0.25	36.42	
less moor		-1	490	1.00	1.00	0.19	-7.66	
less access	13A	-1	490	1.33	2.00	0.19	-20.37	
less pipe		-1	490	1.04	1.00	0.19	-7.96	
Pl	16	2	490	0.25	0.85	0.25	4.34	
	17	1	490	0.50	2.85	0.50	29.09	
	23	12	490	0.16	0.42	0.25	7.97	
L2.5X2X3/16	14	2	2.75	1.19	1.00	1.00	6.53	
WT6X7	18	1	7	0.52	1.00	1.00	3.64	
	19	1	7	3.94	1.00	1.00	27.58	
	20	1	7	1.44	1.00	1.00	10.08	
	21	1	7	2.85	1.00	1.00	19.95	
	22	1	7	7.79	1.00	1.00	54.53	
Total for Frame 11:								0.34
Frame 12	(Used weight from R1 Side)							
Plate	1	1	490	6.04	7.79	0.50	161.15	
less R1	1A	-1	490	2.17	7.00	0.50	-309.66	
less hawes	1B	-1	490	1.77	1.00	0.50	-36.14	
	3	2	490	0.25	0.43	0.25	2.18	
	4	4	490	0.21	0.21	0.50	3.53	
L2.5x2x3/16	2	2	2.75	1.08	1.00	1.00	5.96	
	6	2	2.75	0.50	1.00	1.00	2.75	
	7	1	2.75	1.17	1.00	1.00	3.21	
	10	1	2.75	1.96	1.00	1.00	5.38	
	11	1	2.75	2.17	1.00	1.00	5.96	
	12	1	2.75	1.43	1.00	1.00	3.92	
Total for Frame 12:								0.65
						Frame total=		5.45

Weight of R2 Side Pontoon (Continued)

Description		Number	Unit Wt (Lb/Ft) or (Lb/cuFt)	Length/ Area Ft or SqFt	Length/ Area Ft or SqFt	Thickness Inches	Weight Lbs	Total Weight Kips
	Dwg 75							
Sect C	(Used same weight as R1)							
bar	34	8	490	0.17	0.17	2.00	18.22	
	36	4	490	0.56	0.83	1.25	94.90	
Sect D	(Used same weight as R1)							
	37	4	490	0.56	1.42	1.25	163.22	
Sect G	(Used same weight as R1)							
	38	2	490	0.88	0.88	0.25	15.81	
	39	1	490	1.10	7.97	0.25	89.50	
	40	1	490	0.50	7.97	0.25	40.68	
	Dwg 76							
Sect H								
	40	1	490	2.83	3.79	0.50	218.98	
	41	1	490	2.83	4.00	1.00	462.23	
Sect J	(Used same weight as R1)							
	28	1	490	1.00	7.75	0.50	158.23	
L2.5X2X3/16	29	3	2.75	1.00	1.00	1.00	8.25	
L2.5X2X3/16	45	2	2.75	0.50	1.00	1.00	2.75	
Sect K	(Used same weight as R1)							
	30	1	490	1.25	7.75	0.50	197.79	
L2.5X2X3/16	31	3	2.75	1.42	1.00	1.00	11.72	
L2.5X2X3/16	32	1	2.75	0.96	1.00	1.00	2.64	
	33	1	490	1.00	0.58	1.00	23.68	
	34	1	490	0.25	1.25	0.25	3.19	
	35	2	490	5.00	0.42	0.38	64.31	
	39	1	490	0.71	1.00	1.00	28.99	

By: SSM Date: 5/20/97 Job No. 23423
Project: ACB Lighter Test Bed Calc No. 9.2
Subject: Weight Estimate

		Weight of R2 Side Pontoon (Continued)						
Description		Number	Unit Wt (Lb/Ft) or (Lb/cuFt)	Length/ Area Ft or SqFt	Length/ Area Ft or SqFt	Thickness Inches	Weight Lbs	Total Weight Kips
Sect L	(Used same weight as R1)							
	13	2	490	2.83	7.35	0.50	849.35	
	14	2	490	3	7.35	0.25	450.19	
	6	2	490	0.125	0.58	0.50	2.96	
	7	2	490	0.33	0.58	0.50	7.82	
	8	2	490	0.33	5.83	0.50	78.56	
	9	2	490	0.125	5.83	0.50	29.7[illegible]	
	10	2	490	0.58	2.67	0.50	63.23	
	11	4	490	0.58	1.33	2.50	314.99	
	12	2	490	0.58	1.33	0.50	31.50	
	15	12	490	0.5	1.44	0.25	88.20	
	16	4	490	0.33	6.75	0.75	272.87	
	17	2	490	0.58	2.67	0.25	31.62	
	18	2	490	0.58	1.125	0.25	13.32	
	19	4	490	0.58	1.33	1.00	126.00	
	21	2	490	0.58	1.33	0.25	15.75	
	22	4	490	0.125	1.33	0.[illegible]	[illegible]3.58	
	23	4	490	0.125	2.67	0.[illegible]	27.26	
	24	4	490	0.125	0.79	0.[illegible]0	8.06	
	25	2	490	0.58	0.75	0.50	17.76	
	26	4	490	0.67	1.33	2.50	363.87	
	44	4	490	0.83	6.75	0.38	343.15	
L4X3X1/4	20	2	5.8	6.75			78.3[illegible]	
Sect M/N	(Used same weight as R1)							
	36	2	490	0.71	7.79	0.50	225.85	
L2.5X2X3/16	37	6	2.75	0.71	1	1.00	11.72	
L2.5X2X3/16	38	2	2.75	0.38	1	1.00	2.09	
Plan								
	1	1	490	2.21	2.79	1.00	251.77	
	2	4	490	0.41	1.54	0.50	51.56	
	3	1	490	1.21	1.23	0.50	30.39	
	4	1	490	0.65	1.21	0.50	16.06	
	5	2	490	1.23	1.85	0.50	92.92	
	6	2	490	0.19	0.67	0.50	5.20	
	7	2	490	1.08	1.85	0.25	40.79	
	8	2	490	0.67	1.67	1.50	137.07	
	9	1	490	0.88	1.21	0.50	21.74	
	10	2	490	0.88	1.23	0.5	44.20	
	11	2	490	0.19	10	0.5	77.58	

By: SSM
Project: ACB Lighter Test Bed
Subject: Weight Estimate

Date: 5/20/97

Job No. 23423
Calc No. 9.2

		Weight of R2 Side Pontoon (Continued)						
Description		Number	Unit Wt	Length/ Area	Length/ Area	Thickness	Weight	Total Weight
			(Lb/Ft) or (Lb/cuFt)	Ft or SqFt	Ft or SqFt	Inches	Lbs	Kips
Plan (cont)								
	12	2	490	0.125	10	0.5	51.04	
	13	2	490	1.85	12	0.5	906.50	
	14	2	490	0.25	0.54	0.25	2.76	
	15	1	490	0.46	0.5	0.25	2.35	
	16	1	9.5	1.21			11.495	
	17	2	9.5	2			38	
	18	1	490	1	3.5	0.5	71.46	
	19	1	490	1.25	3.5	0.5	89.32	
L2.5x2x3/16	20	1	2.75	1.24			3:41	
L2.5x2x3/16	21	1	2.75	0.96			2.64	
	22	1	490	0.25	1.35	0.25	3.45	
L2.5x2x3/16	23	2	2.75	0.69			3.795	
	24	2	490	0.71	3.21	0.5	93.06	
	25	1	490	0.58	1	1	23.68	
	27	1	490	0.71	1	1	28.99	
	28	4	490	0.083	1.9	0.5	12.88	
	29	1	490	0.52	1.21	0.5	12.85	
	30	2	490	0.88	0.96	0.5	34.50	
	31	1	490	1.88	14.31	0.5	549.27	
					Detail total		7783.54	7.78

By: SSM Date: 5/20/97 Job No. 23423
Project: ACB Lighter Test Bed Calc. No. 9.2
Subject: Weight Estimate

			F1 CONNECTOR					
Describtion		Number	Unit Wt	Length/ Area	Length/ Area	Thickness	Weight	Total Weight
			(Lb/Ft) or (Lb/cuFt)	Ft or SqFt	Ft or SqFt	inches	Lbs	Kips
Docking Connector								
	Flange Plate	2	490	2.1667	1.1667	1	206.44	
	Web Plate	2	490	3.9200	1	0.75	240.10	
	Cheek Plate	2	490	0.83	0.83	0.5	28.13	
	OD 4.5	1	27.5	0.5	1	1	13.75	
	Stiffeners	7	490	0.52	0.25	0.625	23.22	
	Outboard Face	1	490	1.1667	1	0.75	35.73	
	OD 5	2	56.1	0.25	1	1	28.05	
	Vert Bars	2	490	0.375	1	1.5	45.94	
	Vert Bars	2	490	0.33	1	1.125	30.32	
	Vert Bars	2	490	0.656	1	1	53.57	
	Inboard Face	1	490	1	1.04	0.5	21.23	
	End Pipe	1	28.5	0.33	1	1	9.41	
	PIN	1	490	0.0491	1.25	1	30.07	
Fixed Connector								
	Flange Plate	2	490	2.1667	1.1667	1	206.44	
	Web Plate	2	490	2.9500	1	0.75	180.69	
	Cheek Plate	2	490	0.83	0.95	0.5	32.20	
	Outboard Face	1	490	1	1.16	0.75	85.53	
	Vert Bars	2	490	0.375	1	1.5	45.94	
	Vert Bars	2	490	0.32	1	1.5	39.20	
	Inboard Face	2	490	0.48	0.67	0.5	13.13	
	Fender	1	69	4.75	1	1	327.75	
	Chain	1	10	5	1	1	50.00	
	Total:							1.70

By: SSM Date: 5/20/97 Job No. 23423
Project: ACB Lighter Test Bed Calc. No. 9.2
Subject: Weight Estimate

			R1 CONNECTOR					
Description		Number	Unit Wt	Length/ Area	Length/ Area	Thickness	Weight	Total Weight
			(Lb/Ft) or (Lb/cuFt)	Ft or SqFt	Ft or SqFt	Inches	Lbs	Kips
FRAME								
3.5x2.5x.25 TS		1	8.81	25	1	1	220.25	
3.5x2.5x.25 TS		1	8.81	9	1	1	79.29	
3.5x2.5x.25 TS		1	8.81	10.79	1	1	95.06	
3.5x2.5x.25 TS		1	8.81	25.33	1	1	223.16	
3.5x2.5x.25 TS		2	8.81	4.5	1	1	79.29	
3.5x2.5x.25 TS		2	8.81	3.33	1	1	58.67	
3.5x2.5x.25 TS		2	8.81	4.67	1	1	82.29	
5.0x2.0x.25 TS		2	10.51	2.25	1	1	47.30	
Bent Plate		2	490	6.33	0.48	0.25	62.03	
Bent Plate		2	490	6.33	0.33	0.25	43.07	
Pl		4	490	0.58	1.17	1.5	165.83	
		2	490	0.92	2.13	0.5	80.02	
		2	490	0.33	0.50	0.375	5.05	
		2	490	0.25	1.54	0.75	23.58	
		2	490	0.33	1.71	0.375	17.28	
		1	490	0.5	1.71	0.25	8.73	
		4	490	0.92	1.17	1	175.81	
Tube 18"		1	490	4.25	0.92	0.875	139.25	
Tube 17.75"		1	490	4.12	0.92	1	154.27	
Total:								1.76
BEARING BLOCK								
Plate		1	490	0.92	2.5	1	94	
Plate		4	490	0.31	0.92	0.5	23	
Plate		4	490	0.58	1.167	1.5	166	
Plate		2	490	2.125	6.33	1.5	1648	
Plate		1	490	2.11	1	0.375	32	
Plate		2	490	0.21	1.54	0.75	20	
L4x3x3/8		4	8.5	2.25			77	
L4x3x3/8		2	8.5	2.67			45	
L4x3x3/8		2	8.5	1.83			31	
L8x8x1/2		1	26.4	1.79			47	
Total								2.18
PIN ASSEMBLY								
Tube:								
OD16.25		1	490	3.35	2.65	1.75	634	
OD17.5		1	490	4.19	0.5	0.75	64	
OD18.25		1	490	4.65	2.81	0.25	133	
OD11.75		1	490	2.88	0.458	0.375	20	
OD 2.25		1	490	0.123	5.083	0.375	10	
OD 12		1	490	0.721	0.292	0.25	2	
OD 12.625		1	490	0.802	0.083	0.25	1	
Plate:								
Dia 18.25		1	490	1.817	1	1	74	
Dia 15		1	490	1.227	1	0.75	38	
Dia 12.75		1	490	0.894	1	0.5	18	

By: SSM Date: 5/20/97 Job No. 23423
Project: ACB Lighter Test Bed Calc. No. 9.2
Subject: Weight Estimate

			R1 CONNECTOR (cont)				
Description	Number	Unit Wt	Length/ Area	Length/ Area	Thickness	Weight	Total Weight
		(Lb/Ft) or (Lb/cuFt)	Ft or SqFt	Ft or SqFt	Inches	Lbs	Kips
Dia 16.25	1	490	1.44	1	9	529	
Dia 6	1	490	0.2	1	0.75	6	
Dia 12.75	1	490	0.89	1	1	36	
Dia 8	1	490	0.35	1	0.5	7	
	8	490	0.25	0.58	0.5	24	
	1	490	0.0313	2.75	0.75	3	
Screws/Washer/Nuts							
Total:							1.60
LEVER AND ROLLER ASSEMBLY							
	2	490	0.208	4.95	0.75	63	
	2	490	0.167	0.458	0.75	5	
	8	490	0.007	1	9.5	22	
DIA 1	1	490	0.005	1.33		3	
DIA 1	1	490	0.005	1.79		4	
DIA 5/8	1	490	0.002	0.92		1	
pipe	2	3		7		42	
pipe	2	1.68		0.208		1	
MISC						1	
Total:							0.14
GIULLOTINE							
Outboard mating guillotine						130	
Inboard mating guillotine						115	
Reaction guillotine						150	
Total:							0.40
TOTAL FOR R1 CONNECTOR:							6.08
TOTAL FOR 3 CONNECTORS:							18.24

By: SSM Date: 5/20/97 Job No. 23423
Project: ACB Lighter Test Bed Calc. No. 9.2
Subject: Weight Estimate

			R2 CONNECTOR					
Description		Number	Unit Wt	Length/ Area	Length/ Area	Thickness	Weight	Total Weight
			(Lb/Ft) or (Lb/cuFt)	Ft or SqFt	Ft or SqFt	Inches	Lbs	Kips
Lower Pin Assembly								
	Lower pin assembly						1140	
	Rubber alignment pin assembly						200	
Total:								1.34
Upper Pin Assembly:								
Plate:	3	1	490	0.25	0.25	0.25	0.64	
	4	1	490	0.5	0.67	3.25	44.46	
		1	490	0.17	0.67	1.5	6.98	
		1	490	0.25	0.67	1.5	10.26	
		1	490	0.25	0.67	1	6.84	
		-1	490	0.022	1	0.792	-8.54	
	5	1	490	0.5	0.67	3.25	44.46	
		1	490	0.17	0.67	1.5	6.98	
		1	490	0.25	0.67	1.5	10.26	
		1	490	0.25	0.67	1	6.84	
	6	2	490	0.58	1.58	0.5	37.42	
	7	2	490	0.5	1.58	0.5	32.26	
	8	2	490	0.042	1.75	0.5	3.00	
	9	8	490	0.042	0.167	0.5	1.15	
	10	1	490	0.188	0.33	0.125	0.32	
Total:								0.20
Guillotine:								
Upper Plates		1					40.00	
Lower Plates		1					185.00	
Release Mechanism								
Frame Assembly		Dwg 173						
	4	1	490	0.85	1.167	0.375	15.19	
	5	4	490	0.25	0.24	0.375	3.68	

By: SSM Date: 5/20/97 Job No. 23423
Project: ACB Lighter Test Bed Calc. No. 9.2
Subject: Weight Estimate

			R2 CONNECTOR (cont)					
Description		Number	Unit Wt	Length/ Area	Length/ Area	Thickness	Weight	Total Weight
			(Lb/Ft) or (Lb/cuFt)	Ft or SqFt	Ft or SqFt	Inches	Lbs	Kips
TS2x2x1/4	6	2	5.41			2.5	27.05	
	7	2	490	0.104	2.5	0.25	5.31	
	8	1	490	0.083	0.229	1	0.78	
	9	6	490	0.083	0.146	0.5	1.48	
	10	9	490	0.083	0.229	0.5	3.49	
handle	11		490	0.247		1.5	15.13	
	12	1	490	0.083	0.083	0.5	0.14	
Tie-down Bar		2	490	0.25	0.125	1	2.55	
Pawl Assembly								
C3x6	13	1	6	0.27			1.62	
misc							5.00	
Release bar assembly								
Bar		1	490	0.167	0.83	1	5.66	
misc							5.00	
Total:								0.23
TOTAL FOR R2 CONNECTOR:								1.77
TOTAL FOR 3 CONNECTORS:								5.30

9.3 Raked Test Bed No. 2 Weight Estimate

By: SSM
Project: ACB Lighter Test Bed
Subject: Weight Estimate

Date: 5/20/97

Job No. 23423
Calc No. 9.3

TRANSPORT WEIGHT ESTIMATE OF R1 SIDE PONTOON -- RAKED TEST BED #2								
					Weight Kips			
R1 Top Deck					7.07			
R1 Deck Closure					0.40			
F1 Cover Panels					0.48			
R1 Bottom Deck					4.47			
R1 Sides					6.25			
R1 Frames					9.44			
Details					5.00			
Misc	**(ladders, iso wp,mooring rings,conn)**				1.38		subtotal	34.50
R1 Transverse Hawsepipe					1.36			
R2 Longitudinal Hawsepipe					1.57			
R1 Connector					6.08		subtotal	43.51
F1 Connector					1.70			
Iso A&B					1.91			
Subtotal					47.12			
Mill Tolerance and Welds (5%)					2.36			
Miscellaneous Steel (5%)					2.36			
			Total		51.83			

By: SSM Date: 5/20/97 Job No. 23423
Project: ACB Lighter Test Bed Calc No. 9.3
Subject: Weight Estimate

TRANSPORT WEIGHT ESTIMATE OF MIDDLE PONTOON -- RAKED TEST BED #2

					Weight Kips			
Top Deck					6.68			
Bottom Deck					4.02			
Sides					7.37			
Frames					4.71			
Details					-			
Misc	**(ladder, iso wp, liftpts, conn)**				2.50		subtotal	25.28
Iso C					0.51			
Subtotal					25.78			
Mill Tolerance and Welds (5%)					1.29			
Miscellaneous Steel (5%)					1.29			
			Total		28.36			

By: SSM Date: 5/20/97 Job No. 23423
Project: ACB Lighter Test Bed Calc No. 9.3
Subject: Weight Estimate

TRANSPORT WEIGHT ESTIMATE OF R2 SIDE PONTOON -- RAKED TEST BED #2

	Weight Kips		
R2 Top Deck	7.61		
R1 Deck Closure	0.00		
F1 Cover Panels	0.48		
R2 Bottom Deck	4.75		
R2 Sides	6.14		
R2 Frames	6.88		
Details	4.72		
Misc	1.30	subtotal	31.87
R2 Transverse Hawsepipe	1.91		
R2 Longitudinal Hawsepipe	1.57		
R2 Connector	1.77		
F1 Connector	1.70	subtotal	38.82
Iso A&B	1.91		
Subtotal	40.73		
Mill Tolerance and Welds (5%)	2.04		
Miscellaneous Steel (5%)	2.04		
Total	44.80		

By: SSM Date: 5/20/97 Job No. 23423
Project: ACB Lighter Test Bed Calc No. 9.3
Subject: Weight Estimate

TRANSPORT WEIGHT ESTIMATE OF THREE PONTOONS – RAKED TEST BED #2

		Weight Kips	
R1 Side Pontoon (w/o rem iso)		43.51	
Middle Pontoon(w/o rem iso)		25.28	
R2 Side Pontoon (w/o rem iso)		38.82	
Fenders		2.47	
	subtotal	110.07	
Mill Tolerance (5%)		5.50	
Miscellaneous Steel (5%)		5.50	
	total	121.08	kips
		54.05	LT

By: SSM Date: 5/20/97 Job No. 23423
Project: ACB Lighter Test Bed Calc No. 9.3
Subject: Weight Estimate

			WEIGHT OF R1 SIDE PONTOON					
Description		Number	Unit Wt	Length/ Area	Length/ Area	Thickness	Weight	Total Weight
			(Lb/Ft) or (Lb/cuFt)	Ft or SqFt	Ft or SqFt	Inches	Lbs	Kips
Top Deck Framing		Dwg 81	(Bold are changes made to RTB#1)					
deck plate								
	2	**1**	**490**	**2.00**	**8.00**	**0.5**	**326.67**	
less plate	2A	-1	490	1.25	1.0	0.5	-25.52	
less plate	2B	-1	490	0.708	0.708	0.5	-10.24	
	3	**1**	**490**	**8.0**	**15.92**	**0.25**	**1299.86**	
less plate	**3A**	**-1**	**490**	**3.42**	**3.83**	**0.25**	**-133.71**	
	21	**1**	**490**	**3.42**	**3.83**	**0.5**	**267.43**	
	4	1	490	4.1667	8.0	0.75	1020.84	
less plate	4A	-1	490	2.167	7.0	0.75	-464.49	
	20	1	490	13.92	8.0	0.25	1136.80	
less plate	**20A**	-1	490	3.96	4	0.25	-161.70	
less plate	**20B**	-1	490	10.75	1.21	0.25	-132.78	
	28	1	490	3.96	4	0.5	323.40	
	5	1	490	4.0	8.0	0.75	980.00	
less plate	5A	-1	490	2.33	1.21	0.75	-86.34	
less plate	5B	-1	490	1.25	1.0	0.75	-38.28	
less plate	5C	-1	490	0.708	0.708	0.75	-15.36	
less hawes	3C	-2	490	1.6	1.0	0.25	-32.87	
less conn	3D	-8	490	0.5	0.3	0.25	-13.60	
Weight								4.24
PL	**27**	**deleted**						
	32	16	490	0.5	1.83	0.3	149.45	
L6x4x3/8	**6**	**7**	**12.3**	**3.45**	**1**	**1**	**297.05**	
	7	**2**	**12.3**	**2.45**	**1**	**1**	**60.27**	
	8	**2**	**12.3**	**2.76**	**1**	**1**	**67.90**	
	9	**11**	**12.3**	**3.58**	**1**	**1**	**484.37**	
	12	**11**	**12.3**	**3.58**	**1**	**1**	**484.37**	
	13	**8**	**12.3**	**4.15**	**1**	**1**	**408.36**	
	15	**1**	**12.3**	**1.92**	**1**	**1**	**23.62**	
	16	**3**	**12.3**	**1.083**	**1**	**1**	**39.96**	
	20	**deleted**						
	23	**14**	**12.3**	**4.15**	**1**	**1**	**714.63**	
	24	1	12.3	1.24	1	1	15.25	
	25	1	12.3	2.083	1	1	25.62	
	29	**1**	**12.3**	**1.9**	**1**	**1**	**23.37**	
	30	1	12.3	3.167	1	1	38.95	
Weight								2.83
Total Weight for Top Deck Framing:								7.07

By: SSM Date: 5/20/97 Job No. 23423
Project: ACB Lighter Test Bed Calc No. 9.3
Subject: Weight Estimate

			WEIGHT OF R1 SIDE PONTOON					
Description		Number	Unit Wt	Length/ Area	Length/ Area	Thickness	Weight	Total Weight
			(Lb/Ft) or (Lb/cuFt)	Ft or SqFt	Ft or SqFt	Inches	Lbs	Kips
Bottom Deck Framing			Dwg 82					
Deck Plate								
	2	**1**	**490**	**2.0**	**8.0**	**0.38**	**245.00**	
less plate	2A	-2	490	1.0	1.25	0.38	-38.28	
less plate	2B	-2	490	0.75	1.00	0.38	-22.97	
less holes	2C	-4	490	0.35	1	0.38	-21.44	
	3	**1**	**490**	**8**	**8**	**0.31**	**816.67**	
	5	1	490	4.17	8.0	0.5	680.56	
	7	**1**	**490**	**5.50**	**8.0**	**0.31**	**61.46**	
	17	**1**	**490**	**10.4**	**8.0**	**0.25**	**850.97**	
	18	**1**	**490**	**12.1**	**8.0**	**0.25**	**988.17**	
less conn		-8	490	0.5	0.3	0.31	-16.84	
Weight								4.04
L2.5x2x3/16	**4**	**1**	**2.75**	**9.8**	**1**	**1**	**26.95**	
	6	**3**	**2.75**	**4.15**	**1**	**1**	**34.24**	
	8	**2**	**2.75**	**3.66**	**1**	**1**	**20.13**	
	9	**1**	**2.75**	**6.54**	**1**	**1**	**17.99**	
	10	**1**	**2.75**	**10**	**1**	**1**	**27.50**	
	11	**3**	**2.75**	**2.167**	**1**	**1**	**17.88**	
	12	**2**	**2.75**	**5.45**	**1**	**1**	**29.98**	
	13	**6**	**2.75**	**8.3**	**1**	**1**	**136.95**	
	14	**1**	**2.75**	**6.97**	**1**	**1**	**19.17**	
	15	**2**	**2.75**	**7.54**	**1**	**1**	**41.47**	
	19	**4**	**2.75**	**5.29**	**1**	**1**	**58.19**	
Weight								0.43
Total Weight for Bottom Deck Framing:								4.47

By: SSM Date: 5/20/97 Job No. 23423
Project: ACB Lighter Test Bed Calc No. 9.3
Subject: Weight Estimate

			WEIGHT OF R1 SIDE PONTOON					
Description		Number	Unit Wt	Length/ Area	Length/ Area	Thickness	Weight	Total Weight
			(Lb/Ft) or (Lb/cuFt)	Ft or SqFt	Ft or SqFt	Inches	Lbs	Kips
R1 Cover	Dwg 128 (same as for Center Test Bed #1)							
L4x4x1/4		9	6.6	2.33			138.40	
L4x4x1/4		2	6.6	7.00			92.40	
Pl 1/4		1	490	2.33	7.0	0.25	166.50	
								0.40
F1 Cover	Dwg 128							
Grating		1	34	11.00	1.2		450.32	
Pl		1	490	1.48	1.97	0.25	29.76	
								0.48

By: SSM Date: 5/20/97 Job No. 23423
Project: ACB Lighter Test Bed Calc No. 9.3
Subject: Weight Estimate

		Weight of R1 Side Pontoon (Continued)						
Description		Number	Unit Wt	Length/ Area	Length/ Area	Thickness	Weight	Total Weight
			(Lb/Ft) or (Lb/cuFt)	Ft or SqFt	Ft or SqFt	Inches	Lbs	Kips
	Dwg 83							
Section A								
Plate	1	1	490	38.00	7.79	0.19	2266.99	
less plate		-1	490	9.29	1	0.19	-71.13	
less shear		-4	490	2.17	1.83	0.19	-121.45	
less conn		-3	490	1.00	1.17	0.19	-71.48	
add shear		4	490	2.17	1.83	1.25	809.65	
add conn		8	490	1.00	1.17	1.00	381.22	
misc conn		4	0.05				0.20	
misc conn		3	0.01				0.03	
misc conn		1	0.03				0.03	
Weight								3.19
L2.5x2x3/16	2	4	2.75	9.55	1.00	1.00	105.05	
	3	1	2.75	5.71	1.00	1.00	15.70	
	4	2	2.75	3.35	1.00	1.00	18.43	
	5	3	2.75	18.79	1.00	1.00	155.02	
	6	1	2.75	3.91	1.00	1.00	10.75	
	8	1	2.75	9.90	1.00	1.00	27.23	
	9	1	2.75	6.10	1.00	1.00	16.78	
	11	1	2.75	3.82	1.00	1.00	10.51	
	12	1	2.75	5.43	1.00	1.00	14.93	
	13	1	2.75	7.23	1.00	1.00	19.88	
Weight								0.39
Section B								
Plate	15	1	490	38.58	7.79	0.19	2301.00	
less plate		-1	490	10.58	1	0.19	-81.00	
less ladder		-7	490	0.44	1	0.19	-23.58	
less moor		-2	490	1.17	0.67	0.19	-11.97	
less pipe		-1	490	1.07	1	0.19	-8.19	
Plate	29	1	490	0.21	0.21	0.50	0.90	
Weight								2.18
L2.5x2x3/16	14	4	2.75	2.63	1	1	28.93	
	17	5	2.75	9.72	1	1	133.65	
	18	3	2.75	2.23	1	1	18.40	
	19	1	2.75	1.30	1	1	3.58	
	20	1	2.75	6.43	1	1	17.68	
	21	3	2.75	5.34	1	1	44.06	
	22	1	2.75	5.00	1	1	13.75	
	23	3	2.75	8.27	1	1	68.23	

		Weight of R1 Side Pontoon (Continued)						
Description		Number	Unit Wt	Length/ Area	Length/ Area	Thickness	Weight	Total Weight
			(Lb/Ft) or (Lb/cuFt)	Ft or SqFt	Ft or SqFt	Inches	Lbs	Kips
Section B (cont)								
	24	1	2.75	1.57	1	1	4.32	
	25	1	2.75	6.11	1	1	16.80	
	26	1	2.75	7.28	1	1	20.02	
	27	1	2.75	9.25	1	1	25.44	
	28	1	2.75	2.08	1	1	5.73	
L 6X4X3/8								
	16	2	12.3	3.49	1.00	1.00	85.85	
Weight								0.49
Total Weight for Sections A and B:								6.25
	Dwg 85							
Frame 12	(Used same as RTB#1 frame 1)							
Plate		1	490	2.50	6.00	0.50	306.25	
less open		-1	490	1.54	1.54	0.50	-48.42	
L2.5x2x3/16		1	2.75	0.54	1.00	1.00	1.49	
		1	2.75	1.42	1.00	1.00	3.91	
		3	490	0.25	1.29	0.25	9.88	
		1	490	0.25	1.79	0.25	4.57	
		1	2.75	1.94	1.00	1.00	5.34	
Total for Frame 12:								0.28
Frame 11	(Used same as RTB#1 frame 2)							
L4x3x1/4		2	6.2	3.00	1.00	1.00	37.20	
Plate		1	490	1.25	4.00	0.25	51.04	
		2	490	0.25	1.00	0.25	5.10	
WT6x7		1	7	8.00	1.00	1.00	56.00	
		4	490	0.16	0.42	0.25	2.66	
		1	490	3.96	5.47	0.25	221.12	
minus mooring		-1	490	1.00	1.00	0.25	-10.21	
		1	490	0.50	4.00	0.50	40.83	
		1	490	0.50	5.00	0.25	25.52	
L2.5x2x3/16		1	2.75	3.75	1.00	1.00	10.31	
WT6x7		1	7	4.19	1.00	1.00	29.33	
Total for Frame 11:								0.47

By: SSM Date: 5/20/97 Job No. 23423
Project: ACB Lighter Test Bed Calc No. 9.3
Subject: Weight Estimate

		Weight of R1 Side Pontoon (Continued)						
Description		Number	Unit Wt	Length/	Length/	Thickness	Weight	Total
scrit				Area	Area			Weight
			(Lb/Ft) or	Ft or SqFt	Ft or SqFt	Inches	Lbs	Kips
			(Lb/cuFt)					
Frame 10	(Used same as RTB#1 frame 3)							
Plate		1	490	1.25	4.00	0.25	51.04	
		2	490	0.25	1.00	0.25	5.10	
WT6x7		1	7	6.00	1.00	1.00	42.00	
		2	490	0.16	0.42	0.25	1.33	
		1	490	0.50	4.00	0.50	40.83	
		1	490	0.16	1.44	0.25	2.29	
		1	490	0.16	1.00	0.25	1.59	
L2.5x2x3/16		2	2.75	3.75	1.00	1.00	20.63	
WT6x7		1	7.0	7.57	1.00	1.00	52.99	
		1	490	0.50	6.80	0.25	34.71	
		1	490	4.00	7.30	0.19	223.56	
Total for Frame 10:								0.48
Frame 9	(Used same as RTB#1 frame 4)							
WT5x6		3	6	0.55	1.00	1.00	9.90	
WT5x6		1	6	4.81	1.00	1.00	28.86	
WT5x6		1	6	1.44	1.00	1.00	8.64	
pl		1	490	7.79	7.97	0.19	475.35	
open		-1	490	1.83	1.21	0.19	-16.95	
Total for Frame 9:								0.51
Frame 5&8		(Used same as RTB#1)						
		2	490	0.25	1.00	0.25	5.10	
WT6x7		2	7	6.00	1.00	1.00	84.00	
		2	490	0.16	0.42	0.25	1.33	
		1	490	0.50	7.97	0.50	81.36	
		1	490	1.25	7.97	0.25	101.70	
WT 6x7		1	7	7.57	1.00	1.00	52.99	
Total for Frame 5								0.32
Total for Frame 8								0.32

		Weight of R1 Side Pontoon (Continued)						
Description		Number	Unit Wt	Length/ Area	Length/ Area	Thickness	Weight	Total Weight
			(Lb/Ft) or (Lb/cuFt)	Ft or SqFt	Ft or SqFt	Inches	Lbs	Kips
Frame 6/7		(Used same as RTB#1)						
Plate		1	490	2.83	7.54	0.50	435.65	
		1	490	3.00	7.54	0.25	230.91	
		1	490	7.30	1.00	0.25	74.52	
		1	490	6.90	1.00	0.50	140.88	
		1	490	3.33	1.00	2.50	339.94	
		1	490	1.55	1.00	1.00	63.29	
		1	490	3.79	1.00	0.19	29.02	
		1	490	5.00	1.00	0.75	153.13	
		1	490	12.64	1.00	0.38	193.55	
		-2	490	0.67	1.33	0.50	-36.39	
WT 5x6		1	6	7.50	1.00	1.00	45.00	
Total for Frame 6								1.67
Total for Frame 7								1.67
	Dwg 84							
Frame 4	(Used same as RTB#1 frame 9)							
Plate		1	490.0	8.00	8.00	0.19	490.00	
WT 5x6		1	6	29.41	1.00	1.00	176.46	
less hawes		-1	490	1.07	1.00	1.00	-43.69	
Total for Frame 4:								0.62
Frame 3								
Plate	**1**	**1**	**490**	**1.25**	**7.97**	**0.25**	**101.70**	
	2	**1**	**490**	**0.50**	**7.97**	**0.50**	**81.36**	
	6	**2**	**490**	**0.16**	**0.90**	**0.25**	**2.94**	
	31	**1**	**490**	**2.24**	**2.9**	**0.375**	**99.47**	
	32	**2**	**490**	**0.33**	**2.38**	**0.375**	**24.05**	
	33	**2**	**490**	**0.33**	**0.25**	**0.375**	**2.53**	
	38	**2**	**490**	**0.16**	**0.48**	**0.25**	**1.57**	
WT6X7	**3**	**1**	**7**	**7.46**	**1.00**	**1.00**	**52.22**	
WT6X7	**4**	**2**	**7**	**6.00**	**1.00**	**1.00**	**84.00**	
Total for Frame 3:								0.45

By: SSM Date: 5/20/97 Job No. 23423
Project: ACB Lighter Test Bed Calc No. 9.3
Subject: Weight Estimate

		Weight of R1 Side Pontoon (Continued)						
Description		Number	Unit Wt	Length/ Area	Length/ Area	Thickness	Weight	Total Weight
			(Lb/Ft) or (Lb/cuFt)	Ft or SqFt	Ft or SqFt	Inches	Lbs	Kips
Frame 2								
Plate	5	1	490	0.50	4.98	0.50	50.84	
	34	1	490	1.79	4.98	0.25	91.00	
less moor		-1	490	1.00	1.00	0.19	-7.66	
Pl	18	2	490	0.25	1.92	0.50	19.60	
	35	1	490	2.96	7.79	0.19	176.54	
	38	2	490	0.16	0.48	0.25	1.53	
	40	2	490	0.16	1.46	0.25	4.77	
	42	2	490	0.16	1.38	0.25	4.51	
	43	1	490	0.33	7.29	0.25	24.56	
L2.5X2X3/16	36	3	2.75	2.97	1.00	1.00	24.50	
WT6X7	37	1	7	2.98	1.00	1.00	20.86	
	39	1	7	5.47	1.00	1.00	38.29	
Total for Frame 2:								0.45
Frame 1								
Plate	19	3	490	0.85	0.92	0.75	71.85	
	20	2	490	0.92	6.88	0.75	386.42	
	21	2	490	0.92	0.92	0.75	51.50	
	22	1	490	0.50	1.00	0.75	15.31	
	23	2	490	0.25	0.78	0.25	3.99	
	24	1	490	3.00	4.17	1.00	510.46	
	26	4	490	0.25	1.29	0.25	13.17	
	44	1	490	6.00	7.79	0.50	954.28	
	45	4	490	0.21	0.21	0.50	3.53	
	53	2	490	1.00	1.18	1.50	144.55	
L2.5x2x3/16	25	4	2.75	2.00	1.00	1.00	22.00	
	41	4	2.75	2.55	1.00	1.00	28.05	
Total for Frame 1:								2.21
						Frame total=		9.44

Weight of R1 Side Pontoon -- Continued

Description		Number	Unit Wt (Lb/Ft) or (Lb/cuFt)	Length/ Area Ft or SqFt	Length/ Area Ft or SqFt	Thickness Inches	Weight Lbs	Total Weight Kips
	Dwg 86							
Sect C	(Used same as RTB#1)							
bar		8	490	0.17	0.17	2.00	18.22	
		4	490	0.56	0.83	1.25	94.90	
Sect D	(Used same as RTB#1)							
		4	490	0.56	1.42	1.25	163.22	
Sect G	(Used same as RTB#1)							
		2	490	0.88	0.88	0.25	15.81	
		1	490	1.10	7.97	0.25	89.50	
		1	490	0.50	7.97	0.25	40.68	
Sect H	(Used same as RTB#1)							
		1	490	2.23	7.79	0.19	133.00	
L2.5X2X3/16		3	2.75	2.75	1.00	1.00	22.69	
Sect J	(Used same as RTB#1)							
		1	490	1.00	7.75	0.50	158.23	
L2.5X2X3/16		3	2.75	1.00	1.00	1.00	8.25	
L2.5X2X3/16		2	2.75	0.50	1.00	1.00	2.75	
Sect K	(Used same as RTB#1)							
		1	490	1.25	7.75	0.50	197.79	
L2.5X2X3/16		3	2.75	1.42	1.00	1.00	11.72	
L2.5X2X3/16		1	2.75	0.96	1.00	1.00	2.64	
		1	490	1.00	0.58	1.00	23.68	
		1	490	0.25	1.25	0.25	3.19	
		2	490	5.00	0.42	0.38	64.31	
		1	490	0.71	1.00	1.00	28.99	
Sect L	**20**	**2**	**490**	**0.5**	**3.67**	**0.75**	**112.39**	
	21	**2**	**490**	**0.5**	**4.13**	**0.75**	**126.48**	
	22	**1**	**490**	**3**	**4.13**	**1.00**	**505.93**	
	23	**1**	**490**	**3**	**3.67**	**0.5**	**224.79**	

By: SSM Date: 5/20/97 Job No. 23423
Project: ACB Lighter Test Bed Calc. No. 9.3
Subject: Weight Estimate

		Weight of R1 Side Pontoon -- Continued						
Description		Number	Unit Wt (Lb/Ft) or (Lb/cuFt)	Length/ Area Ft or SqFt	Length/ Area Ft or SqFt	Thickness Inches	Weight Lbs	Total Weight Kips
Sect M/N	(Used same as RTB#1)							
		2	490	0.71	7.79	0.50	2[illegible].85	
L2.5X2X3/16		6	2.75	0.71	1	1.00	[illegible].72	
L2.5X2X3/16		2	2.75	0.38	1	1.00	2.09	
	Dwg 87	(Used same as RTB#1)						
Plan								
	1	1	490	2.21	2.79	1.00	251.77	
	2	4	490	0.41	1.54	0.50	51.56	
	3	1	490	1.21	1.23	0.50	30.39	
	4	1	490	0.65	1.21	0.50	16.06	
	5	2	490	1.23	1.85	0.50	92.92	
	6	2	490	0.19	0.67	0.50	5.20	
	7	2	490	1.08	1.85	0.25	40.79	
	8	2	490	0.67	1.67	1.50	137.07	
	9	1	490	0.88	1.21	0.[illegible]	21.74	
Plan (cont)								
	10	2	490	0.88	1.23	0.5	44.20	
	11	2	490	0.19	10	0.5	77.58	
	12	2	490	0.125	10	0.5	51.04	
	13	2	490	1.85	12	0.5	906.50	
	14	2	490	0.25	0.54	0.25	2.76	
	15	1	490	0.46	0.5	0.25	2.35	
	16	1	9.5	1.21			11.495	
	17	2	9.5	2			38	
	18	1	490	1	3.5	0.5	71.46	
	19	1	490	1.25	3.5	0.5	89.32	
L2.5x2x3/16	20	1	2.75	1.24			3.41	
L2.5x2x3/16	21	1	2.75	0.96			2.64	
	22	1	490	0.25	1.35	0.25	3.45	
L2.5x2x3/16	23	2	2.75	0.69			3.795	
	24	2	490	0.71	3.21	0.5	93.06	
	25	1	490	0.58	1	1	23.68	
	27	1	490	0.71	1	1	23.99	
	28	4	490	0.083	1.9	0.5	12.88	
	29	1	490	0.52	1.21	0.5	12.85	
	30	2	490	0.88	0.96	0.5	34.50	
	31	1	490	1.88	14.31	0.5	549.27	
					Detail total		4999.52	5.00

Weight of R1 Side Pontoon (Continued)

Description		Number	Unit Wt (Lb/Ft) or (Lb/cuFt)	Length/ Area Ft or SqFt	Length/ Area Ft or SqFt	Thickness Inches	Weight Lbs	Total Weight Kips
R1 Long Hawsepipe		(Quantity for one)						
	Dwg 100							
pipe	2	1	63.442	7.72			489.77	
reducer	3	1					65	
bend	4	1					81.5	
pipe	5	1	40.48	4.5			182.16	
cone	6	1	490	4.19	0.33	0.375	21.17	
	7	2	490	1.27	1.31	0.38	51.07	
	8	1	490	1.00	1.27	0.38	19.45	
	9	1	490	1.25	1.31	0.38	25.13	
cover	11	1	490	1.17	1.83	0.50	43.60	
hinge	12	1					negligible	
Detail1	13	1	-	-	-	-	200.00	
							1178.85	1.18
R1 Transverse Hawsepipe			(Quantity for one)					
	Dwg 101							
pipe	2	1	63.442	4.8			304.52	
reducer	3	1					65	
cone	4	1	490	4.19	0.33	0.375	21.17	
	5	1	490	1	3.96	0.75	121.28	
	6	2	490	1.53	3.79	0.375	177.59	
	7	2	490	1	1.5	0.375	45.94	
	8	1	490	0.33	1.72	0.375	8.69	
	9	1	490	0.33	1.91	0.375	9.65	
	10	1	490	1	3.79	0.375	58.03	
	11	1	490	1.83	4.15	0.25	77.53	
Detail 2	12	1	-	-	-	-	430.00	
cover	14	1	490	1.167	1.67	0.5	39.79	
hinge	15	1					negligible	
					R1 Hawspipe Total		1359.19	1.36

Weight of R1 Side Pontoon (Continued)

Description		Number	Unit Wt (Lb/Ft) or (Lb/cuFt)	Length/ Area Ft or SqFt	Length/ Area Ft or SqFt	Thickness Inches	Weight Lbs	Total Weight Kips
R2 long Hawsepipe		(Quantity for one)						
	Dwg 102							
pipe	2	1					81.5	
reducer	3	1					65	
	4	1	490	2	6.81	0.375	208.56	
	5	2	490	1	1.083	0.375	33.17	
	6	1	490	0.958	1.292	0.375	18.95	
	7	2	490	0.406	0.75	0.375	9.33	
	8	2	490	1	5.167	0.375	158.24	
	9	1	490	0.583	5.67	0.375	50.62	
	10	2	490	0.917	5.67	0.375	159.23	
	11	2	490	1.5	5.67	0.375	260.47	
pipe	12	1	40.48	7.0			283.36	
Detail 1	16	1	-	-	-	-	200.00	
cover	17	1					43.60	
							1572.017	1.57
R2 Transverse Hawsepipe			(Quantity for one)					
	Dwg 103							
	2	1	490	2	6.813	0.375	208.65	
	3	2	490	1	1.083	0.375	33.17	
	4	2	490	0.44	1	0.375	13.48	
	5	2	490	0.41	0.75	0.375	9.42	
	6	2	490	1	4.33	0.375	132.61	
	7	1	490	0.58	4.83	0.375	42.90	
	8	2	490	0.917	4.83	0.375	135.64	
	9	2	490	1.5	4.83	0.375	221.88	
	10	1	490	1	6.74	0.375	103.21	
	11	1	490	1	6.573	0.375	100.65	
	12	2	490	1.5	6.573	0.375	301.95	
	13	2	490	1	1.5	0.375	45.94	
	14	1	490	1.83	2.67	0.25	49.88	
	15	2	490	0.33	1.49	0.375	15.06	
Detail 3	16	1	-	-	-	-	460.00	
cover	17	2					39.79	
					R2 Hawspipe total		1914.20	1.91

By: SSM Date: 5/20/97 Job No. 23423
Project: ACB Lighter Test Bed Calc No. 9.3
Subject: Weight Estimate

		Weight of R1 Side Pontoon (Continued)						
Description		Number	Unit Wt (Lb/Ft) or (Lb/cuFt)	Length/ Area Ft or SqFt	Length/ Area Ft or SqFt	Thickness Inches	Weight Lbs	Total Weight Kips
	Dwg 110							
Ladder#1								
	2	7	25				350	
	3	2	490	0.474	0.474	0.25	4.59	
	4	1	490	0.474	1.67	0.25	8.08	
bar	5	1	490	0.0055	2.167	1	5.84	
					Ladder#1 total=		368.51	0.37
Ladder #2								
	11	2	490	0.208	7.167	0.375	45.65	
	12	7	490	0.0055	1		18.87	
	13	4	3.62	1.167			16.90	
					Ladder #2 total=		81.42	0.08
	Dwg 123							
Lift point								
pin		1	490	0.049	0.33		7.92	
Pl		2	490	1.43	1.79	0.75	156.78	
Masterlink		1	490	0.0167	3.5		28.64	
Pl		1	490	1	1.79	0.75	54.82	
Pl		1	490	1.33	1.79	0.75	72.91	
Misc							20.00	
					Liftpoint total=		341.07	0.34
	Dwg 123							
Iso Connectors								
Iso		1	25				25.00	
Pl		1	490	1.15	1.4	0.25	16.44	
					Iso total=		41.44	0.04

Weight of R1 Side Pontoon (Continued)

Description		Number	Unit Wt	Length/ Area	Length/ Area	Thickness	Weight	Total Weight
			(Lb/Ft) or (Lb/cuFt)	Ft or SqFt	Ft or SqFt	Inches	Lbs	Kips
Mooring ring								
	Dwg 125							
Casting		1	490	0.67	1.167	1	31.93	
		2	490	1.083	1.167	1	103.22	
		2	490	0.67	1.083	1	59.26	
bar		1	490	0.0668	0.5		16.[illegible]	
					Mooring ring total=		210.77	0.21
Iso A	(Quantity for one, 2 per side pontoon)							
	Dwg 120							
	2	2	490	1.33	1.58	1	171.6	
bar	3	2	490	0.0085	3.63	30.24	76.19	
	4	1	490	0.58	0.65	0.5	7.70	
	5	1	27.48		7.15		196.48	
	6	1	27.48		0.45		12.37	
	7	1	490	0.21	0.25	0.75	1.61	
	8	2	490	0.45	0.33	0.375	4.55	
	9	1	490	0.5	0.5	0.5	5.10	
iso cover	10	1					63.15	
iso		2	25				50.00	
						Iso A total	588.76	0.59
Iso B	(Quantity for one, 2 per side pontoon)							
	Dwg 121							
	2	2	490	1.04	1.04	1	88.33	
	3	2	490				negigible	
	4	2	490	0.58	0.65	0.5	15.39	
	5	1	27.48			7.15	196.48	
	6	1	27.48			0.16	4.40	
	7	1	490	0.25	0.25	0.75	1.91	
	8	2	490	0.5	0.5	0.5	10.21	
		2	25				50.00	
						Iso B total	366.73	0.37

		Weight of R1 Side Pontoon (Continued)						
Description		Number	Unit Wt	Length/ Area	Length/ Area	Thickness	Weight	Total Weight
			(Lb/Ft) or (Lb/cuFt)	Ft or SqFt	Ft or SqFt	Inches	Lbs	Kips
	iso cover							
	10	1	490	1.31	1.56	0.5	41.72	
	11	2	490	0.0085	0.167		1.39	
	12	1	490	0.67	0.96	0.25	6.57	
	13	1	490	0.67	1.19	0.25	8.14	
L2x2x1/4	14	1	3.19		1.67		5.33	
	15						negligible	
						subtotal	63.15	-
Iso C								
	Dwg 130							
TS 6x6x		1	10.4	7.38			76.75	
iso		2	25				50.00	
pl		2	490	0.59	0.54	0.5	312.23	
						Iso C total	126.75	0.13
Corner fender unit		(Quantity for 1, 2 per end pontoon)						
	2	2	490	1.042	1.042	1	88.67	
	3	2	106				212.00	
	4	1	490	0.71	7.44	0.75	161.77	
	5	1	490	0.65	7.44	0.75	148.10	
	8	1	490	0.21	0.21	0.75	1.35	
	9	1	490	0.167	0.33	2	4.50	
					Fender total=		616.40	0.62
Potoon Connectors- Quantity is per assembly								
	Dwg 180	Top & bottom Connectors			(8 per test bed)			
	2	4	490	0.27	0.6	0.375	9.92	
	4	4	490	0.24	0.75	0.25	7.35	
	5	4	490	0.344	0.5	0.25	7.02	
	6	8	490	0.323	0.5	0.25	13.19	
	7	4	490	0.5	0.917	0.25	18.72	
	11	4	490	0.438	0.5	0.25	8.94	
	12	2	490	0.521	0.75	0.375	11.97	
	13	2	490	0.75	0.813	0.5	24.90	
						subtotal	102.01	0.10

		Weight of R1 Side Pontoon (Continued)						
Description		Number	Unit Wt	Length/ Area	Length/ Area	Thickness	Weight	Total Weight
			(Lb/Ft) or (Lb/cuFt)	Ft or SqFt	Ft or SqFt	Inches	Lbs	Kips
	Dwg 181	Shear Connector		(6 per test bed)				
	4	2	490	0.161	0.67	0.1875	1.65	
	5	2	490	0.146	0.531	0.1875	1.19	
	6	2	490	0.224	0.198	0.1875	0.68	
	7	2	490	0.219	0.271	0.1875	0.91	
	9	1	490	1	1.167	0.1875	8.93	
	10	1	490	0.67	0.67	0.1875	3.44	
	11	1	490	0.33	0.646	0.33	2.87	
						subtotal	19.67	0.02
	Dwg 182	Shear Connector		(2 per test bed)				
	4	2	490	0.16	0.67	0.19	1.65	
	5	5	490	0.15	0.67	0.19	3.74	
	6	2	490	0.22	0.20	0.19	0.68	
	7	2	490	0.22	0.27	0.19	0.91	
	9	1	490	1.00	1.17	0.19	8.93	
	10	1	490	0.67	0.67	0.19	3.44	
	11	1	490	0.33	0.65	4.00	34.82	
						subtotal	54.18	0.05

By: SSM Date: 5/20/97 Job No. 23423
Project: ACB Lighter Test Bed Calc No. 9.3
Subject: Weight Estimate

			WEIGHT OF MIDDLE PONTOON					
Description		Number	Unit Wt	Length/ Area	Length/ Area	Thickness	Weight	Total Weight
			(Lb/Ft) or (Lb/cuFt)	Ft or SqFt	Ft or SqFt	Inches	Lbs	Kips
Top Deck Framing								
deck plate	2	1	490	8.00	40.0	0.25	3266.67	
less conn		-16	490	0.5	0.3	0.25	-27.20	
Weight								3.24
L6x4x3/8	3	23	12.3	3.5	1	1	990.15	
	4	14	12.3	3.58	1	1	616.48	
	5	13	12.3	4.15	1	1	663.59	
	6	14	12.3	4.14	1	1	712.91	
	7	7	12.3	2.167	1	1	186.58	
	8	3	12.3	3.33	1	1	122.88	
	9	2	12.3	2.5	1	1	61.50	
	10	1	12.3	1.38	1	1	16.97	
	11	3	12.3	2	1	1	73.80	
Weight								3.44
Total Weight for Top Deck Framing:								6.68
Bottom Deck Framing								
Deck Plate								
	2	1	490	8	8.1	0.25	660.11	
less conn		-16	490	0.5	0.3	0.25	-26.95	
	7	1	490	8.0	34.2	0.25	2792.18	
Weight								3.43
L2.5x2x3/1	4	3	2.75	10.58	1	1	87.29	
	5	3	2.75	18.79	1	1	155.02	
	8	3	2.75	34.69	1	1	286.19	
	9	3	2.75	7.59	1	1	62.62	
Weight								0.59
Total Weight for Bottom Deck Framing:								4.02

By: SSM Date: 5/20/97 Job No. 23423
Project: ACB Lighter Test Bed Calc No. 9.3
Subject: Weight Estimate

		Weight of Middle Pontoon (Continued)						
Description		Number	Unit Wt	Length/ Area	Length/ Area	Thickness	Weight	Total Weight
			(Lb/Ft) or (Lb/cuFt)	Ft or SqFt	Ft or SqFt	Inches	Lbs	Kips
Section A								
Plate	1	1	490	40.00	7.79	0.19	2386.30	
less plate		-1	490	14.05	1	0.19	-107.57	
less conn		-4	490	2.17	1.83	0.19	-121.45	
less conn		-8	490	1.00	1.17	0.19	-71.48	
add shear		4	490	2.17	1.83	1.25	809.65	
add conn		8	490	1.00	1.17	1.00	381.22	
misc conn		8	0.05				0.41	
misc conn		6	0.01				0.06	
misc conn		2	0.03				0.05	
L2.5x2x3/16	2	5	2.75	10.00	1	1	137.50	
L2.5x2x3/16	3	4	2.75	18.79	1	1	206.69	
	7	1	2.75	6.00	1	1	16.50	
	8	1	2.75	9.17	1	1	25.21	
	9	1	2.75	7.23	1	1	19.88	
Weight								3.68
Section B								
Weight								3.68
Total Weight for Sections A and B:								7.37

By: SSM Date: 5/20/97 Job No. 23423
Project: ACB Lighter Test Bed Calc No. 9.3
Subject: Weight Estimate

		Weight of Middle Pontoon (Continued)						
Description		Number	Unit Wt	Length/ Area	Length/ Area	Thickness	Weight	Total Weight
			(Lb/Ft) or (Lb/cuFt)	Ft or SqFt	Ft or SqFt	Inches	Lbs	Kips
Frame 1								
	3	6	490	0.25	1.29	0.25	19.75	
WT5x6	16	1	6	7.55			45.30	
	22	3	490	0.25	0.50	0.25	3.83	
	23	1	490	2.50	7.97	0.19	152.55	
	27	2	490	0.67	0.79	0.25	10.81	
Total for Frame 1:								0.23
Frame 2								
	6	4	490	0.25	0.85	0.25	8.68	
	7	1	490	1.25	7.89	0.25	100.68	
	8	1	490	0.50	7.89	0.50	80.54	
WT5x6	10	1	6	7.89			47.34	
	11	4	490	0.16	0.42	0.25	2.72	
WT6x7	21	2	7	5.42			75.88	
Total for Frame 2:								0.32
Frame 6/7/11		(Use same as Center Test Bed)						
		4	490	0.25	0.85	0.25	8.68	
Plate		1	490	1.25	7.89	0.25	100.68	
		1	490	0.50	7.89	0.50	80.54	
WT5X6		2	6	6.08			73.00	
WT5X6		1	6	7.89			47.34	
		4	490	0.16	0.42	0.25	2.68	
L2.5X2X3/16		4	2.75	1.75	1	1	19.25	
L2.5X2X3/16		2	2.75	2.33	1	1	12.82	
L2.5X2X3/16		2	2.75	1.92	1	1	10.56	
Grating		1		2.17	3.00	1.0		
Total for Frame 6:								0.36
Total for Frame 7:								0.31
Total for Frame 11:								0.31

By: SSM Date: 5/20/97 Job No. 23423
Project: ACB Lighter Test Bed Calc No. 9.3
Subject: Weight Estimate

		Weight of Middle Pontoon (Continued)						
Description		Number	Unit Wt	Length/ Area	Length/ Area	Thickness	Weight	Total Weight
			(Lb/Ft) or (Lb/cuFt)	Ft or SqFt	Ft or SqFt	Inches	Lbs	Kips
Frame 3/5/8/10		(Use same as Center Test Bed)						
Plate		1	490	1.25	7.89	0.25	100.68	
		1	490	0.50	7.89	0.50	80.54	
WT5X6		2	6	6.08			73.00	
WT5X6		1	6	7.89			47.34	
Total for Frame 3								0.30
Total for Frame 5								0.30
Total for Frame 8								0.30
Total for Frame 10								0.30
Frame 4/9		(Use same as Center Test Bed)						
Plate		1	490.0	7.79	8.00	0.19	477.14	
WT 5x6		4	6	7.55			181.20	
Total for Frame 4								0.66
Total for Frame 9								0.66
Frame 12		(Use same as Center Test Bed)						
Plate		1	490	7.79	8.00	0.19	477.14	
WT5X6		1	6	6.96			41.76	
		6	490	0.3	1.29	0.25	19.75	
		3	490	0.25	0.78	0.25	5.97	
WT5X6		3	6	0.75			13.50	
		3	6	5.68			102.24	
Total for Frame 12								0.66
						Frames total		4.71

By: SSM Date: 5/20/97 Job No. 23423
Project: ACB Lighter Test Bed Calc No. 9.3
Subject: Weight Estimate

			WEIGHT OF R2 SIDE PONTOON					
Description		Number	Unit Wt	Length/ Area	Length/ Area	Thickness	Weight	Total Weight
			(Lb/Ft) or (Lb/cuFt)	Ft or SqFt	Ft or SqFt	Inches	Lbs	Kips
Top Deck Framing		Dwg 91						
deck plate								
	2	**1**	**490**	**2.00**	**8.0**	**0.75**	**490.00**	
less plate	2A	-1	490	1.25	1.0	0.5	-25.52	
less plate	2B	-1	490	0.708	0.708	0.5	-10.24	
	-	**1**	**490**	**16.67**	**8.0**	**0.25**	**1361.38**	
less plate	3A	-1	490	3.83	3.42	0.25	-133.71	
	11	**1**	**490**	**3.83**	**3.42**	**0.5**	**267.43**	
Adjustment between FR6 and FR7								
add Pl		1	490	4.167	8.0	0.25	340.31	
less Pl		-1	490	4.000	5.7	0.25	-231.53	
add Pl		1	490	4.000	5.7	0.75	698.25	
	33	1	490	13.920	8.0	0.25	1136.80	
less plate	33B	-1	490	10.75	1.21	0.25	-132.78	
	5	1	490	4.0	8.0	0.75	980.00	
less plate	5A	-1	490	2.33	1.0	0.75	-71.36	
less plate	5B	-1	490	1.25	1.2	0.75	-46.32	
less plate	5C	-1	490	0.708	0.708	0.75	-15.36	
less hawes	3C	-2	490	1.6	1.0	0.25	-32.87	
less conn	3D	-8	490	0.5	0.3	0.25	-13.60	
Weight								4.56
PL	**27**	**deleted**						
	19	**16**	**490.0**	**0.5**	**1.83**	**0.3**	**149.45**	
L6x4x3/8	**4**	**2**	**12.3**	**2.77**	**1**	**1**	**68.14**	
	5	**7**	**12.3**	**3.45**	**1**	**1**	**297.05**	
	7	**1**	**12.3**	**1.083**	**1**	**1**	**13.32**	
	8	**1**	**12.3**	**1.92**	**1**	**1**	**23.62**	
	9	**11**	**12.3**	**3.58**	**1**	**1**	**484.37**	
	14	**11**	**12.3**	**3.48**	**1**	**1**	**470.84**	
	15	**2**	**12.3**	**2.45**	**1**	**1**	**60.27**	
	17	**14**	**12.3**	**3.89**	**1**	**1**	**669.86**	
	18	**11**	**12.3**	**4.15**	**1**	**1**	**561.50**	
	20	**6**	**12.3**	**1.083**	**1**	**1**	**79.93**	
	21	**2**	**12.3**	**2.65**	**1**	**1**	**65.19**	
	22	**2**	**12.3**	**0.83**	**1**	**1**	**20.42**	
	25	**1**	**12.3**	**2.49**	**1**	**1**	**30.63**	
	26	**1**	**12.3**	**1.92**	**1**	**1**	**23.62**	
	27	**1**	**12.3**	**2.17**	**1**	**1**	**26.69**	
Weight								3.04
Total Weight for Top Deck Framing:								7.61

By: SSM Date: 5/20/97 Job No. 23423
Project: ACB Lighter Test Bed Calc No. 9.3
Subject: Weight Estimate

			WEIGHT OF R2 SIDE PONTOON					
Description		Number	Unit Wt	Length/ Area	Length/ Area	Thickness	Weight	Total Weight
			(Lb/Ft) or (Lb/cuFt)	Ft or SqFt	Ft or SqFt	Inches	Lbs	Kips
Bottom Deck Framing			Dwg 92					
Deck Plate								
	2	1	490	2.0	8	0.38	245.00	
less plate	2A	-2	490	1	1.25	0.38	-38.28	
less plate	2B	-2	490	0.75	1.00	0.38	-22.97	
	3	1	490	26.7	8.0	0.31	2724.60	
less pl	3A	-1	490	2.5	4.0	0.31	-127.60	
	4	1	490	8.00	8.0	0.31	816.67	
	5	1	490	2.50	4.0	0.50	204.17	
	7	1	490	5.50	8.0	0.31	561.46	
less conn		-8	490	0.5	0.3	0.31	-16.84	
Weight								4.35
L2.5x2x3/16	9	2	2.75	7.46	1	1	41.03	
	10	2	2.75	9.55	1	1	52.53	
	11	4	2.75	18.79	1	1	206.69	
	12	4	2.75	5.29	1	1	58.19	
	13	1	2.75	3.65	1	1	10.04	
	14	2	2.75	6.35	1	1	34.93	
Weight								0.40
Total Weight for Bottom Deck Framing:								4.75

By: SSM Date: 5/20/97 Job No. 23423
Project: ACB Lighter Test Bed Calc No. 9.3
Subject: Weight Estimate

		Weight of R1 Side Pontoon (Continued)						
Description		Number	Unit Wt	Length/ Area	Length/ Area	Thickness	Weight	Total Weight
			(Lb/Ft) or (Lb/cuFt)	Ft or SqFt	Ft or SqFt	Inches	Lbs	Kips
	Dwg 93							
Section A								
Plate	1	1	490	38.00	7.79	0.19	2266.99	
less plate		-1	490	9.29	1	0.19	-71.13	
less shear		-4	490	2.17	1.83	0.19	-121.45	
less conn		-8	490	1.00	1.17	0.19	-71.48	
add shear		4	490	2.17	1.83	1.25	809.65	
add conn		8	490	1.00	1.17	1.00	381.22	
misc conn		4	0.05				0.20	
misc conn		3	0.01				0.03	
misc conn		1	0.03				0.03	
Weight								3.19
L2.5x2x3/16	2	4	2.75	9.55	1.00	1.00	105.05	
	3	1	2.75	5.71	1.00	1.00	15.70	
	4	2	2.75	3.35	1.00	1.00	18.43	
	5	3	2.75	18.79	1.00	1.00	155.02	
	6	1	2.75	3.91	1.00	1.00	10.75	
	8	1	2.75	9.90	1.00	1.00	27.23	
	9	1	2.75	6.10	1.00	1.00	16.78	
	11	1	2.75	3.82	1.00	1.00	10.51	
	12	1	2.75	5.43	1.00	1.00	14.93	
	13	1	2.75	7.23	1.00	1.00	19.88	
Weight								0.39
Section B								
Plate	15	1	490	38.58	7.79	0.19	2301.00	
less plate		-1	490	10.58	1	0.19	-81.00	
less R1		-1	490	2.17	7.00	0.19	-116.12	
less ladder		-7	490	0.44	1	0.19	-23.58	
less moor		-2	490	1.17	0.67	0.19	-11.97	
less pipe		-1	490	1.07	1	0.19	-8.19	
Plate	29	1	490	0.21	0.21	0.50	0.90	
Weight								2.06
L2.5x2x3/16	14	4	2.75	2.63	1	1	28.93	
	17	5	2.75	9.72	1	1	133.65	
	18	3	2.75	2.23	1	1	18.40	
	19	1	2.75	1.30	1	1	3.58	
	20	1	2.75	6.43	1	1	17.68	
	21	3	2.75	5.34	1	1	44.06	
	22	1	2.75	5.00	1	1	13.75	
	23	3	2.75	8.27	1	1	68.23	

By: SSM Date: 5/20/97 Job No. 23423
Project: ACB Lighter Test Bed Calc No. 9.3
Subject: Weight Estimate

		Weight of R1 Side Pontoon (Continued)						
Description		Number	Unit Wt	Length/ Area	Length/ Area	Thickness	Weight	Total Weight
			(Lb/Ft) or (Lb/cuFt)	Ft or SqFt	Ft or SqFt	Inches	Lbs	Kips
Section B (cont)								
	24	1	2.75	1.57	1	1	4.32	
	25	1	2.75	6.11	1	1	16.80	
	26	1	2.75	7.28	1	1	20.02	
	27	1	2.75	9.25	1	1	25.44	
	28	1	2.75	2.08	1	[illegible]	5.73	
L 6X4X3/8								
	16	2	12.3	3.49	1.00	1.00	85.85	
Weight								0.49
Total Weight for Sections A and B:								6.14
	Dwg 95							
Frame 12	(Used same as RTB#2-R1 frames)							
Plate		1	490	2.50	6.00	0.50	306.25	
less open		-1	490	1.54	1.54	0.50	-48.42	
L2.5x2x3/16		1	2.75	0.54	1.00	1.00	1.49	
		1	2.75	1.42	1.00	1.00	3.91	
		3	490	0.25	1.29	0.25	9.88	
		1	490	0.25	1.79	0.25	4.57	
		1	2.75	1.94	1.00	1.00	5.34	
Total for Frame 12:								0.28
Frame 11	(Used same as RTB#2-R1 frames)							
L4x3x1/4		2	6.2	3.00	1.00	1.00	37.20	
Plate		1	490	1.25	4.00	0.25	51.04	
		2	490	0.25	1.00	0.25	5.10	
WT6x7		1	7	8.00	1.00	1.00	56.00	
		4	490	0.16	0.42	0.25	2.66	
		1	490	3.96	5.47	0.25	221.[illegible]2	
minus mooring		-1	490	1.00	1.00	0.25	-10.21	
		1	490	0.50	4.00	0.50	40.83	
		1	490	0.50	5.00	0.25	25.52	
L2.5x2x3/16		1	2.75	3.75	1.00	1.00	10.31	
WT6x7		1	7	4.19	1.00	1.00	29.33	
Total for Frame 11:								0.47

By: SSM Date: 5/20/97 Job No. 23423
Project: ACB Lighter Test Bed Calc No. 9.3
Subject: Weight Estimate

		Weight of R1 Side Pontoon (Continued)						
Description		Number	Unit Wt	Length/ Area	Length/ Area	Thickness	Weight	Total Weight
			(Lb/Ft) or (Lb/cuFt)	Ft or SqFt	Ft or SqFt	Inches	Lbs	Kips
Frame 10	(Used same as RTB#2-R1 frames)							
Plate		1	490	1.25	4.00	0.25	51.04	
		2	490	0.25	1.00	0.25	5.10	
WT6x7		1	7	6.00	1.00	1.00	42.00	
		2	490	0.16	0.42	0.25	1.33	
		1	490	0.50	4.00	0.50	40.83	
		1	490	0.16	1.44	0.25	2.29	
		1	490	0.16	1.00	0.25	1.59	
L2.5x2x3/16		2	2.75	3.75	1.00	1.00	20.63	
WT6x7		1	7.0	7.57	1.00	1.00	52.99	
		1	490	0.50	6.80	0.25	34.71	
		1	490	4.00	7.30	0.19	223.56	
Total for Frame 10:								0.48
Frame 9	(Used same as RTB#2-R1 frames)							
WT5x6		3	6	0.55	1.00	1.00	9.90	
WT5x6		1	6	4.81	1.00	1.00	28.86	
WT5x6		1	6	1.44	1.00	1.00	8.64	
pl		1	490	7.79	7.97	0.19	475.35	
open		-1	490	1.83	1.21	0.19	-16.95	
Total for Frame 9:								0.51
Frame 5&8		(Used same as RTB#2-R1 frames)						
		2	490	0.25	1.00	0.25	5.10	
WT6x7		2	7	6.00	1.00	1.00	84.00	
		2	490	0.16	0.42	0.25	1.33	
		1	490	0.50	7.97	0.50	81.36	
		1	490	1.25	7.97	0.25	101.70	
WT 6x7		1	7	7.57	1.00	1.00	52.99	
Total for Frame 5								0.32
Total for Frame 8								0.32

		Weight of R1 Side Pontoon (Continued)						
Description		Number	Unit Wt	Length/ Area	Length/ Area	Thickness	Weight	Total Weight
			(Lb/Ft) or (Lb/cuFt)	Ft or SqFt	Ft or SqFt	Inches	Lbs	Kips
Frame 6/7		(Used same as RTB#1-R2 frames)						
Plate	7	2	490	0.25	1.00	0.25	5.10	
WT6x7	8	1	7	6.00	1.00	1.00	42.00	
	10	2	490	0.16	0.58	1.00	7.58	
	33	1	490	0.50	7.00	0.50	71.46	
	34	1	490	1.25	7.00	0.25	89.32	
WT6x7	35	1	7	7.00	1.00	1.00	49.00	
	36	1	490	0.67	6.00	0.25	41.04	
	37	1	490	0.33	6.00	0.38	30.32	
	38	1	490	0.33	1.70	0.38	8.59	
	39	1	490	0.17	0.75	0.25	1.28	
	40	1	490	0.33	0.94	0.38	4.75	
	41	1	490	0.96	1.79	0.25	17.54	
	42	1	490	0.92	2.00	0.25	18.78	
Total for Frame 6								0.39
Total for Frame 7								0.39
	Dwg 84							
Frame 4	(Used same as RTB#2-R1 frames)							
Plate		1	490.0	8.00	8.00	0.19	490.00	
WT 5x6		1	6	29.41	1.00	1.00	176.46	
less hawes		-1	490	1.07	1.00	1.00	-43.69	
Total for Frame 4:								0.62
Frame 3	(Used same as RTB#2-R1 frames)							
Plate	**1**	**1**	**490**	**1.25**	**7.97**	**0.25**	**101.70**	
	2	**1**	**490**	**0.50**	**7.97**	**0.50**	**81.36**	
	6	**2**	**490**	**0.16**	**0.90**	**0.25**	**2.94**	
	31	**1**	**490**	**2.24**	**2.9**	**0.375**	**99.47**	
	32	**2**	**490**	**0.33**	**2.38**	**0.375**	**24.05**	
	33	**2**	**490**	**0.33**	**0.25**	**0.375**	**2.53**	
	38	**2**	**490**	**0.16**	**0.48**	**0.25**	**1.57**	
WT6X7	**3**	**1**	**7**	**7.46**	**1.00**	**1.00**	**52.22**	
WT6X7	**4**	**2**	**7**	**6.00**	**1.00**	**1.00**	**84.00**	
Total for Frame 3:								0.45

By: SSM Date: 5/20/97 Job No. 23423
Project: ACB Lighter Test Bed Calc No. 9.3
Subject: Weight Estimate

		Weight of R1 Side Pontoon (Continued)						
Description		Number	Unit Wt	Length/ Area	Length/ Area	Thickness	Weight	Total Weight
			(Lb/Ft) or (Lb/cuFt)	Ft or SqFt	Ft or SqFt	Inches	Lbs	Kips
Frame 2	(Used same as RTB#2-R1 frames)							
Plate	**5**	**1**	**490**	**0.50**	**4.98**	**0.50**	**50.84**	
	34	**1**	**490**	**1.79**	**4.98**	**0.25**	**91.00**	
less moor		**-1**	**490**	**1.00**	**1.00**	**0.19**	**-7.66**	
Pl	**18**	**2**	**490**	**0.25**	**1.92**	**0.50**	**19.60**	
	35	**1**	**490**	**2.96**	**7.79**	**0.19**	**176.54**	
	38	**2**	**490**	**0.16**	**0.48**	**0.25**	**1.53**	
	40	**2**	**490**	**0.16**	**1.46**	**0.25**	**4.77**	
	42	**2**	**490**	**0.16**	**1.38**	**0.25**	**4.51**	
	43	**1**	**490**	**0.33**	**7.29**	**0.25**	**24.56**	
L2.5X2X3/16	**36**	**3**	**2.75**	**2.97**	**1.00**	**1.00**	**24.50**	
WT6X7	**37**	**1**	**7**	**2.98**	**1.00**	**1.00**	**20.86**	
	39	**1**	**7**	**5.47**	**1.00**	**1.00**	**38.29**	
Total for Frame 2:								0.45
Frame 1	(Used same as RTB#2-R1 frames)							
Plate	19	3	490	0.85	0.92	0.75	71.85	
	20	2	490	0.92	6.88	0.75	386.42	
	21	2	490	0.92	0.92	0.75	51.50	
	22	1	490	0.50	1.00	0.75	15.31	
	23	2	490	0.25	0.78	0.25	3.99	
	24	1	490	3.00	4.17	1.00	510.46	
	26	4	490	0.25	1.29	0.25	13.17	
	44	1	490	6.00	7.79	0.50	954.28	
	45	4	490	0.21	0.21	0.50	3.53	
	58	2	490	1.00	1.18	1.50	144.55	
L2.5x2x3/16	25	4	2.75	2.00	1.00	1.00	22.00	
	41	4	2.75	2.55	1.00	1.00	28.05	
Total for Frame 1:								2.21
						Frame total=		6.88

Weight of R1 Side Pontoon -- Continued

Description		Number	Unit Wt (Lb/Ft) or (Lb/cuFt)	Length/ Area Ft or SqFt	Length/ Area Ft or SqFt	Thickness Inches	Weight Lbs	Total Weight Kips
	Dwg 95	(Used same as RTB#2)						
Sect G								
	38	2	490	0.88	0.88	0.25	15.81	
	39	1	490	1.10	7.97	0.25	89.50	
	40	1	490	0.50	7.97	0.25	40.68	
	Dwg 96	(Used same as RTB#2)						
Sect H								
		1	490	2.23	7.79	0.19	133.00	
L2.5X2X3/16		3	2.75	2.75	1.00	1.00	22.69	
Sect J								
		1	490	1.00	7.75	0.50	158.23	
L2.5X2X3/16		3	2.75	1.00	1.00	1.00	8.25	
L2.5X2X3/16		2	2.75	0.50	1.00	1.00	2.75	
Sect K								
		1	490	1.25	7.75	0.50	197.79	
L2.5X2X3/16		3	2.75	1.42	1.00	1.00	11.72	
L2.5X2X3/16		1	2.75	0.96	1.00	1.00	2.64	
		1	490	1.00	0.58	1.00	23.68	
		1	490	0.25	1.25	0.25	3.19	
		2	490	5.00	0.42	0.38	64.31	
		1	490	0.71	1.00	1.00	28.99	
Sect L	**20**	**2**	**490**	**0.5**	**3.67**	**0.75**	**112.39**	
	21	**2**	**490**	**0.5**	**4.13**	**0.75**	**126.48**	
	22	**1**	**490**	**3**	**4.13**	**1.00**	**505.93**	
	23	**1**	**490**	**3**	**3.67**	**0.5**	**224.79**	
Sect M/N								
		2	490	0.71	7.79	0.50	225.85	
L2.5X2X3/16		6	2.75	0.71	1	1.00	11.72	
L2.5X2X3/16		2	2.75	0.38	1	1.00	2.09	

By: SSM
Project: ACB Lighter Test Bed
Subject: Weight Estimate

Date: 5/20/97

Job No. 23423
Calc No. 9.3

		Weight of R1 Side Pontoon -- Continued						
Description		Number	Unit Wt	Length/ Area	Length/ Area	Thickness	Weight	Total Weight
			(Lb/Ft) or (Lb/cuFt)	Ft or SqFt	Ft or SqFt	Inches	Lbs	Kips
	Dwg 97	(Used same as RTB#2)						
Plan								
	1	1	490	2.21	2.79	1.00	251.77	
	2	4	490	0.41	1.54	0.50	51.56	
	3	1	490	1.21	1.23	0.50	30.39	
	4	1	490	0.65	1.21	0.50	16.06	
	5	2	490	1.23	1.85	0.50	92.92	
	6	2	490	0.19	0.67	0.50	5.20	
	7	2	490	1.08	1.85	0.25	40.79	
	8	2	490	0.67	1.67	1.50	137.07	
	9	1	490	0.88	1.21	0.50	21.74	
	10	2	490	0.88	1.23	0.5	44.20	
	11	2	490	0.19	10	0.5	77.58	
	12	2	490	0.125	10	0.5	51.04	
	13	2	490	1.85	12	0.5	906.50	
	14	2	490	0.25	0.54	0.25	2.76	
	15	1	490	0.46	0.5	0.25	2.35	
	16	1	9.5	1.21			11.495	
	17	2	9.5	2			38	
	18	1	490	1	3.5	0.5	71.46	
	19	1	490	1.25	3.5	0.5	89.32	
L2.5x2x3/16	20	1	2.75	1.24			3.41	
L2.5x2x3/16	21	1	2.75	0.96			2.64	
	22	1	490	0.25	1.35	0.25	3.45	
L2.5x2x3/16	23	2	2.75	0.69			3.795	
	24	2	490	0.71	3.21	0.5	93.06	
	25	1	490	0.58	1	1	23.68	
	27	1	490	0.71	1	1	28.99	
	28	4	490	0.083	1.9	0.5	12.88	
	29	1	490	0.52	1.21	0.5	12.85	
	30	2	490	0.88	0.96	0.5	34.50	
	31	1	490	1.88	14.31	0.5	549.27	
					Detail total		4723.18	4.72

			F1 CONNECTOR					
Describtion		Number	Unit Wt	Length/ Area	Length/ Area	Thickness	Weight	Total Weight
			(Lb/Ft) or (Lb/cuFt)	Ft or SqFt	Ft or SqFt	Inches	Lbs	Kips
Docking Connector								
	Flange Plate	2	490	2.1667	1.1667	1	206.44	
	Web Plate	2	490	3.9200	1	0.75	240.10	
	Cheek Plate	2	490	0.83	0.83	0.5	28.13	
	OD 4.5	1	27.5	0.5	1	1	13.75	
	Stiffeners	7	490	0.52	0.25	0.625	23.22	
	Outboard Face	1	490	1.1667	1	0.75	35.73	
	OD 5	2	56.1	0.25	1	1	28.05	
	Vert Bars	2	490	0.375	1	1.5	45.94	
	Vert Bars	2	490	0.33	1	1.125	30.32	
	Vert Bars	2	490	0.656	1	1	53.57	
	Inboard Face	1	490	1	1.04	0.5	21.23	
	End Pipe	1	28.5	0.33	1	1	9.41	
	PIN	1	490	0.0491	1.25	1	30.07	
Fixed Connector								
	Flange Plate	2	490	2.1667	1.1667	1	206.44	
	Web Plate	2	490	2.9500	1	0.75	180.69	
	Cheek Plate	2	490	0.83	0.95	0.5	32.20	
	Outboard Face	1	490	1	1.16	0.75	35.53	
	Vert Bars	2	490	0.375	1	1.5	45.94	
	Vert Bars	2	490	0.32	1	1.5	39.20	
	Inboard Face	2	490	0.48	0.67	0.5	13.13	
	Fender	1	69	4.75	1	1	327.75	
	Chain	1	10	5	1	1	50.00	
	Total:							1.70

By: SSM
Project: ACB Lighter Test Bed
Subject: Weight Estimate

Date: 5/20/97

Job No. 23423
Calc No. 9.3

			R1 CONNECTOR					
Description		Number	Unit Wt	Length/ Area	Length/ Area	Thickness	Weight	Total Weight
			(Lb/Ft) or (Lb/cuFt)	Ft or SqFt	Ft or SqFt	Inches	Lbs	Kips
FRAME								
3.5x2.5x.25 TS		1	8.81	25	1	1	220.25	
3.5x2.5x.25 TS		1	8.81	9	1	1	79.29	
3.5x2.5x.25 TS		1	8.81	10.79	1	1	95.06	
3.5x2.5x.25 TS		1	8.81	25.33	1	1	223.16	
3.5x2.5x.25 TS		2	8.81	4.5	1	1	79.29	
3.5x2.5x.25 TS		2	8.81	3.33	1	1	58.67	
3.5x2.5x.25 TS		2	8.81	4.67	1	1	82.29	
5.0x2.0x.25 TS		2	10.51	2.25	1	1	47.30	
Bent Plate		2	490	6.33	0.48	0.25	62.03	
Bent Plate		2	490	6.33	0.33	0.25	43.07	
Pl		4	490	0.58	1.17	1.5	165.83	
		2	490	0.92	2.13	0.5	80.02	
		2	490	0.33	0.50	0.375	5.05	
		2	490	0.25	1.54	0.75	23.58	
		2	490	0.33	1.71	0.375	17.28	
		1	490	0.5	1.71	0.25	8.73	
		4	490	0.92	1.17	1	175.81	
Tube 18"		1	490	4.25	0.92	0.875	139.25	
Tube 17.75"		1	490	4.12	0.92	1	154.27	
Total:								1.76
BEARING BLOCK								
Plate		1	490	0.92	2.5	1	94	
Plate		4	490	0.31	0.92	0.5	23	
Plate		4	490	0.58	1.167	1.5	166	
Plate		2	490	2.125	6.33	1.5	1648	
Plate		1	490	2.11	1	0.375	32	
Plate		2	490	0.21	1.54	0.75	20	
L4x3x3/8		4	8.5	2.25			77	
L4x3x3/8		2	8.5	2.67			45	
L4x3x3/8		2	8.5	1.83			31	
L8x8x1/2		1	26.4	1.79			47	
Total								2.18
PIN ASSEMBLY								
Tube:								
OD16.25		1	490	3.35	2.65	1.75	634	
OD17.5		1	490	4.19	0.5	0.75	64	
OD18.25		1	490	4.65	2.81	0.25	133	
OD11.75		1	490	2.88	0.458	0.375	20	
OD 2.25		1	490	0.123	5.083	0.375	10	
OD 12		1	490	0.721	0.292	0.25	2	
OD 12.625		1	490	0.802	0.083	0.25	1	
Plate:								
Dia 18.25		1	490	1.817	1	1	74	
Dia 15		1	490	1.227	1	0.75	38	
Dia 12.75		1	490	0.894	1	0.5	18	

By: SSM Date: 5/20/97 Job No. 23423
Project: ACB Lighter Test Bed Calc No. 9.3
Subject: Weight Estimate

			R1 CONNECTOR (cont)					
Description		Number	Unit Wt	Length/ Area	Length/ Area	Thickness	Weight	Total Weight
			(Lb/Ft) or (Lb/cuFt)	Ft or SqFt	Ft or SqFt	Inches	Lbs	Kips
Dia 16.25		1	490	1.44	1	9	529	
Dia 6		1	490	0.2	1	0.75	6	
Dia 12.75		1	490	0.89	1	1	[illegible]	
Dia 3		1	490	0.35	1	0.5		
		8	490	0.25	0.58	0.5	24	
		1	490	0.0313	2.75	0.75	3	
Screws/Washer/Nuts							1	
Total:								1.60
LEVER AND ROLLER ASSEMBLY								
		2	490	0.208	4.95	0.75	63	
		2	490	0.167	0.458	0.75	5	
		8	490	0.007	1	9.5	22	
DIA 1		1	490	0.005	1.33		3	
DIA 1		1	490	0.005	1.79		4	
DIA 5/8		1	490	0.002	0.92		1	
pipe		2	3		7		42	
pipe		2	1.68		0.208		1	
MISC							1	
Total:								0.14
GIULLOTINE								
Outboard mating guillotine							130	
Inboard mating guillotine							115	
Reaction guillotine							150	
Total:								0.40
TOTAL FOR R1 CONNECTOR:								6.08
TOTAL FOR 3 CONNECTORS:								18.24

By: SSM Date: 5/20/97 Job No. 23423
Project: ACB Lighter Test Bed Calc No. 9.3
Subject: Weight Estimate

			R2 CONNECTOR					
Description		Number	Unit Wt	Length/ Area	Length/ Area	Thickness	Weight	Total Weight
			(Lb/Ft) or (Lb/cuFt)	Ft or SqFt	Ft or SqFt	Inches	Lbs	Kips
Lower Pin Assembly								
	Lower pin assembly						1140	
	Rubber alignment pin assembly						200	
Total:								1.34
Upper Pin Assembly:								
Plate:	3	1	490	0.25	0.25	0.25	0.64	
	4	1	490	0.5	0.67	3.25	44.46	
		1	490	0.17	0.67	1.5	6.98	
		1	490	0.25	0.67	1.5	10.26	
		1	490	0.25	0.67	1	6.84	
		-1	490	0.022	1	0.792	-8.54	
	5	1	490	0.5	0.67	3.25	44.46	
		1	490	0.17	0.67	1.5	6.98	
		1	490	0.25	0.67	1.5	10.26	
		1	490	0.25	0.67	1	6.84	
	6	2	490	0.58	1.58	0.5	37.42	
	7	2	490	0.5	1.58	0.5	32.26	
	8	2	490	0.042	1.75	0.5	3.00	
	9	8	490	0.042	0.167	0.5	1.15	
	10	1	490	0.188	0.33	0.125	0.32	
Total:								0.20
Guillotine:								
Upper Plates		1					40.00	
Lower Plates		1					185.00	
Release Mechanism								
Frame Assembly		Dwg 173						
	4	1	490	0.85	1.167	0.375	15.19	
	5	4	490	0.25	0.24	0.375	3.68	

By: SSM Date: 5/20/97 Job No. 23423
Project: ACB Lighter Test Bed Calc No. 9.3
Subject: Weight Estimate

			R2 CONNECTOR (cont)					
Description		Number	Unit Wt	Length/ Area	Length/ Area	Thickness	Weight	Total Weight
			(Lb/Ft) or (Lb/cuFt)	Ft or SqFt	Ft or SqFt	Inches	Lbs	Kips
TS2x2x1/4	6	2	5.41			2.5	27.05	
	7	2	490	0.104	2.5	0.25	5.31	
	8	1	490	0.083	0.229	1	0.78	
	9	6	490	0.083	0.146	0.5	1.48	
	10	9	490	0.083	0.229	0.5	3.49	
handle	11		490	0.247		1.5	15.13	
	12	1	490	0.083	0.083	0.5	0.14	
Tie-down Bar		2	490	0.25	0.125	1	2.55	
Pawl Assembly								
C3x6	13	1	6	0.27			1.62	
misc							5.00	
Release bar assembly								
Bar		1	490	0.167	0.83	1	5.66	
misc							5.00	
Total:								0.23
TOTAL FOR R2 CONNECTOR:								1.77
TOTAL FOR 3 CONNECTORS:								5.30

APPENDIX D

STRUCTURAL ANALYSIS REPORT

Amphibious Cargo Beaching Lighter - Design Phase

Technical Report - Structural Analysis

Prepared for
Naval Facilities Engineering Service Center
Port Hueneme, CA 93043

by
PMB Engineering, Inc.
P.O. Box 193965
San Francisco, CA 94119-3965

Contract Number:
N47408-93-D-7001
D.O. 19, CDRL A002

February 1997

Amphibious Cargo Beaching Lighter - Design Phase

VOLUME 1:

EXECUTIVE SUMMARY

1. INTRODUCTION

2. OBJECTIVES

3. DESCRIPTION OF STRUCTURE

4. SEQUENCE OF ANALYSES

5. COMPUTER MODEL

6. DESIGN LOADS

7. PRELIMINARY ANALYSIS

   7.1 Strength Check
   7.2 Buckling Check
   7.3 Plate Thickness Optimization

8. FINAL ANALYSIS

   8.1 Computer Model
   8.2 Results

9. RECOMMENDATIONS

VOLUME 2:

APPENDIX: DETAILED DATA/RESULTS, SUPPORTING CALCULATIONS AND ELECTRONIC FILES

A finite element analysis was performed for the hull structure of the center test bed of the Amphibious Cargo Beaching Lighter. The results are applicable to the raked test bed. This analysis focused solely on the evaluation of the pontoon stiffened plate under the design loading conditions, namely a balanced set of external loads consisting of connector loads and test bed self weight. The various test bed connectors and the hull structure stiffeners were designed based on hand calculations and were not part of this analysis task. They will be covered in the overall project final report.

A preliminary analysis was first performed using a computer model with hand calculated plate thicknesses. Following this analysis, plate sizes were checked for strength and buckling and revised, as applicable. A final confirmatory analysis followed to ensure that the revised structure was adequate.

This task contributed significantly to achieving overall weight optimization by defining ranges of plate thickness. The final plate thicknesses determined solely from this analysis (summarized in Sections 7.3 and 8.3 of this report) are recommended as minimum requirements for strength and buckling with respect to global stability of the test bed. Areas of locally high stresses in the proximity of connector load application and around the openings as well as areas with high hydrostatic pressure should be checked more rigorously by hand.

This report summarizes the work performed during and the results obtained from the finite element analysis of the hull structure of the center test bed of the Amphibious Cargo Beaching Lighter. This analysis focused solely on the evaluation of the pontoon stiffened plate under the design loading conditions.

The connectors (R1, R2 and PC1) were designed based on hand calculations and were not part of this analysis task. Also, additional hand calculations beyond this task were performed for the design of the hull structure stiffeners and local deck areas around openings. As such, this report should be viewed as a part of the total analysis and design of the complete test bed and will be, therefore, included as an appendix to the overall project final report which will cover all aspects of analysis and design.

The structure analyzed was that of the center test bed. Results for the center test bed are applicable to the raked test bed.

The report is organized into two volumes:

- Volume 1 contains the text of the report and summary findings that control the design.
- Volume 2 contains additional detailed plots, extensive element stress summaries, supporting calculations and electronic files of the computer model and post-processing computer programs which were explicitly written for this analysis.

Section 2
Objectives

The primary objectives of the hull finite element analysis were:

- ensure the global structural adequacy of the test bed (strength and buckling),
- identify any potential weak points and make recommendation for improvements, as applicable, and
- define the plate make-up of the structure in terms of weight optimization.

The center test bed consists of two side pontoons and one middle pontoon connected side by side via four pontoon to pontoon connectors (PC1) per each side. There are two side configurations for the center test bed, the R1 side pontoon and the R2 side pontoon, reflecting the associated type of rigid test bed to test bed connector. The middle pontoon is attached to the two side pontoons in identical manner along each side. Figure 3-1 shows the complete center test bed assembly.

The middle pontoon is an 8 ft wide by 8 ft deep by 40 ft long box-type plated structure with longitudinal angle stiffeners and transverse framing made of plates or structural shapes at 3 ft to 4 ft intervals. At approximately one-third of the 40 ft length from each end are watertight bulkheads. The side pontoons are of similar construction except that they have housings for R1 and R2 type connectors at the two ends, respectively, and R1 type side connector at mid length.

The center test bed assembly can be connected to a raked test bed at each end to complete the entire beaching lighter assembly unit. A complete description of the structural system and its assembly operation can be found in the project Design Basis.

For analysis efficiency purposes, the model analyzed in this task reflected the longitudinal half part of the test bed. The half containing the R1 side pontoon was chosen as it is considered structurally more critical because of the large opening (pocket) cut into the pontoon to house the connector. The real test bed configuration has R1 connector on one side and R2 on the other. However, the global connector load on the test bed doesn't vary whether R1 or R2. Therefore, from the loading point of view the model is adequate. Stress distribution obtained at the R2 longitudinal end of the model was taken into consideration in the plate design of the side R2 area.

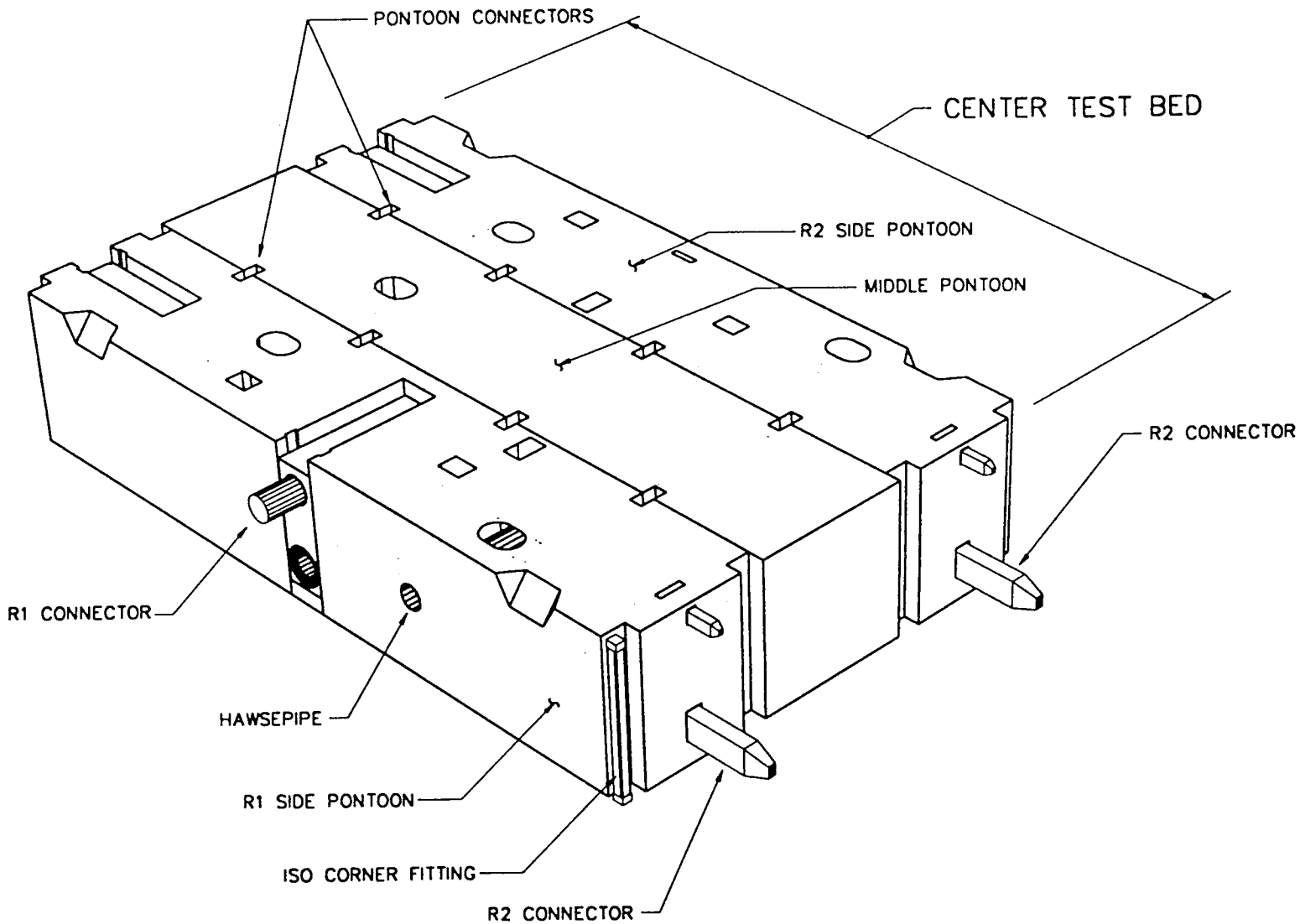

Figure 3-1
Center Test Bed Assembly

Initially, the various plate thicknesses making up the hull structure were estimated based on hand calculations. This plate make-up was used in the finite element model in the first analysis. This Preliminary Analysis and associated results constituted the primary hull plate design phase.

Following the results of the Preliminary Analysis the computer model was updated to reflect the revised plate thicknesses, as applicable, and a Final Confirmatory Analysis was made to ensure that the revised structure was adequate in terms of plate thickness and stiffener configuration.

The finite element analysis was performed using the general purpose Structural Analysis Program SAP90 (Version P5.4, Computer & Structures, Inc.). Two of the available SAP90 element types were utilized:

- the frame element (beam-column type element) and
- the shell element with both membrane and bending stiffness capabilities.

All longitudinal and transverse stiffeners were represented by frame elements, and most of the plates were represented by shell elements except for a small number of plates in the transverse frames which were treated as beams (frame elements). In general, all main hull components such as the housings for the R1, R2 and PC1 connectors as well as miscellaneous openings in the deck and side walls were included in the model.

Only one longitudinal half of the center test bed structure (one full side pontoon and one half middle pontoon) was modeled since the test bed is basically an axisymmetrical structure with respect to global loading application (an explanation of the axissymetric assumption used in the analysis was given in Section 3). Figures 5-1 and 5-2 show two isometric views of the full computer model, looking inboard and outboard, respectively.

The origin of the coordinate system was located at the lower bottom corner where the outmost edges of the R1 connector housing block intersect. The positive X-axis is pointing longitudinally toward the R2 end, the positive Y-axis is pointing toward the middle pontoon, and the positive Z-axis is pointing up vertically. A consistent set of units (inches and kips) was used throughout the analysis.

The line of symmetry is the longitudinal center line of the middle pontoon. All nodal points in the vertical plane passing through this line were made boundary nodes. The symmetric boundary conditions were such that the combined behavior of boundary nodal restraints was axisymmetric. In this case, the transverse (Y) displacement was fixed at the boundary nodes while the longitudinal (X) and vertical (Z) were free. Similarly, the rotations about the X and Z axes were restrained while rotation about the Y axis was free.

In order to maintain stability of the structure in the X and Z directions, two nodal points were strategically chosen to provide supports in the X and Z (longitudinal and vertical) directions. These two points were located in the lower corners of the outer face of the side pontoon. The forces in these two nodes were monitored during the analysis to ensure that they would not result in erroneous boundary loads and were indeed found to be insignificant. With these nodal restraints and boundary conditions the test bed behaves as a floating vessel under the influence of a balanced set of external loads consisting of connector loads and net self weight. Local hydrostatic pressures and wave loads on the pontoon were not considered.

Figure 5-3 shows the boundary conditions. Figures 5-4 through 5-8 are computer model plots of the outer shell longitudinal portions of the hull including the plate thicknesses used in the Preliminary Analysis (initially determined by hand calculations). Figures 5-4 and 5-5 show the deck and bottom plate, respectively. Figures 5-6 and 5-7 show the longitudinal side walls of the R1 side pontoon and Figure 5-8 shows the longitudinal side wall of the middle pontoon. Additional detailed plots of the model can be found in Volume 2.

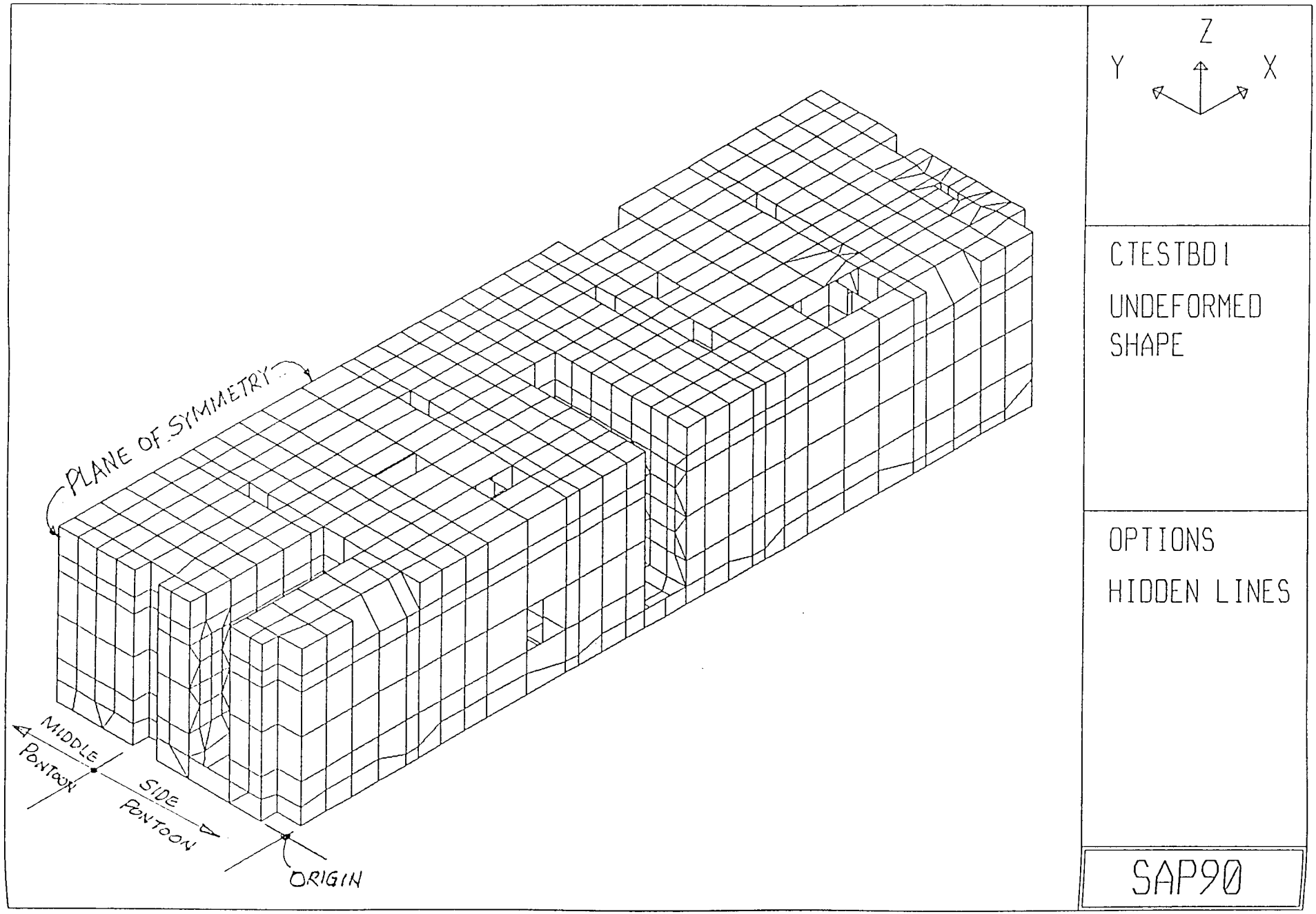

Figure 5-1
Overall Computer Model (Outboard View)

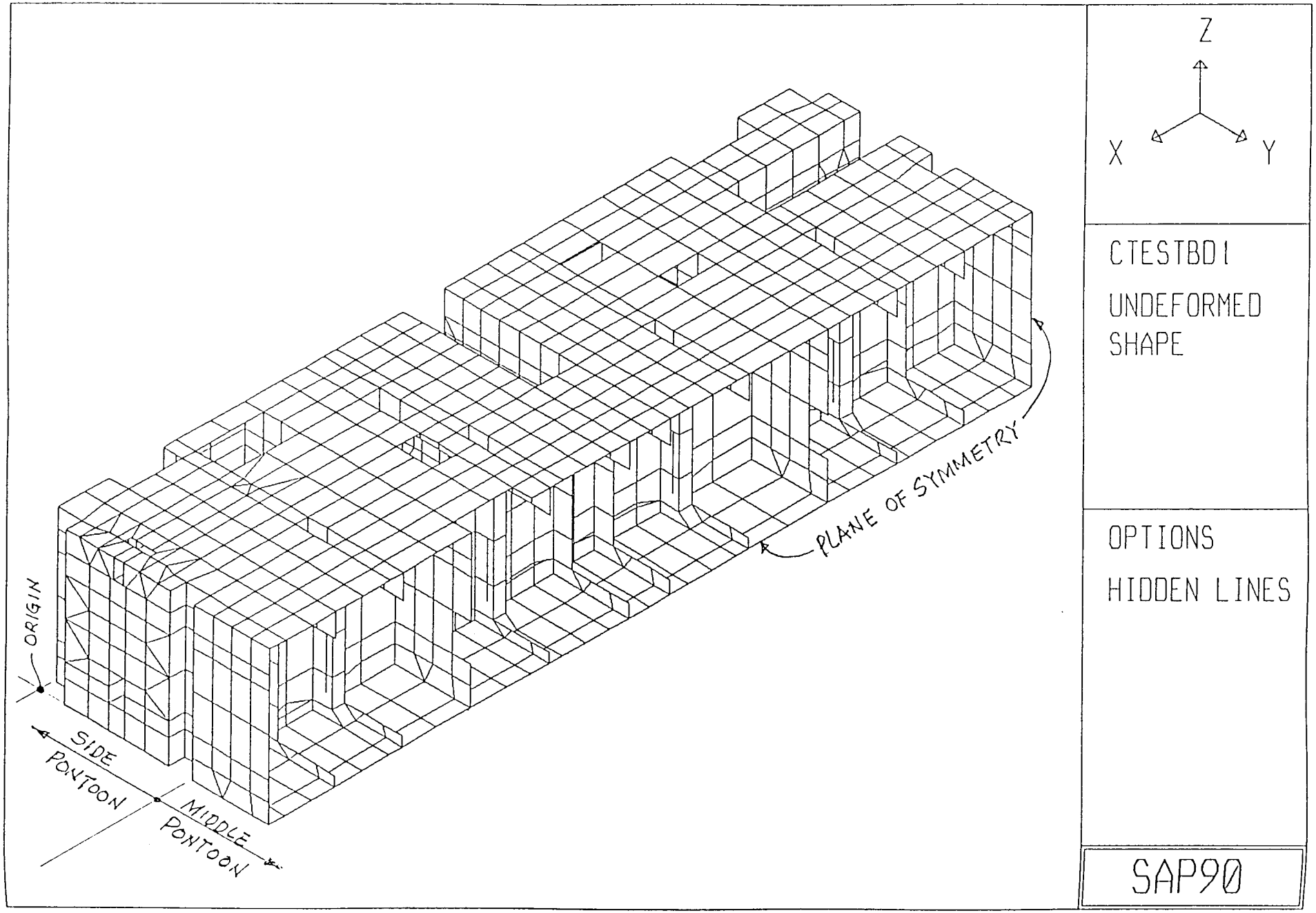

Figure 5-2
Overall Computer Model (Inboard View)

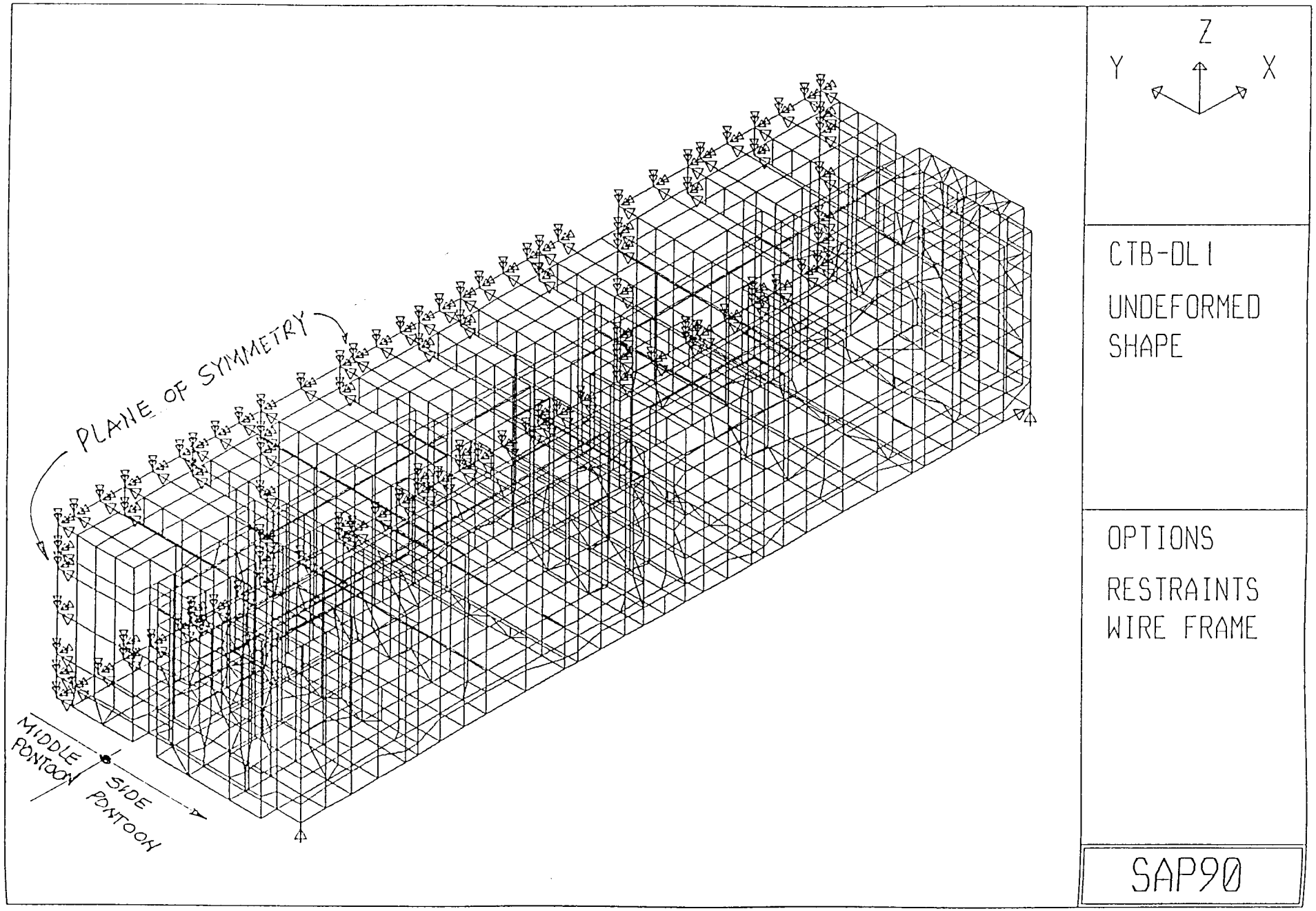

Figure 5-3
Overall Computer Model Boundary Conditions

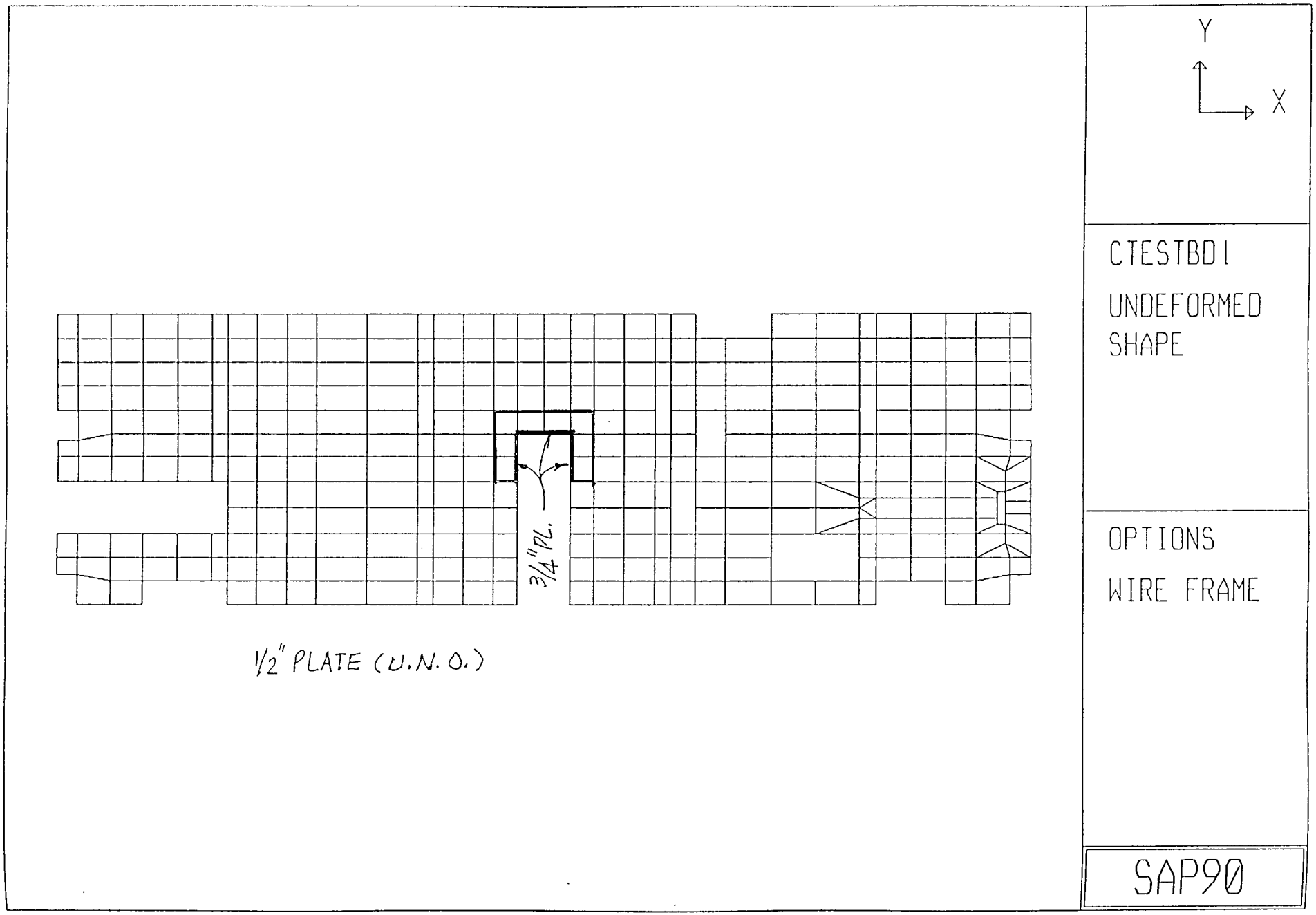

Figure 5-4
Computer Model, Deck Plate

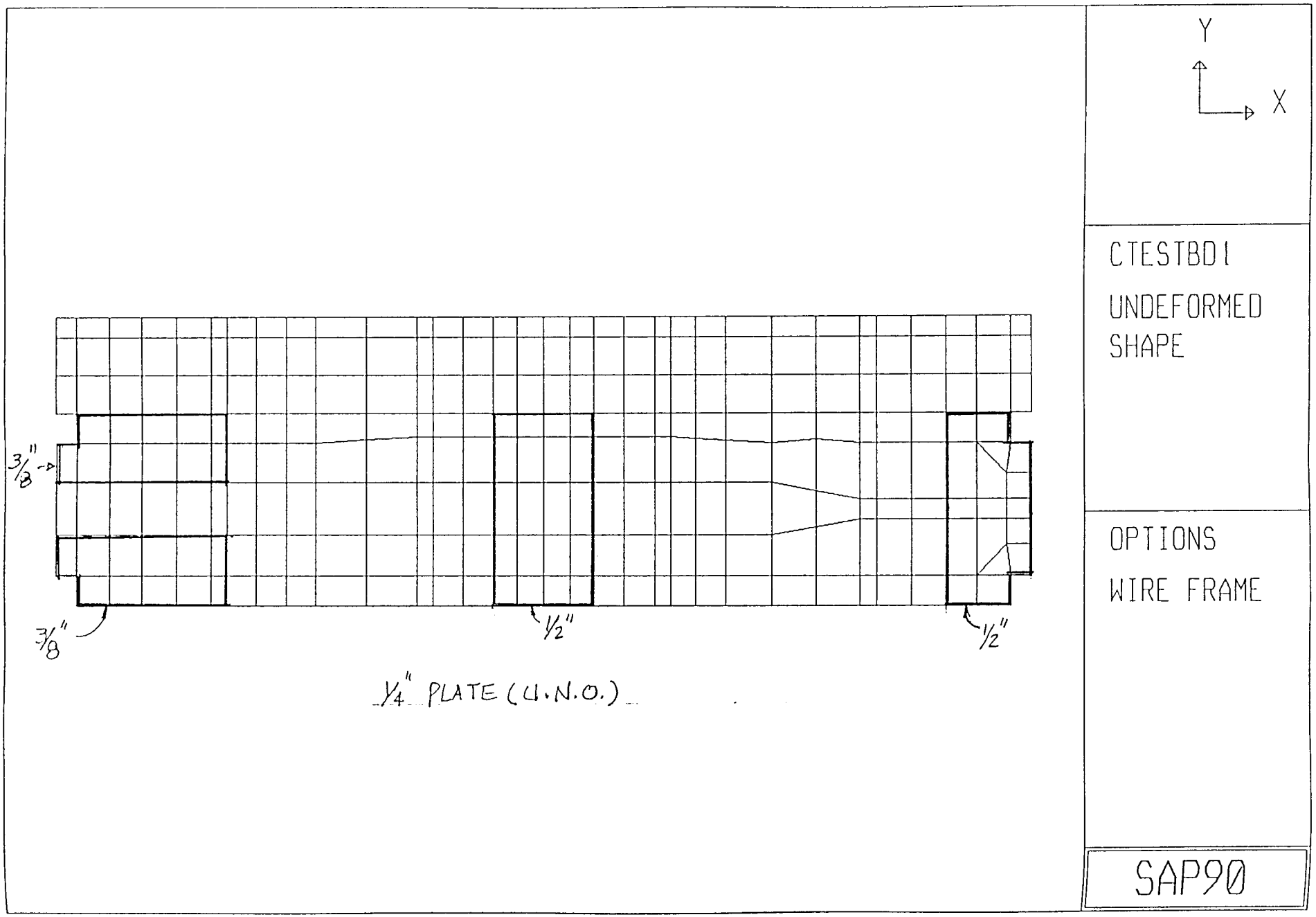

Figure 5-5
Computer Model, Bottom Plate

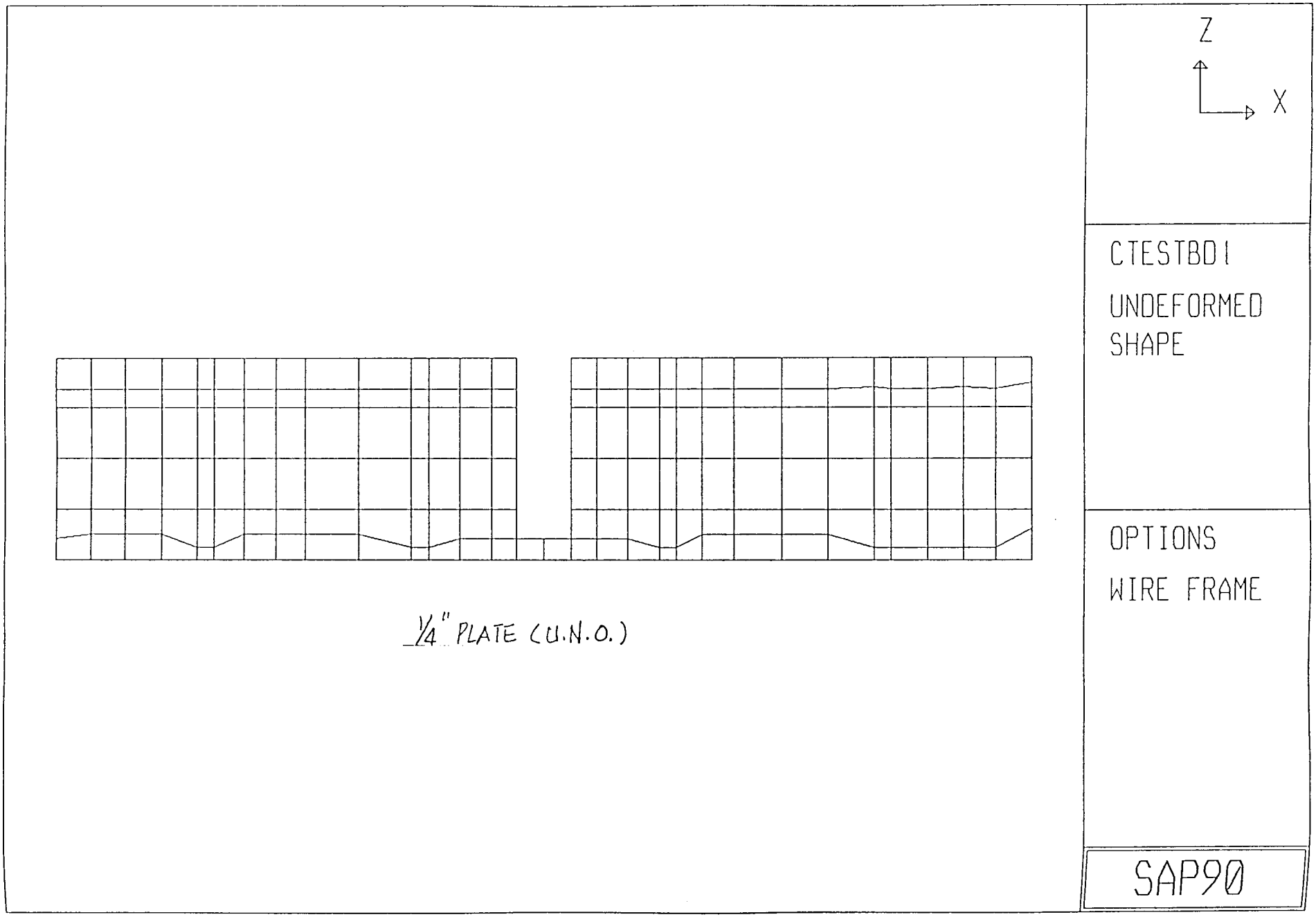

Figure 5-6
Computer Model, Side Pontoon Outer Side Plate

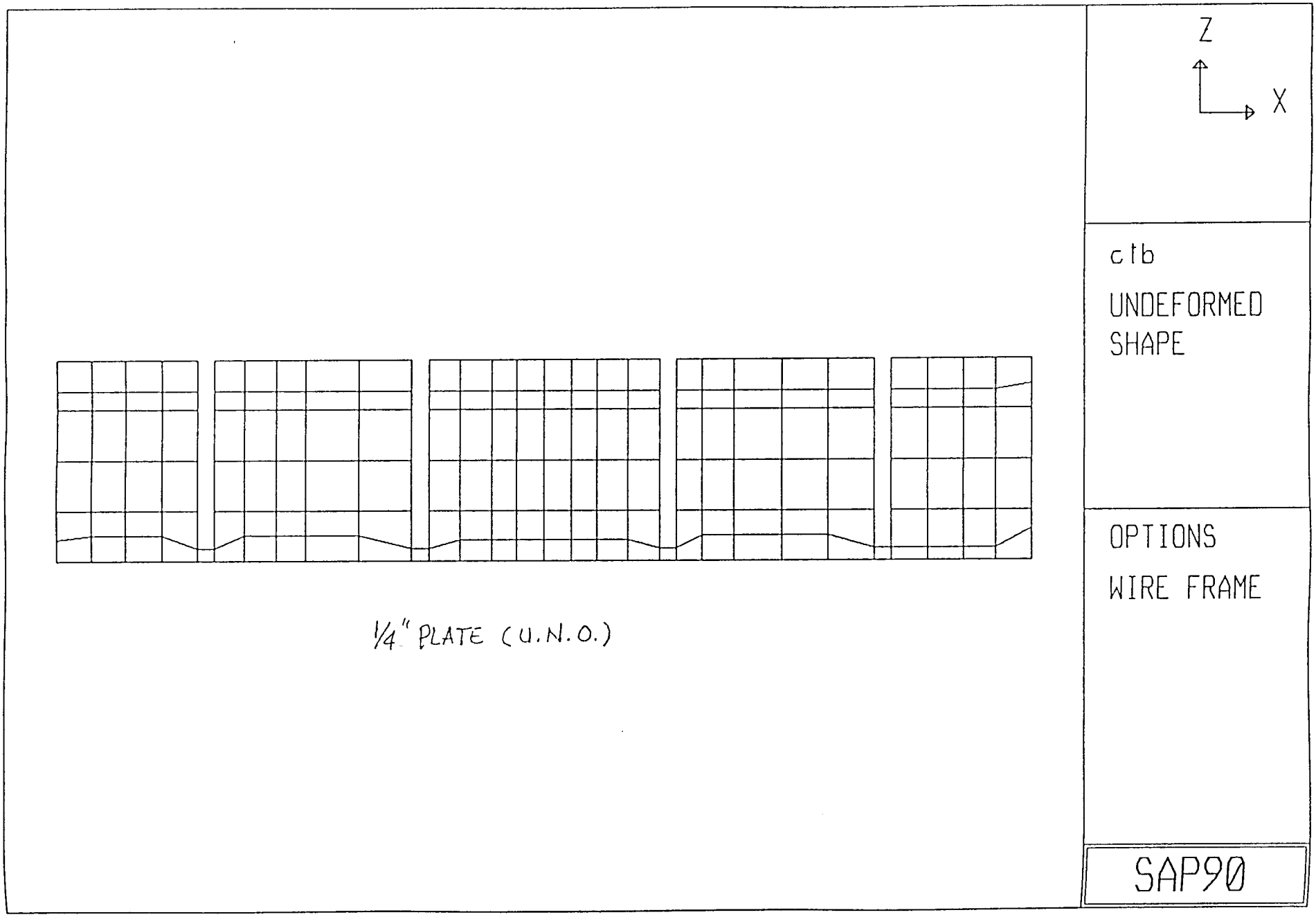

Figure 5-7
Computer Model, Side Pontoon Inner Side Plate

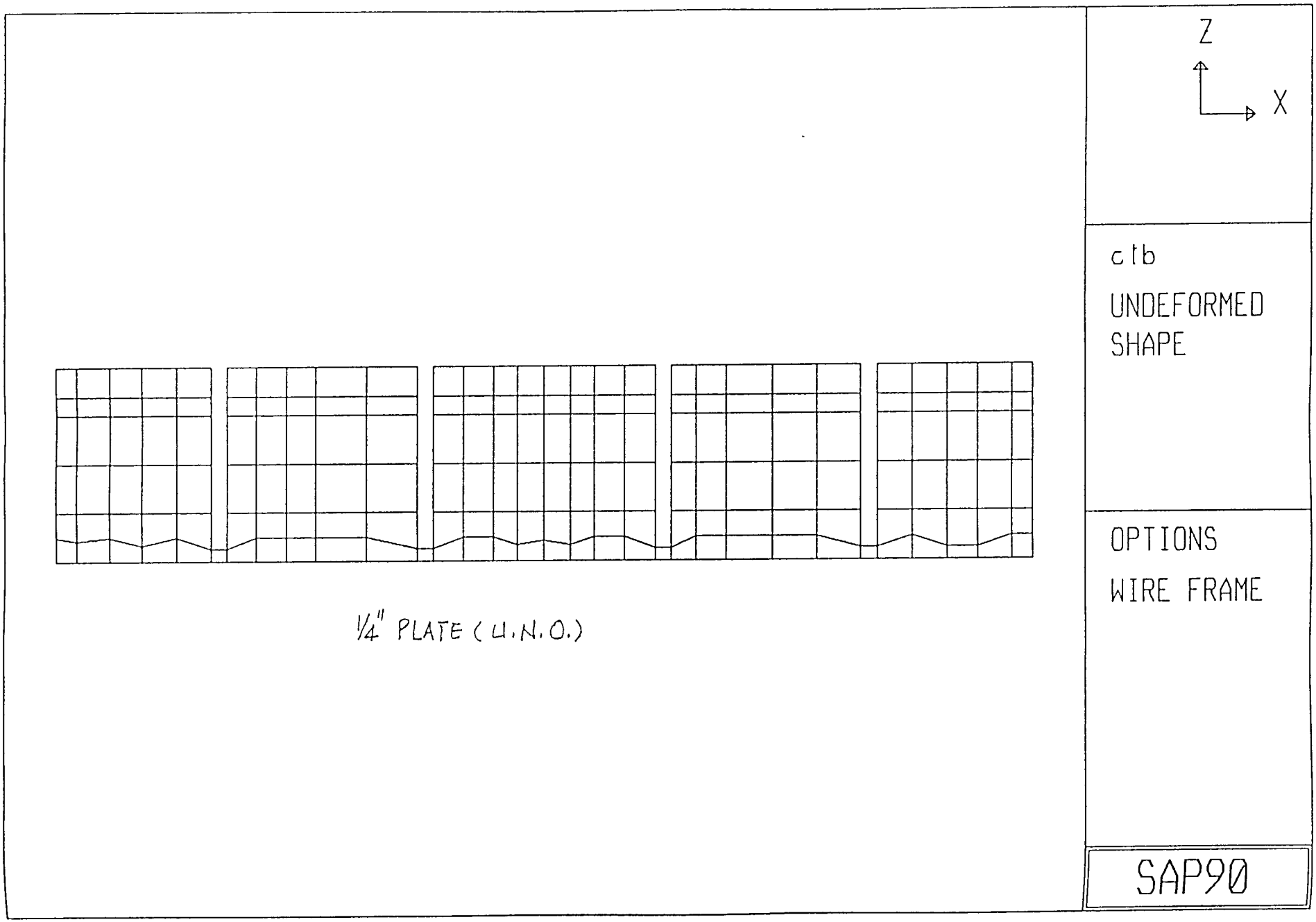

Figure 5-8
Computer Model, Middle Pontoon Side Plate

The design loads used in the analysis were extracted from the Design Basis reflecting Seastate 5 (survival) conditions.

The maximum test bed moment applied at any one end connector (R1 or R2) was assumed equal and opposite to that applied at the other end. These moments acting at the interface of test beds were broken up into force couples and the forces were applied to nodes where the connectors exert load on the hull structure, namely where the bearing pads are located (top and bottom edges of pontoon) for compression, and at the appropriate points within the hull cavity housing of the connectors for tension. Because the loads were conservatively applied to the model concentrated on single nodal points, some fictitiously high local stresses were expected from the analysis. This fact was kept in mind when results were interpreted vis a vis high local (nodal) stresses.

The total shear force for each loading condition was equally divided between each connector end of the test bed and artificially balanced by scaling the generated dead weight of the test bed.

In all, eight individual loading conditions resulting in four loading combinations were analyzed, as follows:

<u>Loading Combination 1 consisted of these single loading conditions</u>:

- End moment causing compression in deck plates, M = 3,123 k-ft.
- Upward shear V = 67 kips (upward) at R1 and R2.

<u>Loading Combination 2 consisted of these single loading conditions</u>:

- End moment causing tension in deck plates, M = -3,123 k-ft.
- Downward shear V = -67 kips (downward) at R1 and R2.

<u>Loading Combination 3 consisted of these single loading conditions</u>:

- Moment at side R1 connector causing compression at deck plates, M = 1,500 k-ft.
- Upward shear V=32.5 kips (upward) at side R1 connector.

<u>Loading Combination 4 consisted of these single loading conditions</u>:

- Moment at side R1 connector causing tension at deck plates, M = -1,500 k-ft.
- Downward shear V=-32.5 kips (downward) at side R1 connector.

This Preliminary Analysis and associated results constituted the primary hull plate design phase. The computer model with plate make-up determined by preliminary hand calculations (as shown in Section 5 figures) was analyzed for the design loads specified in Section 6. Following the analysis, element stresses were reviewed and checked for both strength and buckling for the four loading combinations. Plate thicknesses were revised as necessary always keeping in mind weight optimization issues.

This analysis focused solely on plate thickness optimization for the hull; the plate thickness in the transverse frames and stiffeners were separately evaluated by detailed hand calculations not covered by this report.

7.1 STRENGTH CHECK

Plate strength requirements were checked against the Von Mises stress criterion. Because SAP90 does not automatically compute Von Mises stresses, a short post-processing program was written in MS QuickBasic (Version 4.5) that computed the Von Misses stresses from the element principal stresses in the SAP90 output. Detailed summaries of these stress values are included in Volume 2.

All Von Mises stresses were less than yield and most of them were relatively low. The only exception where stresses exceeded yield generally occurred at the deck in the immediate vicinity of the R1 and R2 connectors (shown in Figure 7-1). This also reflected the conservatism of applying concentrated nodal loads and the fact that the plate thickness in this area was assumed in the model to be only 0.5 inches. Local plate thickness increase in this area was recommended and was determined by hand calculation, thus resolving this isolated problem.

7.2 BUCKLING CHECK

Following the strength check a plate buckling check was made. Plate buckling was checked against API Bulletin 2V (BUL 2V), “Bulletin on Design of Flat Plate Structures” recommendations. This reflects a “design by analysis” approach to structural design of offshore structures.

This code assumed that plate thickness is small compared to other plate dimensions, and the plate between stiffeners is simply supported on all sides. The stress calculation conforms to small deflection theory. The buckling check was made for serviceability limit state under which failure is when a member no longer satisfies functional requirements. Sections of plate between stiffeners were checked for compression in the two orthogonal directions, edge shear as well as interaction of biaxial compression and edge shear.

Because of the large number of elements to check and the relative complexity of the checking process, the procedure outlined in BUL 2V was coded and automated using MS QuikBasic. For each element checked, this QuickBasic postprocessor read element longitudinal, transverse and shear stresses from the SAP90 output for each of the loading combinations, and performed the buckling calculations for the plate thickness used in the analysis model. If the interaction equation was not satisfied it changed the plate thickness by 0.0625 inches and repeated the calculations until a satisfactory plate thickness was found.

Not every single element in the model was checked. The elements selected for evaluation were primarily in the high stress areas with a number of elements in the less stressed areas judiciously selected. The summaries of Von Mises stresses were utilized to select elements for buckling check. The results are summarized in Section 7.3.

7.3 PLATE THICKNESS OPTIMIZATION

This section outlines the main conclusions from the strength and buckling check. The pontoon deck and bottom plate thicknesses used in the preliminary model were generally conservative and can be reduced except for areas of local load application and around large openings. These areas need to be thickened or reinforced. Nominally, the deck and bottom plates can be reduced to 0.25 inches for the side pontoons. The bottom deck of the middle pontoon can be 0.1875 inches based on buckling alone, however, it is still required to be 0.25 inches for hydrostatic loads. Figures 7-2 and 7-3 show the recommended plate make-up for the deck and bottom plates of the test bed.

The side walls of the pontoons required an additional row of longitudinal stiffeners at approximately 1 ft from the bottom. With this additional stiffener a 0.1875 inch plate is adequate for the outboard wall of the side pontoon and for the middle pontoon walls for both buckling and lateral pressure. This is nominally applicable also for the inboard wall of the side pontoon except locally around the PC1 connectors. However, note that in the final design the local connector force distribution is done with hand calculations resulting in local insert plates as opposed to bands of 0.25 inch plate indicated here. Figures 7-4 through 7-6 show the requirements for the pontoon side walls.

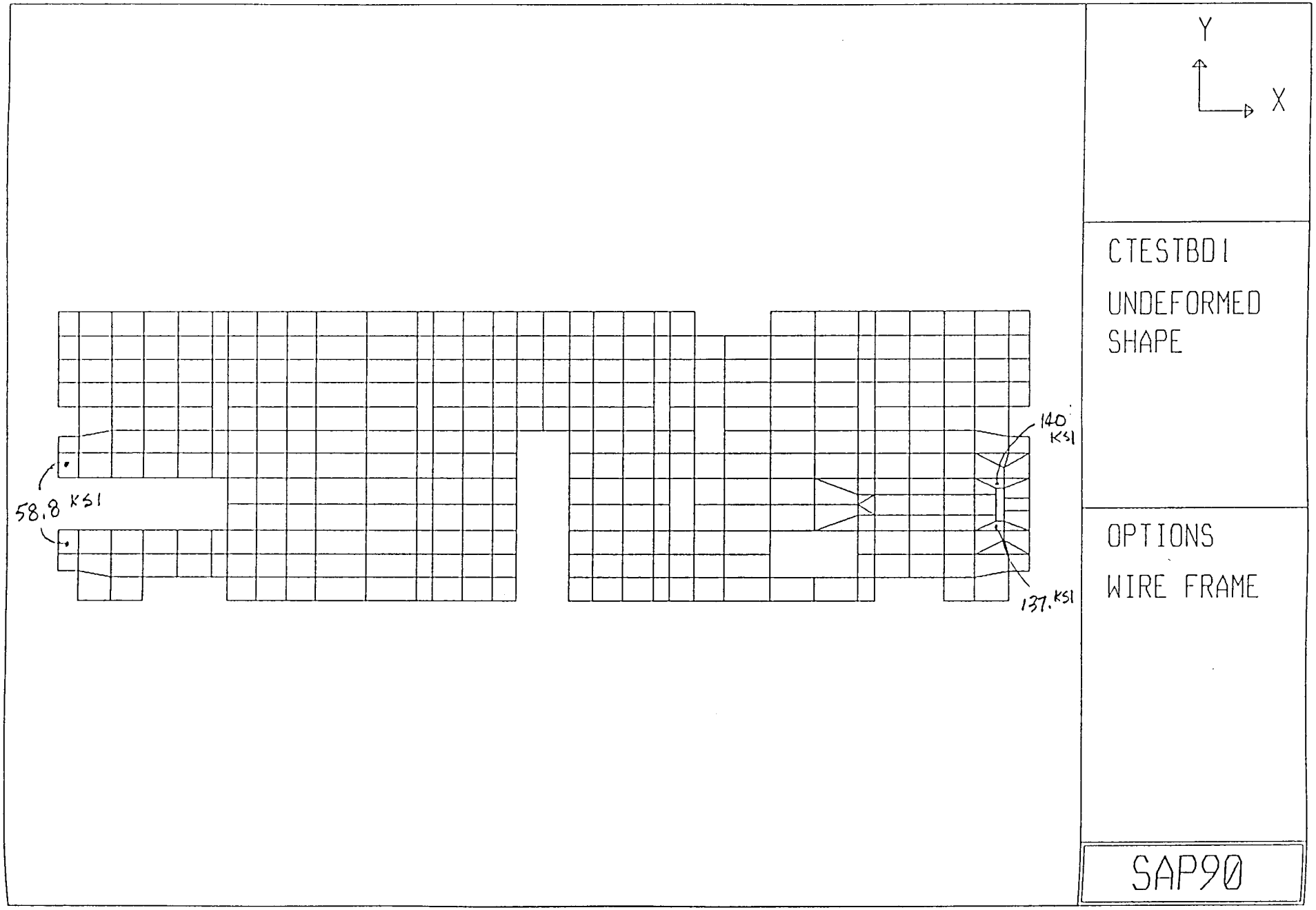

Figure 7-1
Strength Check, Areas with Von Mises Stress Exceeding Yield

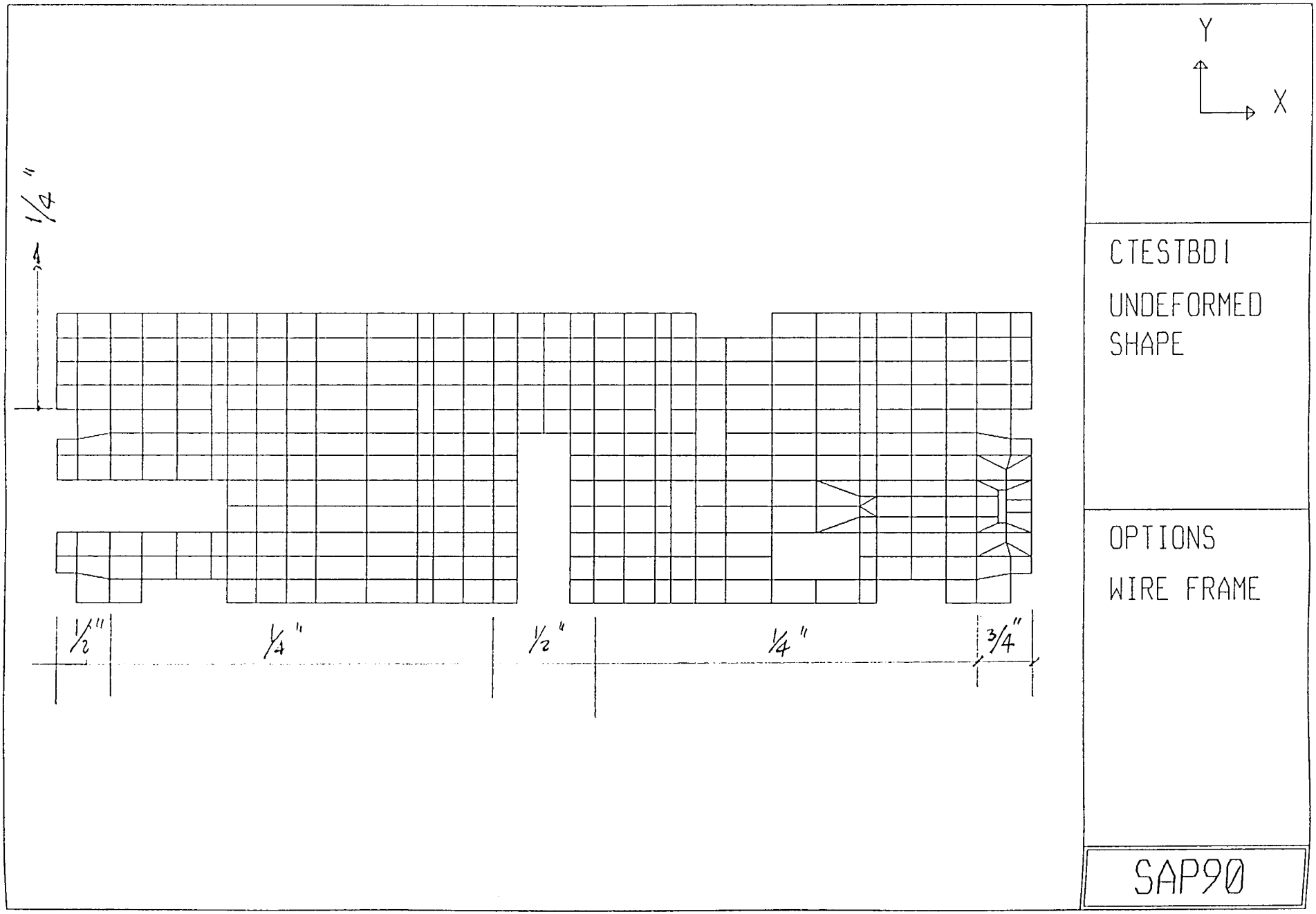

Figure 7-2
Deck Plate Thickness Summary

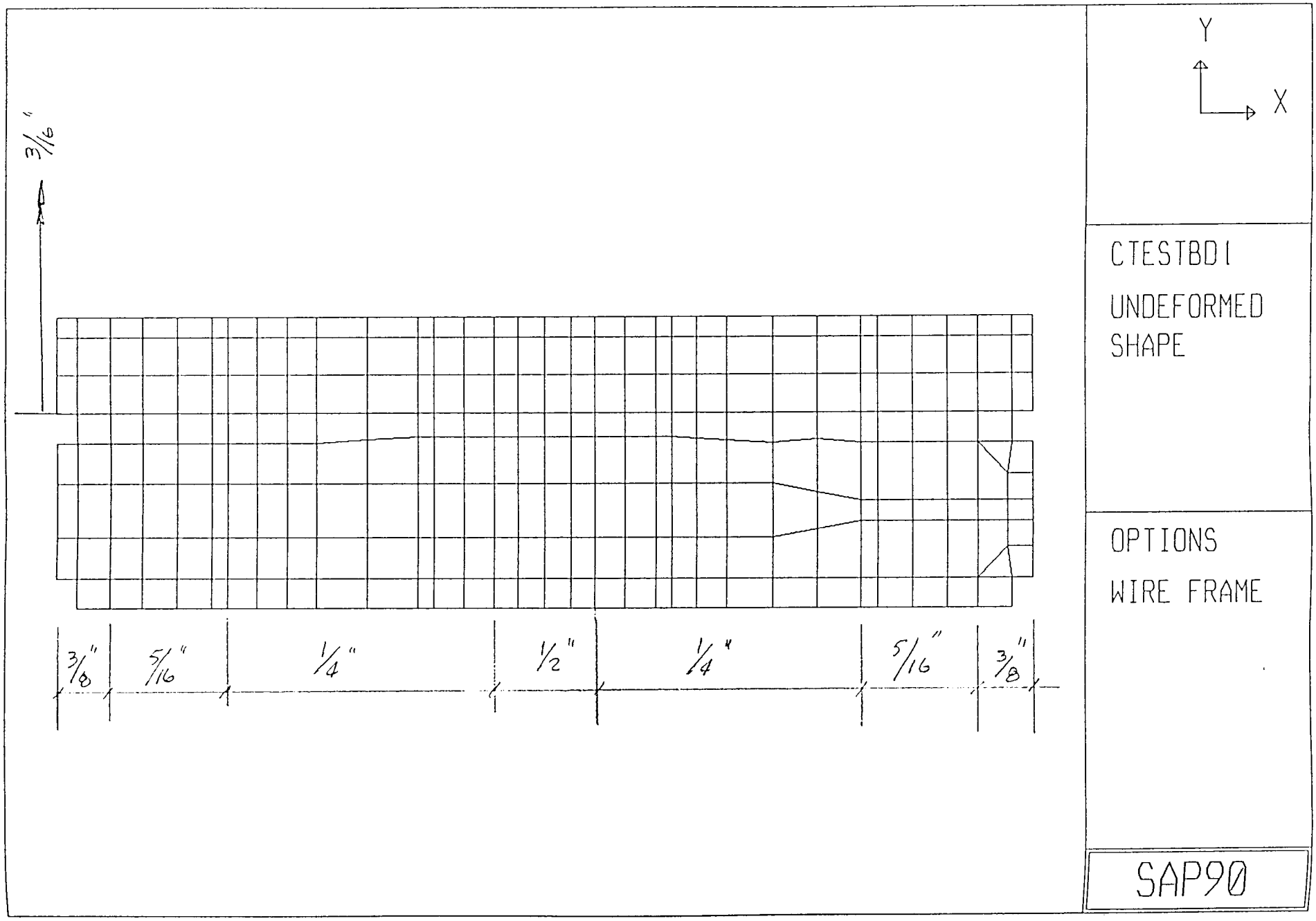

Figure 7-3
Bottom Plate Thickness Summary

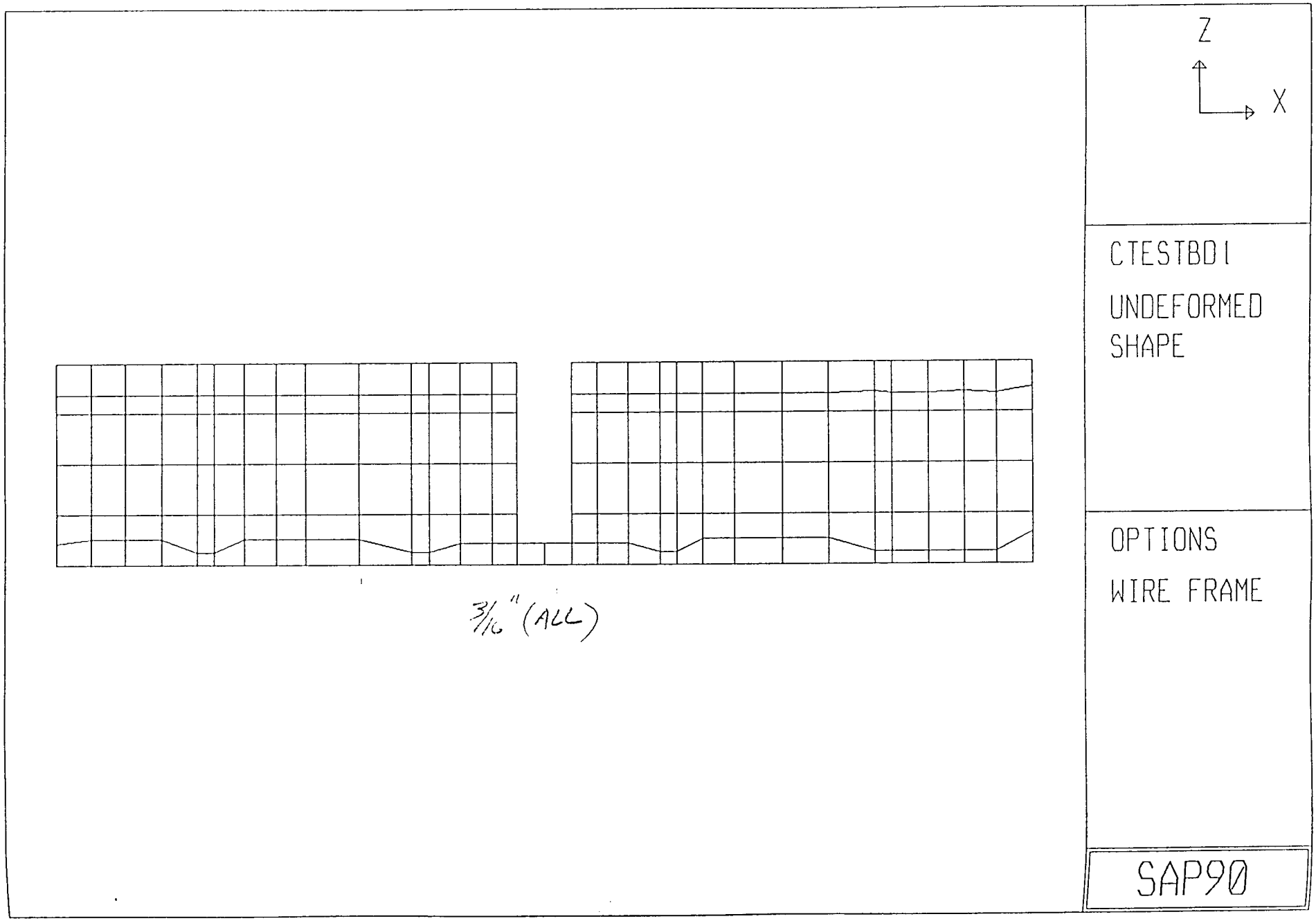

Figure 7-4
Side Pontoon Outer Side Plate Thickness Summary

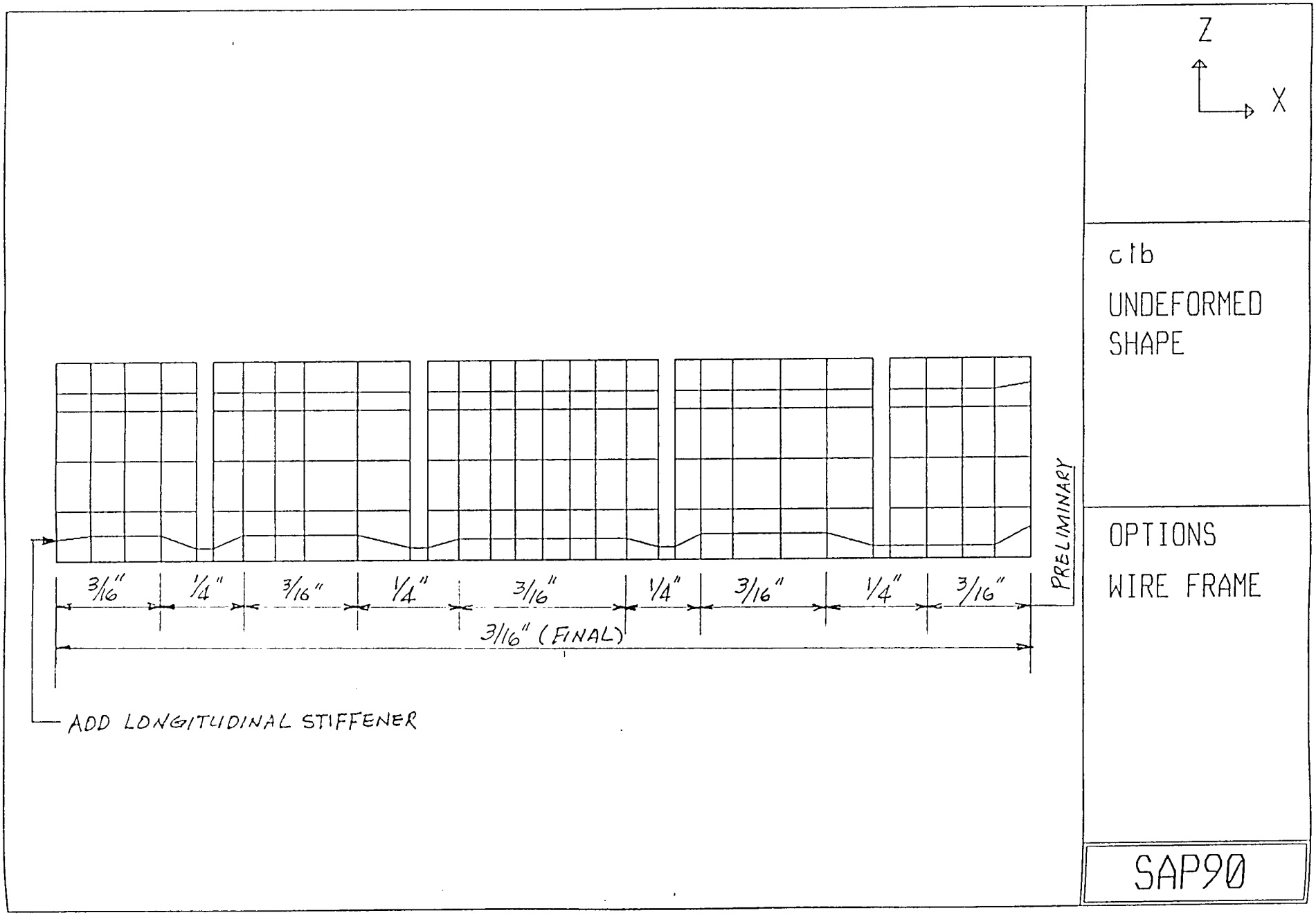

Figure 7-5
Side Pontoon Inner Side Plate Thickness Summary

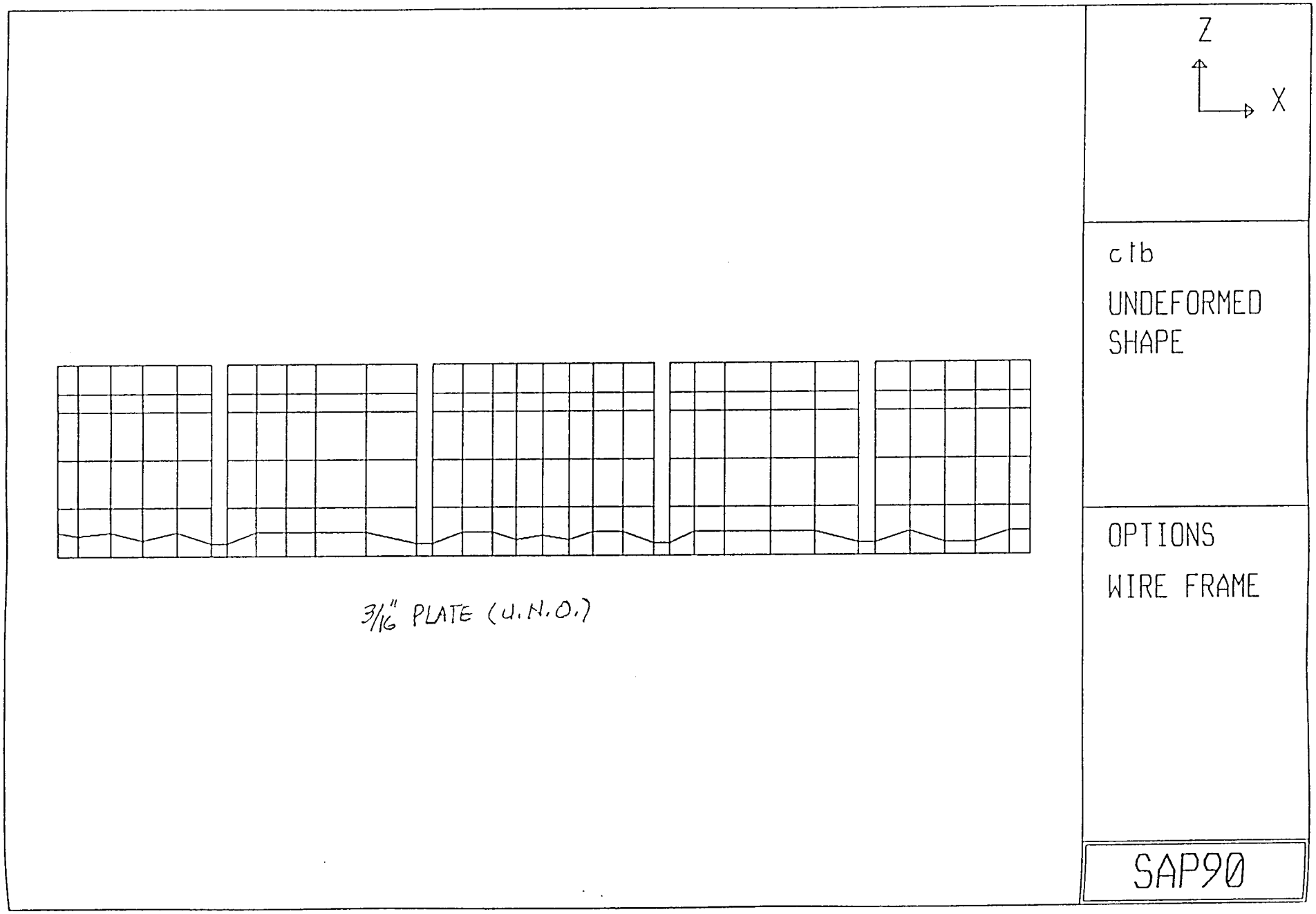

Figure 7-6
Middle Pontoon Side Plate Thickness Summary

8.1 COMPUTER MODEL

The optimized plate thicknesses summarized in Section 7.3 were incorporated in the final analysis computer model for confirmation check. Additionally, due to a change in the PC1 connector, the side connector slots were filled with plate (all 0.1875 inches thick) providing a continuous surface between the middle and side pontoons.

Figures 8-1 through 8-8 show views of the final computer model including the modifications resulting from the new PC1 connector, namely elimination of slots for PC1.

8.2 RESULTS

The finite element analysis was repeated (all loading combinations) using the updated computer model. Following the analysis, the process of strength and buckling check was also repeated. Similar to the preliminary analysis, the high stress areas occurred at the points of load application as expected. The revised plate thicknesses were found to be satisfactory except for one case in the bottom slab at the R1 end connector where the 5/16” plate needed to be extended another 12 inches toward the middle of the pontoon.

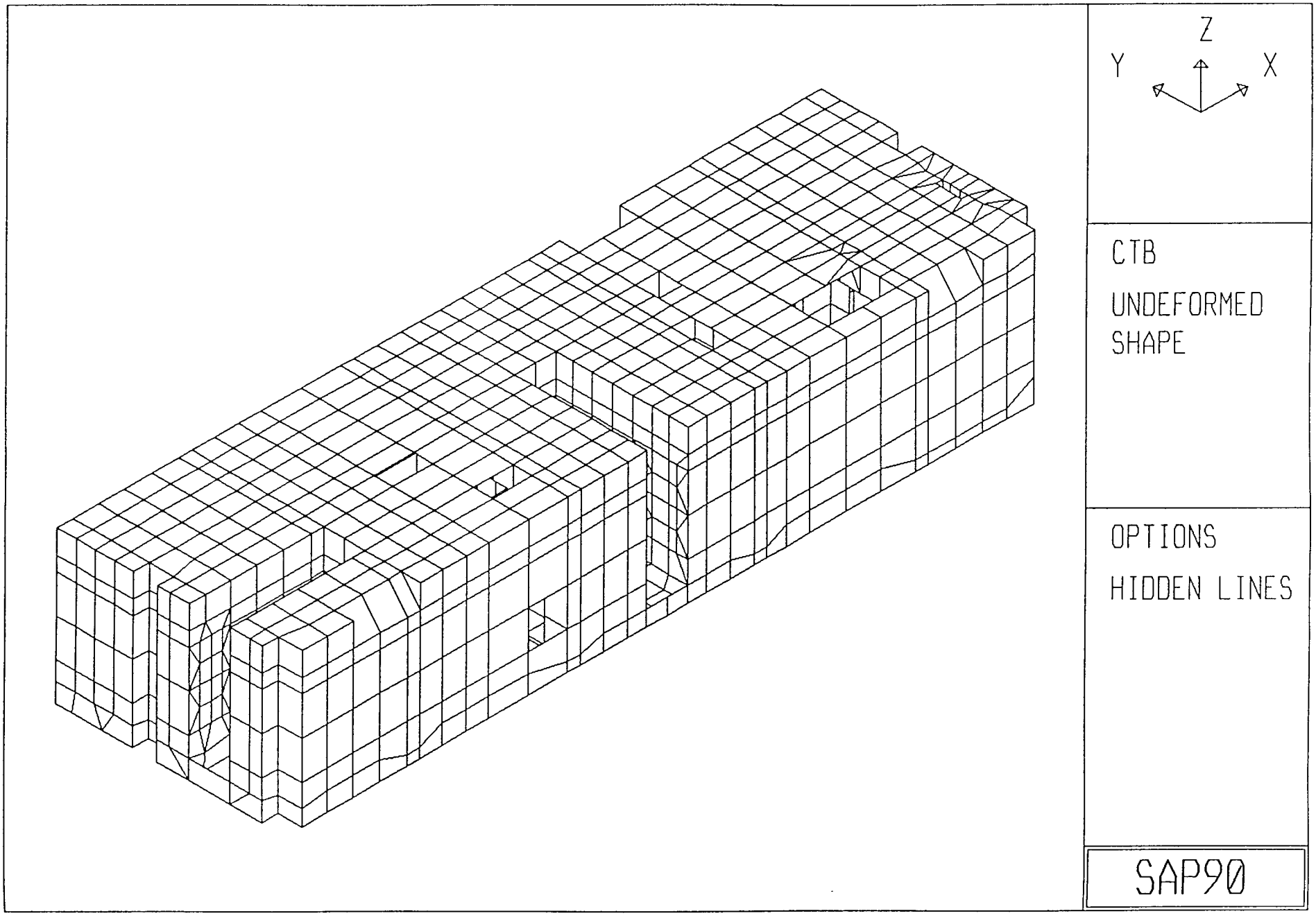

Figure 8-1
Overall Final Computer Model (Outboard View)

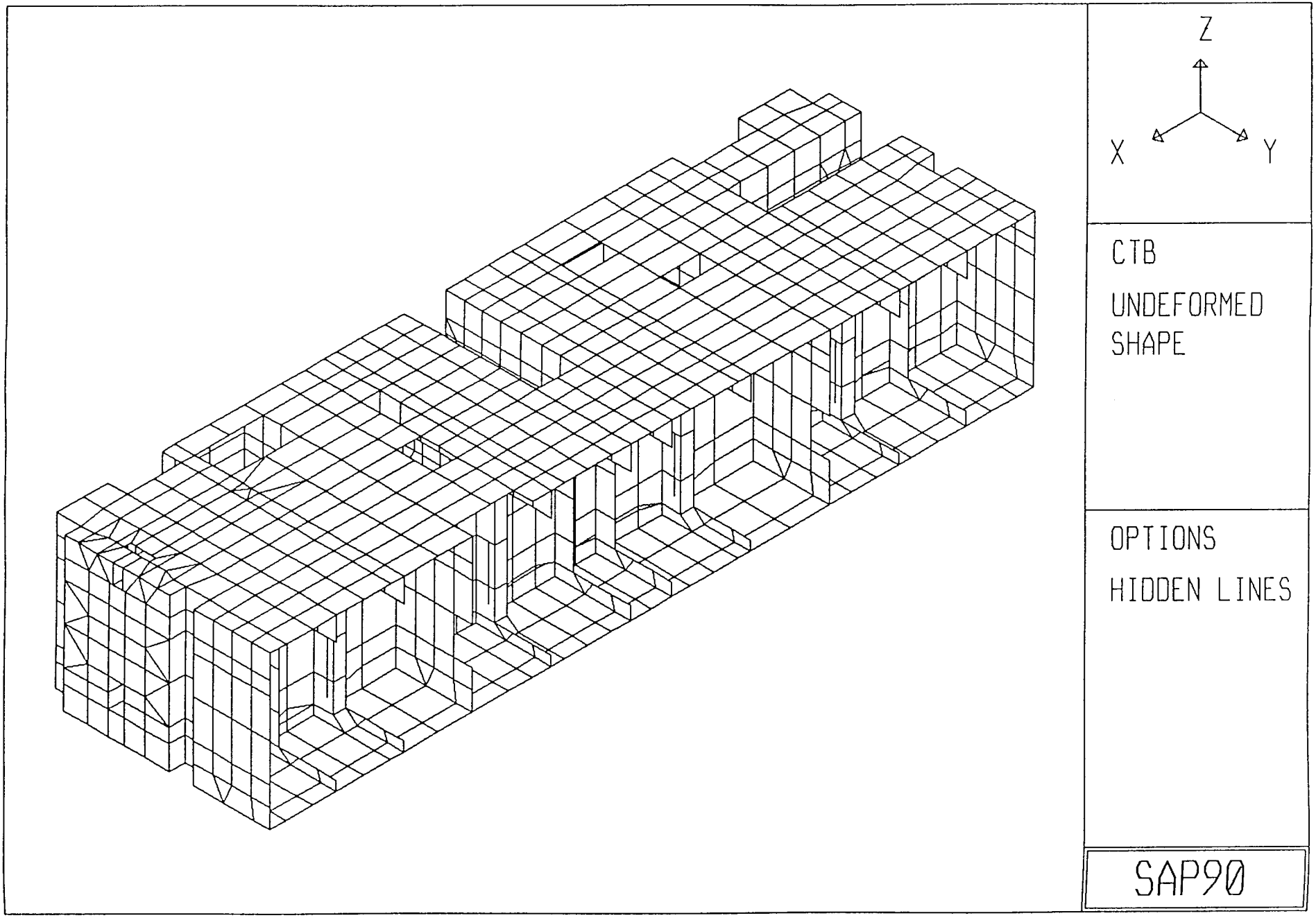

Figure 8-2
Overall Final Computer Model (Inboard View)

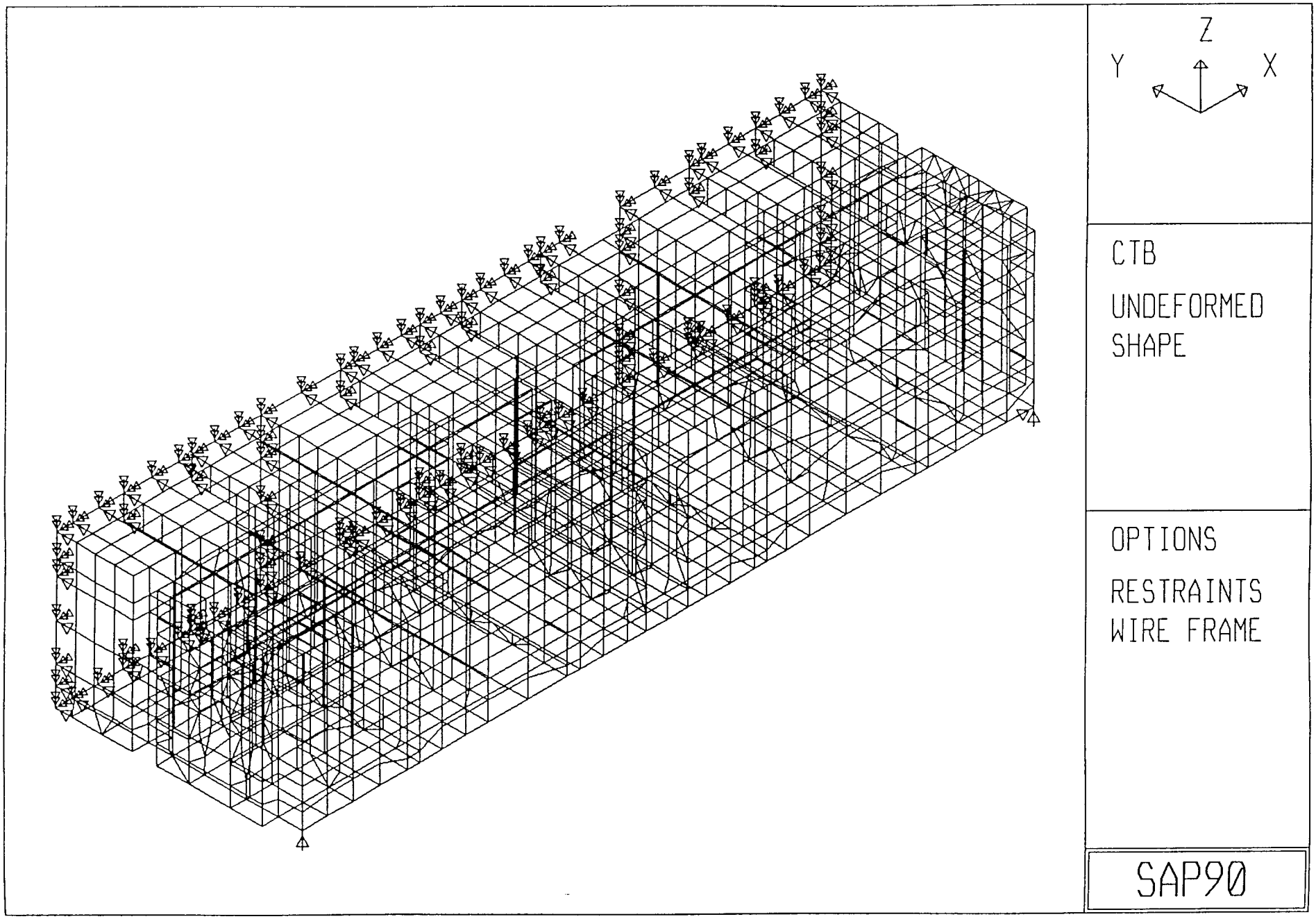

Figure 8-3
Overall Final Computer Model Boundary Conditions

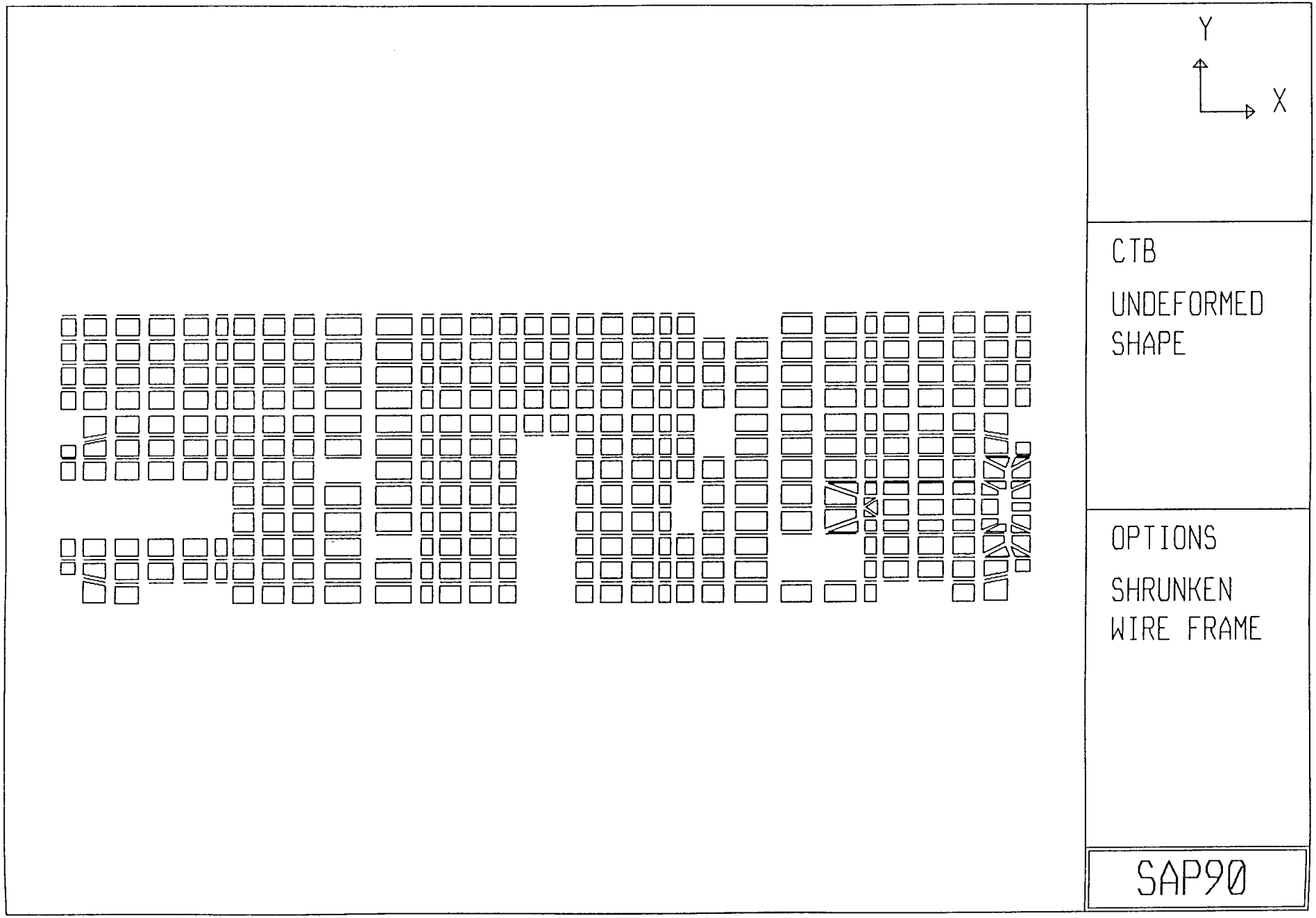

Figure 8-4
Final Computer Model, Deck Plate

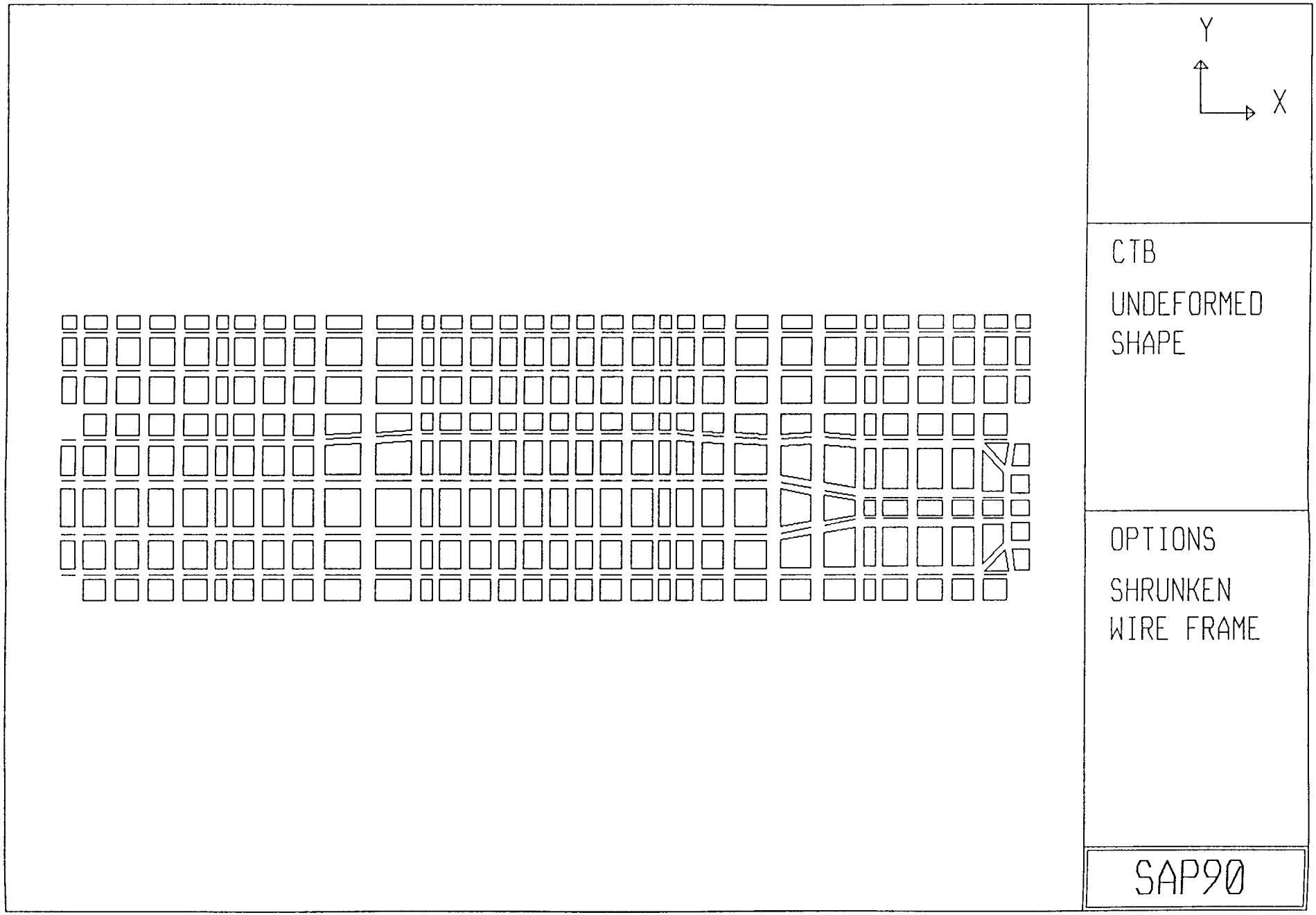

Figure 8-5
Final Computer Model, Bottom Plate

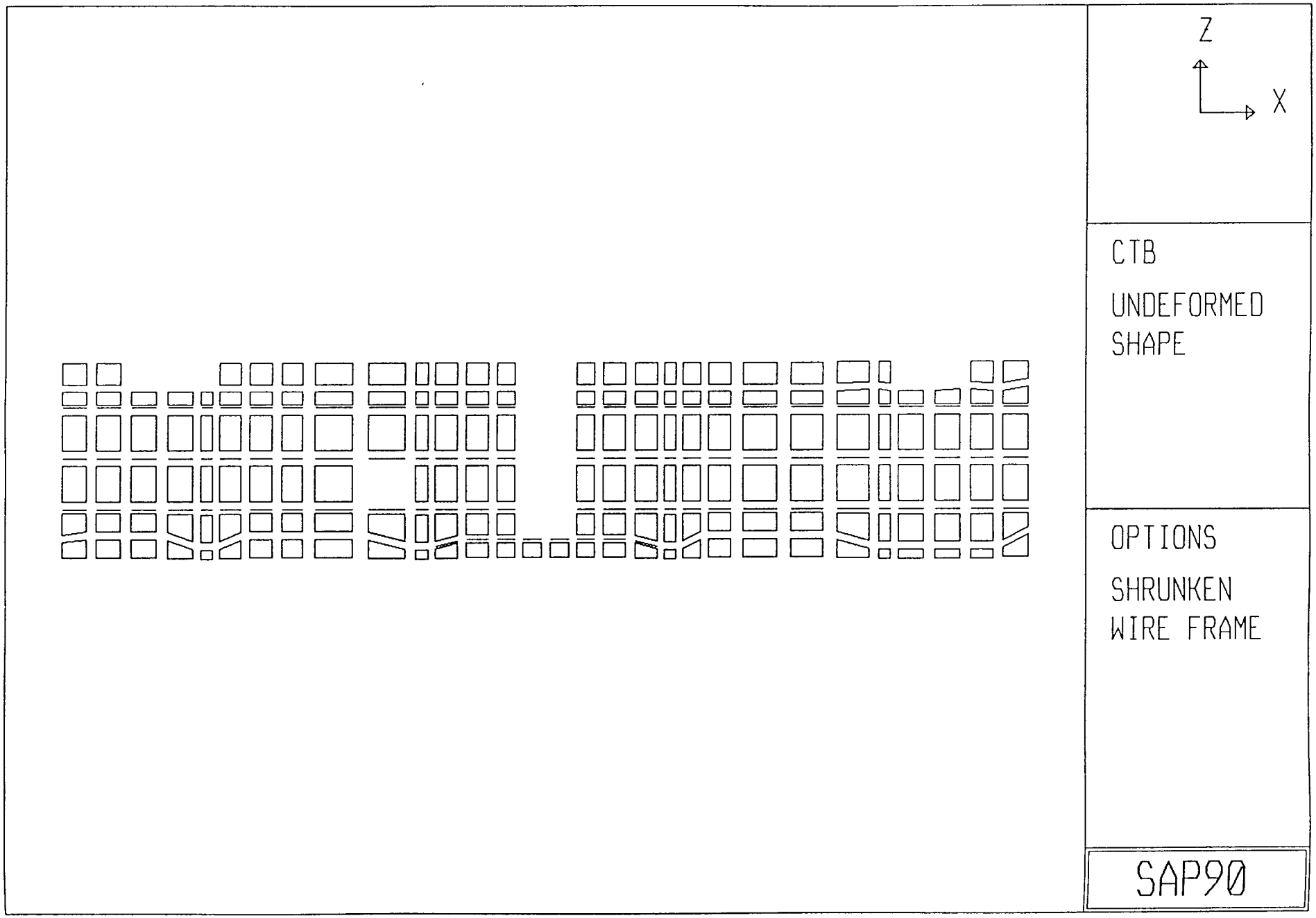

Figure 8-6
Final Computer Model, Side Pontoon Outer Side Plate

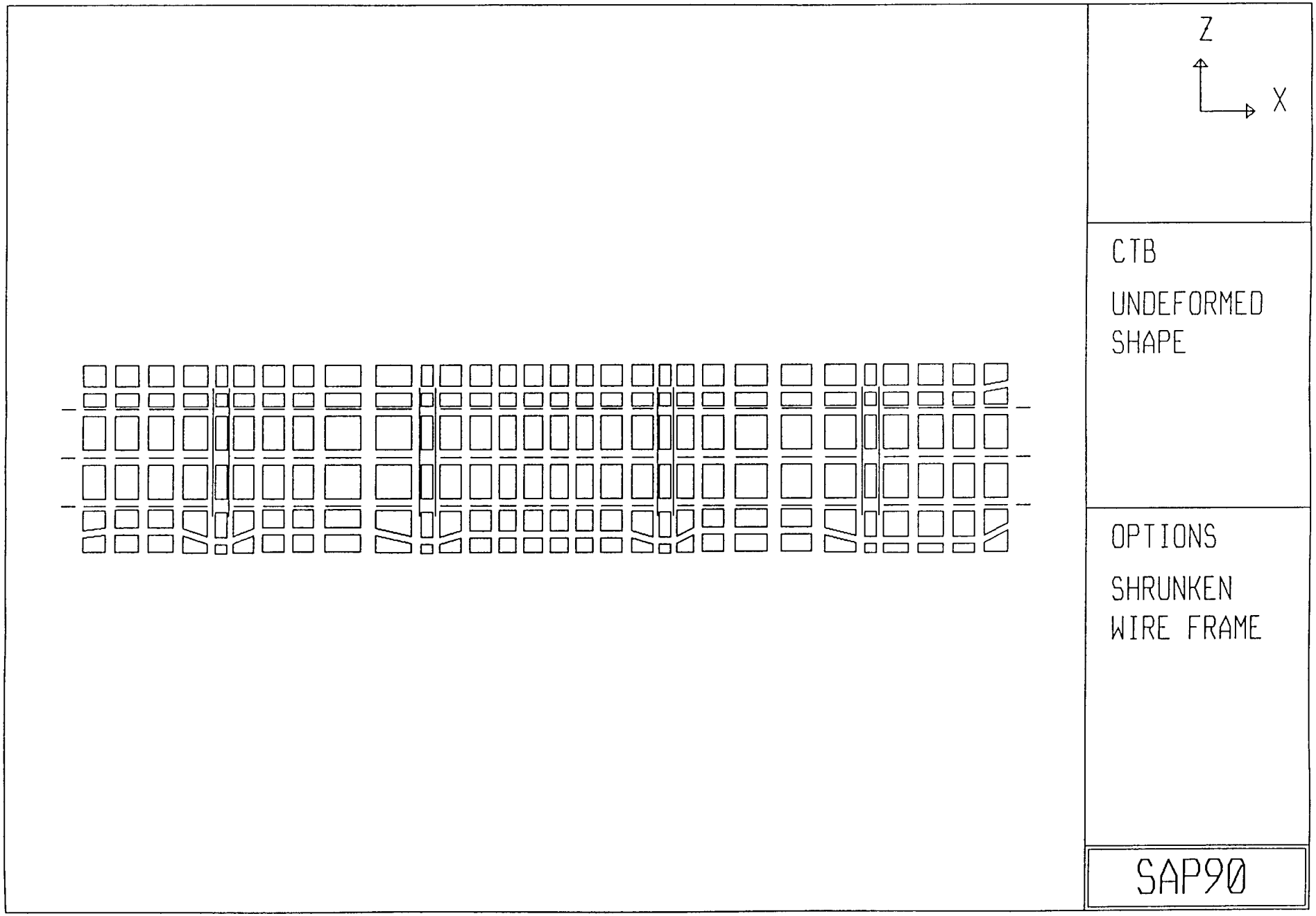

Figure 8-7
Final Computer Model, Side Pontoon Inner Side Plate

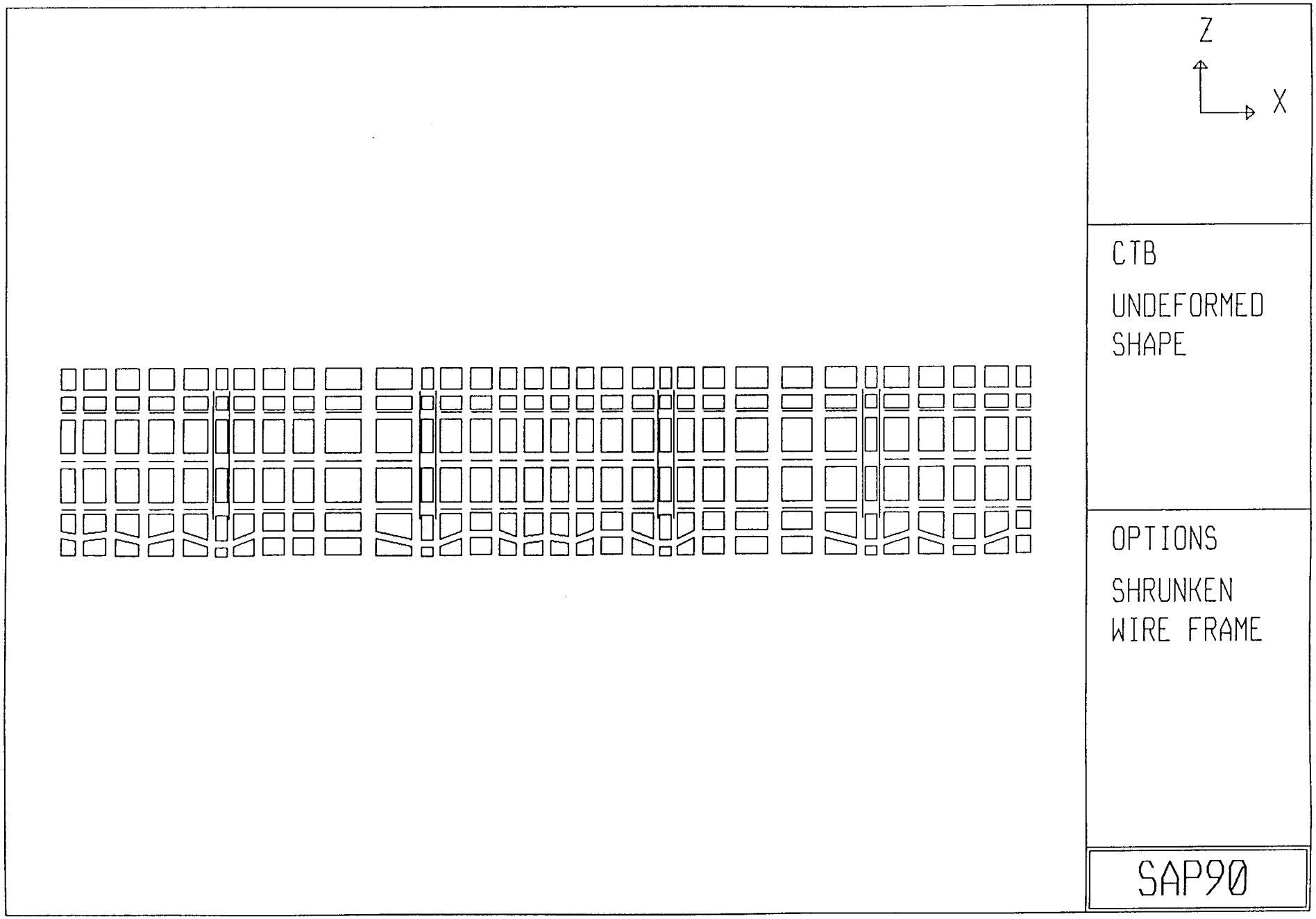

Figure 8-8
Final Computer Model, Middle Pontoon Side Plate

As indicated in Section 8.3 the final plate thicknesses are adequate for strength and buckling with respect to global stability of the test bed. The plate thicknesses shown in Figures 7-2 through 7-6 are recommended as the nominal sizes. The 5/16” plate at the bottom of the side pontoon near the R1 connector end (Figure 7-3) shall be extended by an additional 12 inches toward the middle of the pontoon. Areas of locally high stresses in the proximity of load application and around the openings should be checked more rigorously by hand.

An additional row of longitudinal stiffeners is recommended for the longitudinal pontoon side walls at approximately 12 inches from the bottom of the hull.