Twenty-Eighth DDESB Seminar
Orlando, FL, August 98

ANALYTICAL AND TEST RESULTS FOR WATER MITIGATION OF EXPLOSION EFFECTS

by

L. Javier Malvar and James E. Tancreto
Naval Facilities Engineering Service Center, Port Hueneme, CA

ABSTRACT

Small-scale tests have shown that water placed in the proximity of explosives stored in a confined space can reduce the internal gas pressure and impulse from a detonation by up to 90%. In FY 97 and 98, NFESC began development of water mitigation concepts for application in confined (e.g. Missile Test Cells, Underground Magazines) and partially confined (e.g. earth-covered magazines) facilities. Tests and analyses were conducted to establish basic parametric relationships and to identify the best numerical models for prediction of effects.

Numerical model results from hydrocodes and computational fluid dynamics codes are presented and compared to test data. A limited number of tests with variable confinement (amount of venting) were also conducted. Results were very encouraging, both for adequately predicting water mitigation effects and for the effectiveness of water mitigation even when venting reduces the internal gas pressure effects.

INTRODUCTION

Water placed in the vicinity of explosives in a confined environment significantly mitigates the quasi-static gas pressure from the explosion. Reports on several small-scale tests available from the open literature confirm that gas pressures can be reduced by up to 90%. This is of significant importance for explosive safety facilities where gas pressure controls debris distance, and in the structural design of containment facilities. Analytical and numerical methods are needed to model the water mitigation and predict the resulting gas pressure. The models need to account for such phenomena as heat absorption through phase change of the water, water dispersion, mixing and heat conduction between materials in various phase states, and combustion in the presence of oxygen for oxygen-deficient explosives.

FEASIBILITY TESTS

There are several reports in the literature on the effects of water on confined or vented explosion effects [1-6]. Four sets of tests were deemed of particular importance.

NCEL Tests

These tests were conducted at the David Taylor Research Center for the Naval Civil Engineering Laboratory (NCEL) [1]. The 4.67 lb. TNT explosive was tested in a closed chamber, first without, then surrounded by water (Figure 1-1). Both peak gas pressure and impulse were reduced by about 90% (Figure 1-2). Table 1 indicates measured gas pressures for different amounts of water (none, twice and four times the explosive weight).

USACE Huntsville Tests

The U.S. Army Corps of Engineers has recently tested a munition demolition container (Figure 2-1) for unexploded ordnance disposal [2]. To mitigate the effects of this contained explosion, water bags were added around the explosive. For a charge of 4 lb. TNT, the gas pressure was successfully reduced from about 350 to 100 psi, i.e. approximately a 70% reduction.

Small Scale Alvdalen Tests

Water was used in a small scale (1/20) model of the KLOTZ Club tunnel in Alvdalen [3]. This test differed from the previous ones in that venting was provided. Gas pressure reductions in excess of 50% were obtained if the water was placed in contact with the charge. Pressure reductions would decrease as the water was separated from the charge, reaching as low as 10% for water placed at the corners.

Large Scale Alvdalen Tests

A full-scale test was carried out in the KLOTZ Club tunnel in Alvdalen [4]. The charge comprised 180 artillery shells detonated simultaneously, with a NEW of 2200 lb. of TNT. This is different from the previous small-scale tests that were conducted with bare charges. Although the pressures inside the tunnel and near the entrance were lower with water, at some distance from the entrance the pressures were found to be higher.

NUMERICAL ANALYSES

To develop efficient water mitigation systems, parametric studies need to be completed. These studies would optimize water deployment near the explosives, assess water alternatives, and evaluate the effect of other parameters, such as munition casing. Due to the prohibitive cost of extensive testing, an evaluation of existing numerical tools was completed, in coordination with the Singapore Department of Defense.

The numerical tools available for performance prediction of water mitigation can be roughly divided into two categories, Eulerian hydrocodes and computational fluid dynamics (CFD) codes.

Eulerian hydrocodes use classical continuum mechanics to describe highly transient dynamics, such as shock or blast wave propagation, through continuous media by applying the principles of mass, momentum and energy conservation. They use model discretizations that are fixed in space and time, but allow for mass, temperature and pressure transfer across cells. At any point in time each cell will typically contain several materials in various phases, and at different pressures and temperatures. Inherent difficulties arise in modeling the energy transfer between various materials within a cell, material phase changes, chemical reactions and turbulence effects. The hydrocodes considered included AUTODYN, CTH, SHARC, STREAK and PAMSHOCK (used by Singapore). All have some provision for diffusion control within mixed cells. Some include numerical simulation of chemical reactions, such as the additional combustion in the presence of oxygen for oxygen-deficient explosives. These codes are numerically efficient and may provide an adequate tool for modeling water mitigation.

Computational fluid dynamics codes are usually Eulerian codes themselves, however they were developed specifically for the study of liquids and gases. They specifically address the study of multi-phase flow including generalized thermo-chemical kinetics, as well as nonequilibrium particulate capabilities. They can also include dynamic adaptive grid techniques and hybrid structured/unstructured grids for modeling complex domain changes. The CFD codes considered included EITACC, CRAFT and PHOENICS. These codes are more complex and more computationally intensive but may provide more accuracy in modeling water mitigation.

In a first phase of the project, the water mitigation data from the feasibility tests was used in a round robin simulation to obtain an assessment of the predictive capabilities of each code. Both accuracy and computational efficiency were addressed to provide a balanced solution approach.

In the numerical analyses, the three feasibility tests were modeled as follows:

<u>NCEL Tests</u>

Two configurations were calculated. The first one had 4.67 lb. of TNT explosive (E) and air (A) in a cylindrical chamber of volume 1150 ft^3, as shown in Figure 1-3. An axisymmetric model was used and only half of the setup was modeled. Note that both the explosive and the room are modeled as cylinders of equal height and diameter. The second configuration (Figure 1-4) included 13.5 lb. of water (W) also modeled as a cylinder of equal height and diameter surrounding the explosive.

<u>USACE Huntsville Tests</u>

Three configurations were calculated. The first one had 4 lb. of TNT explosive (E) and air (A) in a cylindrical chamber as shown in Figure 2-2. An axisymmetric model was used and only half of the setup was modeled. Note that the explosive was modeled as a cylinder of equal height and diameter. The second configuration (Figure 2-3) included 20 lb. of water (W) also modeled as a cylinder of equal height and diameter surrounding

the explosive. In addition a third configuration was analyzed (Figure 2-4) in which the water was placed only around the explosive (on the sides).

Small Scale Alvdalen Tests

Two configurations were calculated. The first one only had 200 g of C4 explosive (E) and air (A) in a cylindrical chamber of volume 0.061 m^3, as shown in Figure 3. An axisymmetric model was used. The C4 was assumed to have a density of 1.66 g/cc, and was modeled as a cylinder of equal height and diameter (its radius is 2.68 cm or 1.05 inches). The first configuration included only the C4. The second configuration included 600 g. of water (W) also modeled as a cylinder of equal height and diameter surrounding the explosive (its radius is 4.86 cm or 1.91 inches).

Large Scale Alvdalen Tests

The three-dimensional SHARC model used is shown in Figure 4. Modeling details for this analysis are presented in a companion paper in the same session [7].

FEASIBILITY TESTS AND NUMERICAL ANALYSES RESULTS

The tri-service manual, P-397 [8], indicates the expected gas pressures generated from confined explosions. For low charge densities (less than 0.02 lb/ft^3), the existing oxygen in the room may be sufficient to provide full combustion (Figures 5, 6). For charge densities above 0.1, only the heat of detonation is released, and for charges in between, a transition zone is provided. Figure 5 indicates typical charge densities per application, and Figures 6 and 7 show comparisons with the feasibility and confined parametric tests.

NCEL Tests

As shown in Table 1, the tests without water and a hung bare charge resulted in a quasi-static peak gas pressure between 52.7 and 55.4 psi. The codes which provided for combustion of the detonation products, e.g. SHARC, EITACC, STREAK, were able to predict gas pressures from about 43 to 54 psi. Codes without that capability only predicted the pressure due to detonation, which is less than 30 psi. This coincides with the P-397 data shown in Figure 6, which indicates over 50 psi for combustion, and less than 30 psi for detonation [8].

For the case where the explosive was immersed in water, the test indicates a measured gas pressure of 4.4 psi. All codes were able to approximate this test, with predicted pressures from 5.8 to 7.2, indicating that (1) water prevented combustion, and (2) all codes were able to approximate water diffusion and heat absorption.

USACE Huntsville Tests

For these tests, only the heat of detonation is released, as shown in Figure 6, and there is no need to model combustion. Hence all codes were able to provide relatively close predictions to the measured 350 psi gas pressure without water. Predictions ranged from 257 psi with CTH to 450 psi with AUTODYN, and with STREAK, EITACC and CRAFT reporting between 311 and 400 psi.

The pressure reduction due to the presence of water was also properly captured in general, with predictions from 95 to 118 psi for most codes, and 148 for EITACC. CTH and AUTODYN were also used to analyze a hypothetical case were the water would surround the charge as in Figure 2-4. In that case predicted gas pressures were 188 and 213 psi, indicating the importance of water location in mitigation the explosion effects.

Small Scale Alvdalen Tests

In this test no combustion takes place (see Figure 6), and the room is vented. Only CRAFT and AUTODYN were used in this analysis. The apparent decay in pressures due to water coincided with CRAFT predictions, and was also approximately captured by AUTODYN.

Large Scale Alvdalen Tests

The analyses showed that the steel casing must be accounted for, since it may absorb up to half of the detonation energy in the form of kinetic energy. Details are included in reference [7].

PARAMETRIC TESTS

Additional tests in support of this research were conducted at the Aberdeen Test Center. Confined tests were conducted with water to explosive weight ratios of 2:1, 3:1, and 4:1, and for low charge densities. These results are shown in Figure 7. It is apparent that a water-to-TNT ratio of 2:1 is sufficient to effectively prevent combustion. Increasing ratios further reduced the gas pressure (Figure 7).

Parametric tests with venting also seem to show a significant pressure reduction. Results from these tests have not yet been all reduced and are not presented here.

CONCLUSIONS

Feasibility and parametric tests have shown that water placed in the proximity of explosives can reduce gas pressures and impulse by up to 90%. Greatest decays were found for low charge densities, and for full confinement. Tests and analyses also showed significant gas pressure reductions with limited venting. Pressure decays increased with the amount of water.

All hydrocodes and CFD codes studied were able to properly model water aerosolization, phase change and heat absorption. For the tests without water and low

charge weights, only the codes that specifically addressed combustion (of the oxygen-deficient explosive) were able to predict test results.

REFERENCES

1. Keenan, W.A., Wager, P.C., "Mitigation of Confined Explosion Effects by Placing Water in Proximity of Explosives," 25th DDESB Seminar, Anaheim, CA, 18-20 August 1992.

2. Marchand, K.A., Oswald, C.J., Polcyn, M.A., "Testing and Analysis Done in Support of the Development of a Container for On-Site Weapon Demilitarization," 27th DDESB Seminar, Las Vegas, NV, 20-22 August 1996.

3. Forsen, R., Carlberg, A., Eriksson, S., "Small Scale Tests on Mitigation Effects of Water in a Model of the KLOTZ Club Tunnel in Alvdalen," 27th DDESB Seminar, Las Vegas, NV, 20-22 August 1996.

4. Forsen, R., Hansson, H., Carlberg, A., "Large Scale Test on Mitigation Effects of Water in the KLOTZ Club Installation in Alvdalen," FOA Report R-97-00470-311-SE, Defense Research Establishment, Sweden, February 1997.

5. Eriksson, S., Vretblad, B., "Blast Mitigation in Confined Spaces by Energy Absorbing Materials," 26th DDESB Seminar, Miami, FL, 16-18 August 1994.

6. Salter, S.H., Parkes, J.H., "The Use of Water-Filled Bags to Reduce the Effects of Explosives," 26th DDESB Seminar, Miami, FL, 16-18 August 1994.

7. Crepeau, J., Needham, C., "The Effects of Water on Blast From the Simultaneous Detonation of 180 152 mm Shells," 28th DDESB Seminar, Orlando, FL, 18-20 August 1998.

8. Naval Facilities Engineering Command, "Structures to Resist the Effects of Accidental Explosions," NAVFAC P-397 Design Manual, Alexandria, VA, 1991 (also Army TM5-1300 and Air Force AFM 88-22).

Table 1. NCEL Test Results.

TEST	CONFIGURATION	FLUID	PEAK GAS PRESSURE (PSI)
1	Hung Bare Charge	None	55.4
2	Bare Charge on Table	None	51.3
3	Cube	9 lb. Water	5.1
4	Cube	13.5 lb. Water	4.4
5	2” Buffer Wall	9 lb. Water	8.3
6	2” Buffer Wall	9 lb. Water	7.5
7	3” Buffer Wall	13.5 lb. Water	5.9
8	3” Buffer Wall	13.5 lb. Water	5.8
9	Cube	9 lb. 50/50 Antifreeze	6.0
10	Hung Bare Charge	None	52.7

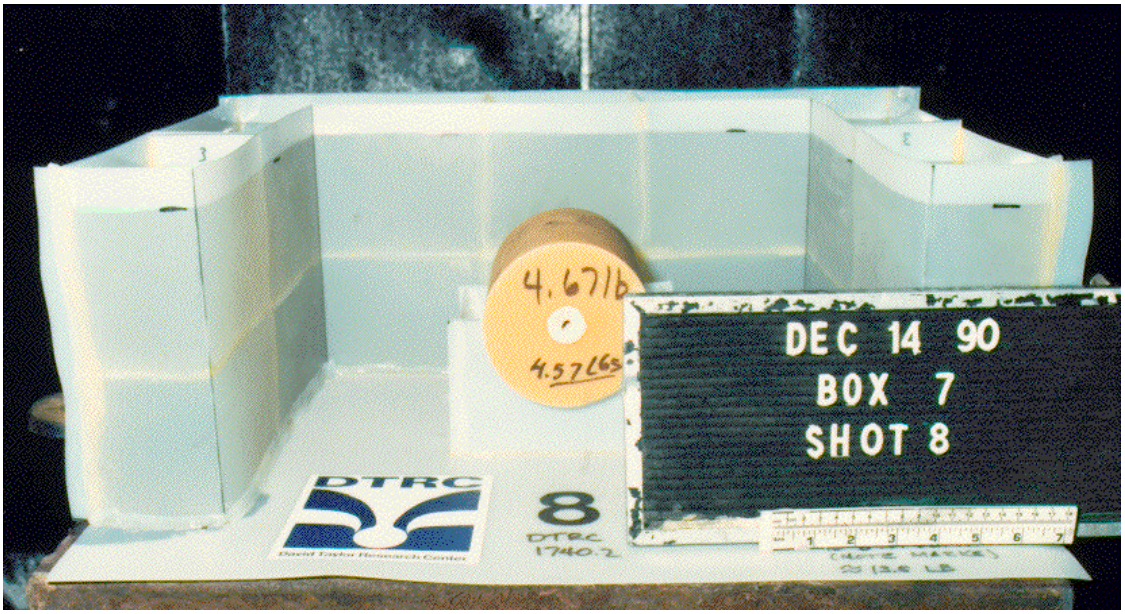

Figure 1-1. NCEL Test Setup.

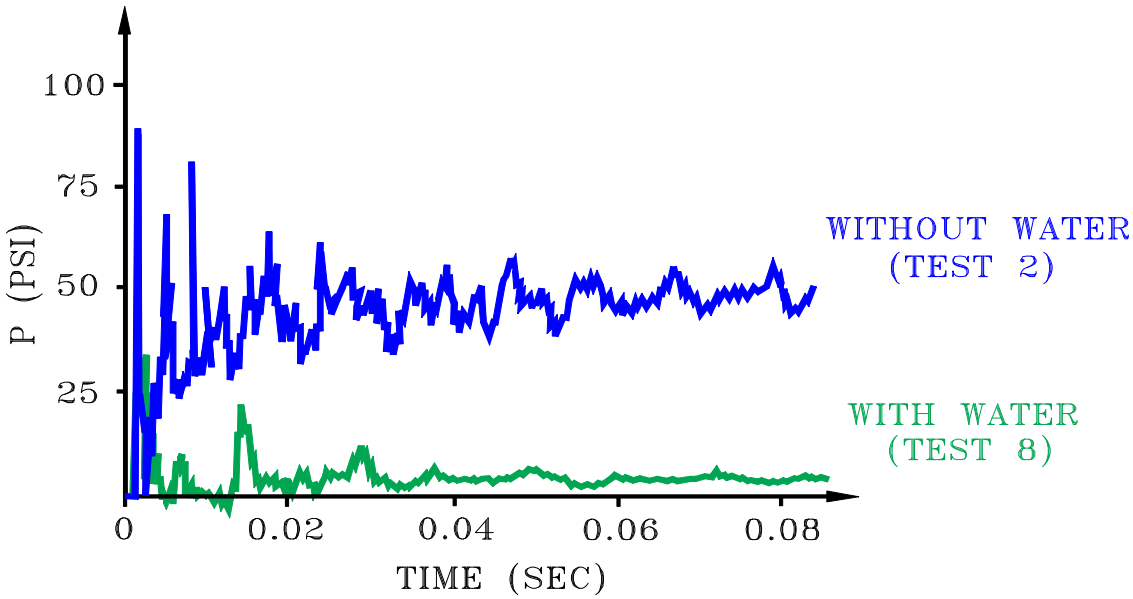

Figure 1-2. NCEL Test: typical 89% gas pressure reduction.

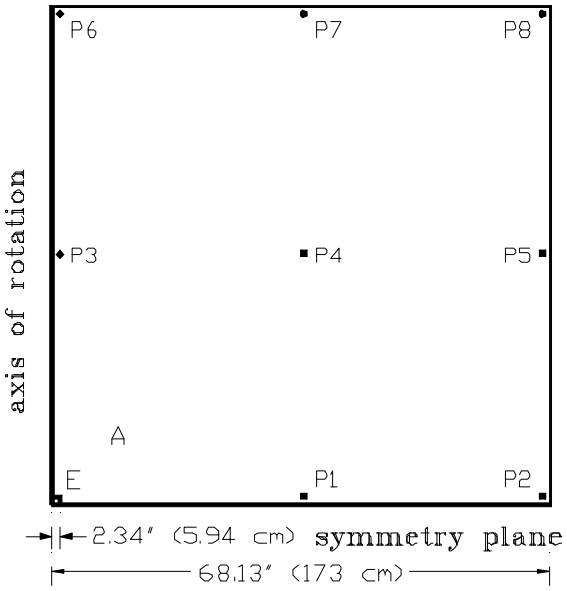

Figure 1-3. NCEL Test: explosive only.

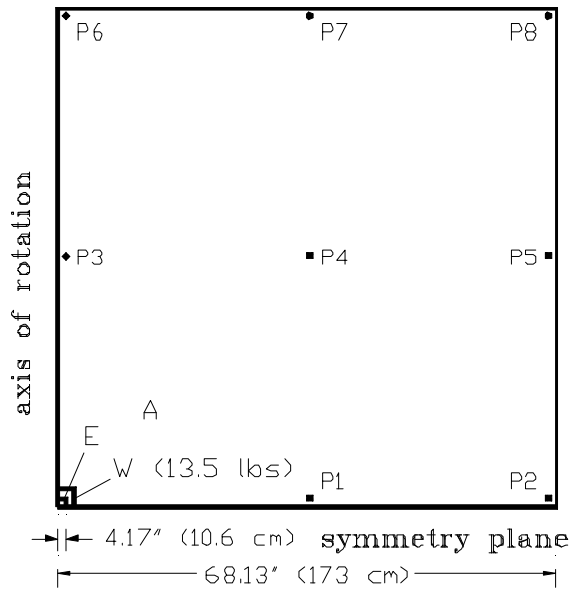

Figure 1-4. NCEL test: explosive in water

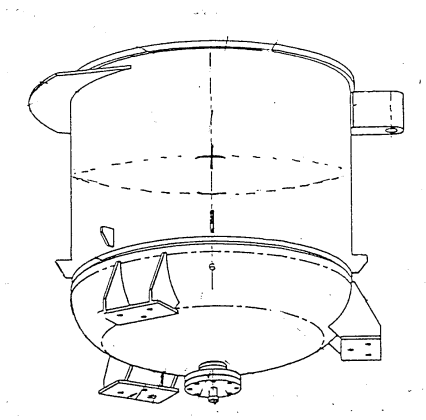

Figure 2-1. USACE munition demolition container.

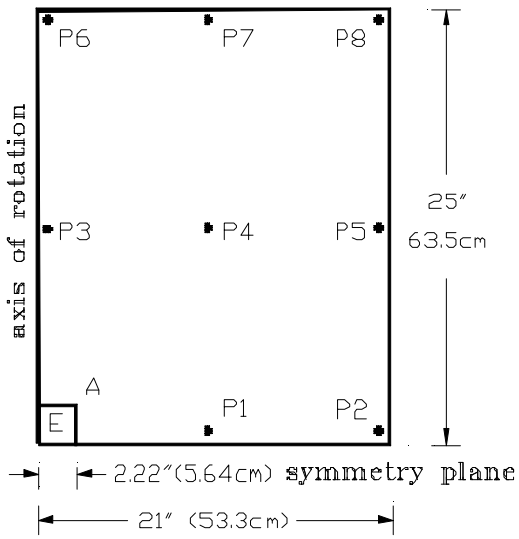

Figure 2-2. USACE test model: water only.

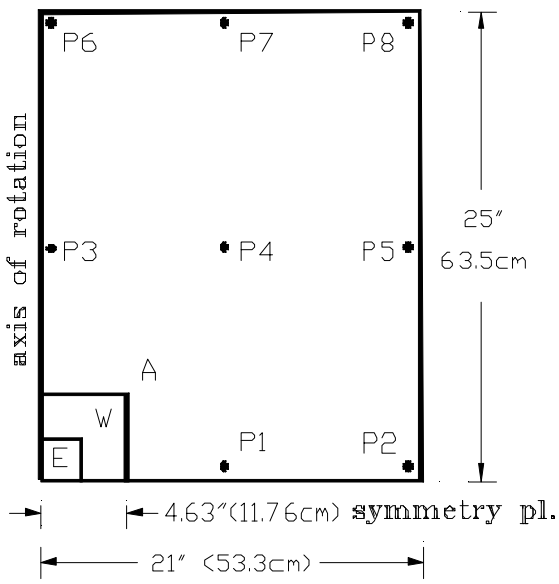

Figure 2-3. Explosive immersed in water.

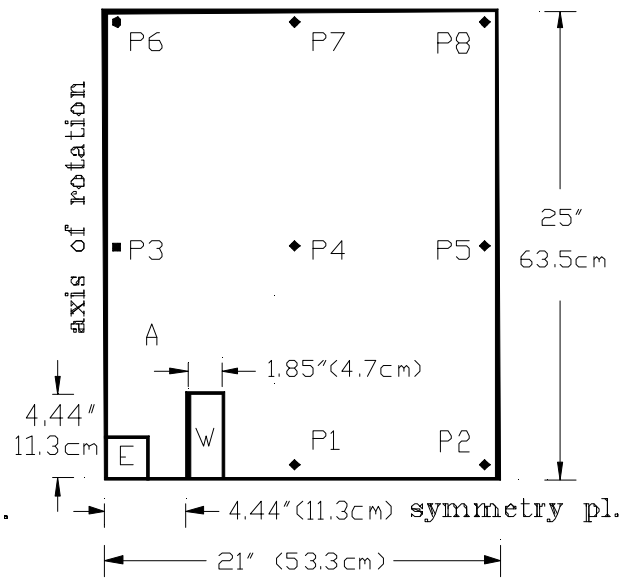

Figure 2-4. Water around explosive.

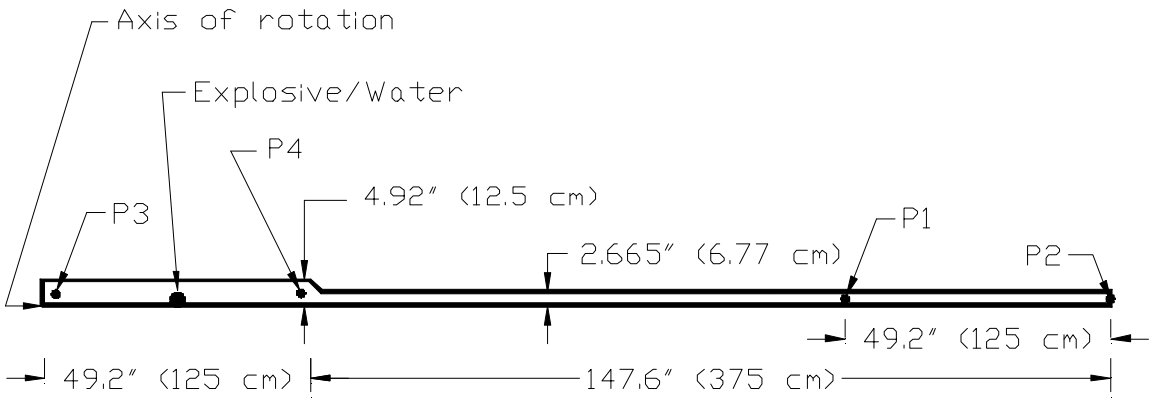

Figure 3. Model of the KLOTZ Club tunnel in Alvaden, Sweden.

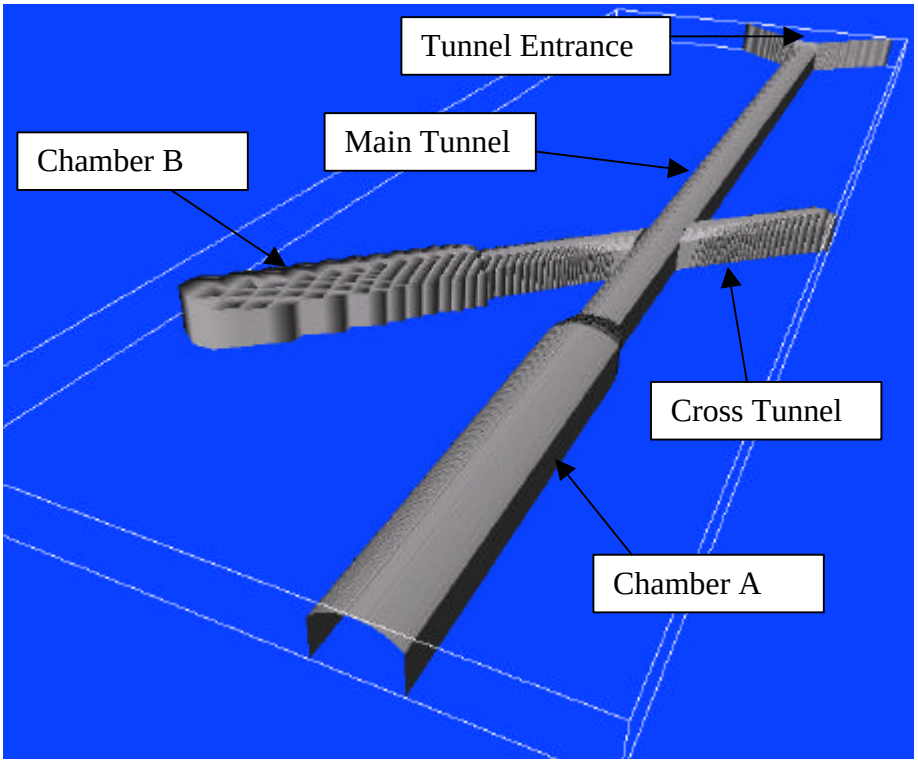

Figure 4. Large Scale Alvdalen Tunnel, ARA SHARC Model

Figure 5. Gas pressure for confined explosions (P-397).

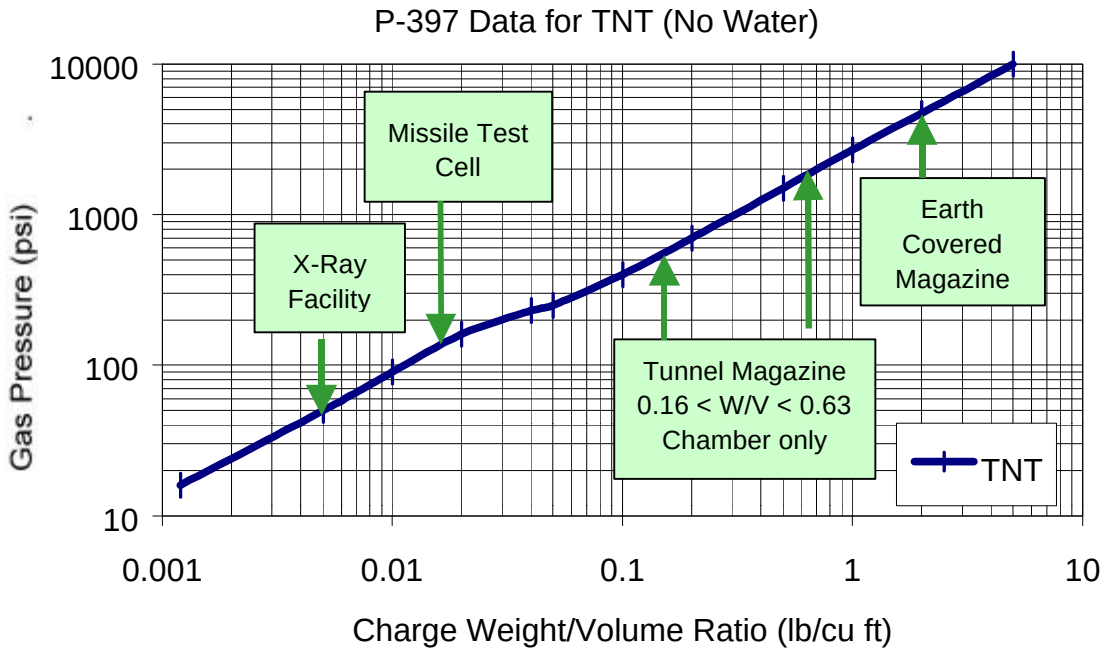

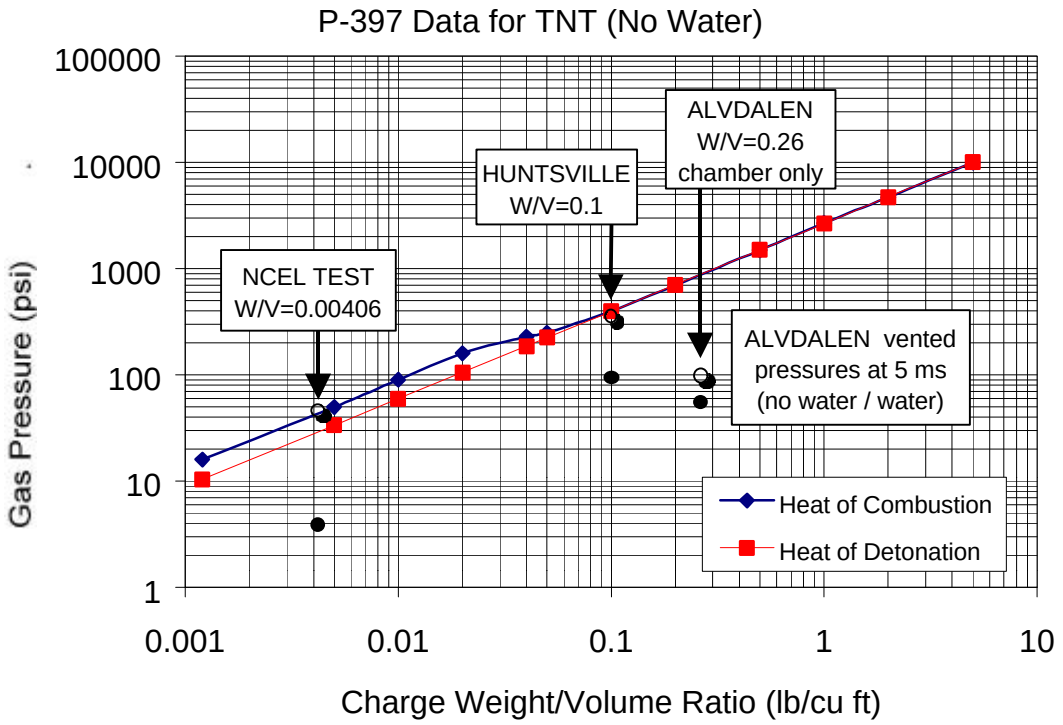

Figure 6. Gas pressure mitigation in the feasibility tests.

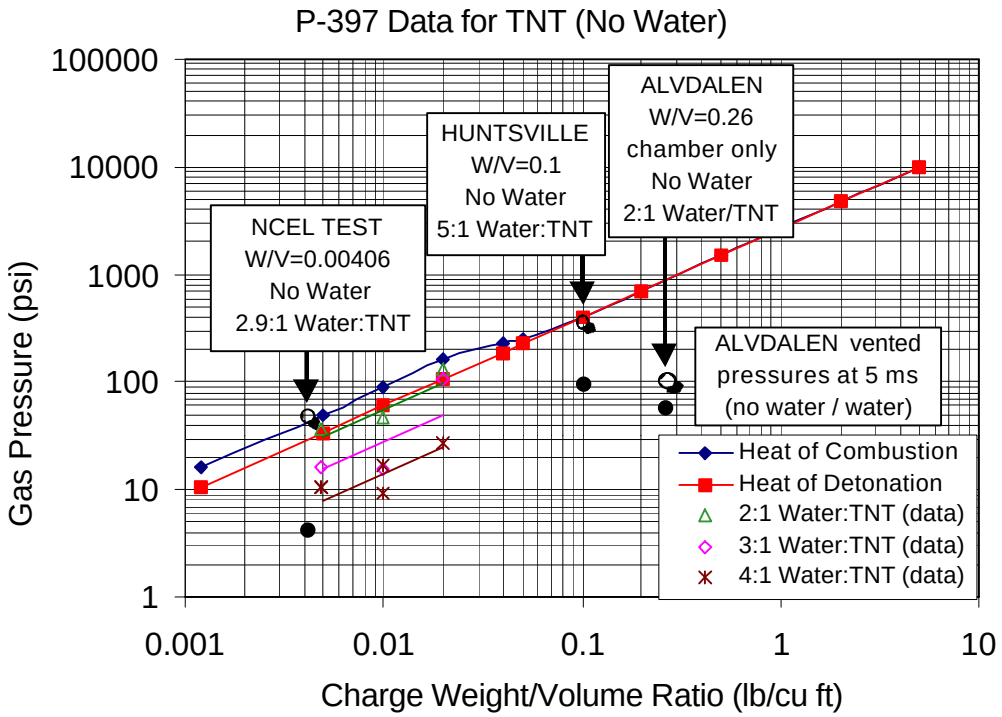

Figure 7. Gas pressure mitigation in the parametric confined tests.