Naval Facilities Engineering Command
1322 Patterson Ave SE Suite 1000
Washington Navy Yard, DC 20374-5065 APPROVED FOR PUBLIC RELEASE

D R A F T

Navy Railroad Trackage Field Assessment Manual

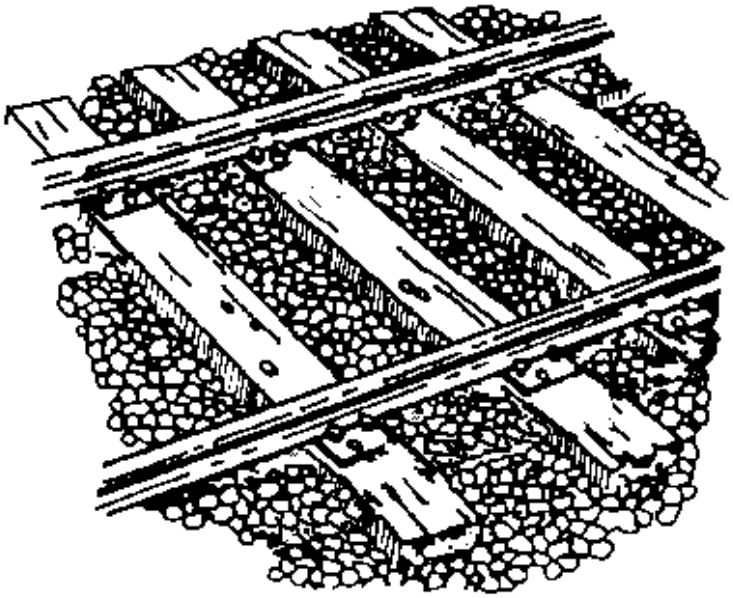

MO-103.9
2001

DISTRIBUTION LIST

WPNSTA EARLE (4)
WPNSTA CHARLESTON (4)
WPNSTA CONCORD (2)
WPNSTA SEAL BEACH (4)
NAVSURFWARCENDIV CRANE (4)
NAVSURFWARCENDIV INDIAN HEAD (2)
NAVSHIPYD PORTSMOUTH (4)
NAVSHIPYD NORFOLK (4)
NAVSHIPYD PUGET SOUND (4)
NAVAIRWARCENACDIV LAKEHURST (2)
PWC JACKSONVILLE (2)
PWC NORFOLK (2)
PWC PEARL HARBOR (2)
PWC SAN DIEGO (2)
PWC GREAT LAKES (2)
NSA MECHANICSBURG (4)
NAS ATLANTA (2)
CINCLANTFLT (2)
CINCPACFLT (2)
DIRSSP (2)
CMC (2)
CBC PORT HUENEME (2)
CBC GULFPORT (2)
SUBASE BANGOR (4)
SUBASE KINGS BAY (4)
NAVPHIBASE LITTLE CREEK (2)
SWIFTLANT KINGS BAY (2)
FISC JACKSONVILLE (2)
FISC PEARL HARBOR (2)
CG MCB CAMP PENDELTON (2)
CG MCB CAMP LEJEUNE (2)
CB MCLB ALBANY (2
CB MCLB BARSTOW (2)
MCAS BEAUFORT (2)
MCAS CHERRY POINT (2)
SOUTHWESTNAVFACENGCOM (2)
LANTNAVFACENGCOM (2)
SOUTHNAVFACENGCOM (2)
NFESC (4)
COMNAVFACENGCOM (4)
COMNAVAIRSYSCOM (2)
COMNAVSEASYSCOM (2

Stocked by:

FOREWORD

The Navy's railroad system is a critical asset for both peacetime and mobilization missions.

The purpose of this publication is to serve as a maintenance guide for Naval activities with active railroad trackage or inactive railroad trackage with a mobilization mission. Specific safety, inspection and certification requirements for railroads are provided in NAVFACINST 11230.1.

Previously, as a general guide, it was recommended that work planning should start when a deficiency on a section of track exceeded one-half of the allowable deficiency so that repairs could be accomplished before deficiencies exceeded the allowable standards for restricted certification. The standards contained herein provide maintenance standards for each of the possible type deficiencies based on the category of track and the amount of use.

In addition, track components to be inspected, description of observations and measurements to be taken and how inspection shall be conducted are described in detail.

Additional information or suggestions that will improve this handbook are invited and should be submitted through appropriate channels to the Naval Facilities Engineering Command (Attention: Code NPW), 1322 Patterson Ave. Suite1000, Washington Navy Yard DC 20374-5065.

Abstract

This publication provides recommended minimum maintenance condition levels for Navy railroad tracks. In addition, it provides guidance and standards for inspection and assessment to be used in performing periodic inspection and planning and development of an effective track maintenance program.

Acknowledgements

Appendix C, Figures C1-C4, C7, C9-C15, C17, C19-C21, C23 and C24 and description and appearance in track of rail defects are reprinted by permission of Sperry Rail Service.

CHANGE CONTROL SHEET

Document all changes, page replacements, and pen and ink alterations posted in this manual.

AMENDMENT NUMBER	AMENDMENT DATE	POST DATE	POSTED BY (LAST NAME)

Contents

	Page
CHAPTER 1. Intent and Application	
1. Introduction	1
2. Definitions	2
3. References	3
4. Intent	3
5. Track Categories	4
6. Application	5
CHAPTER 2. Inspection of Track and Record Keeping	
1. Track Inspector's Qualifications	6
2. Categories of Inspections	6
3. Inspection of Partially Visible Track	11
4. Track Maps	13
CHAPTER 3. Roadway	
1. Roadway	15
2. Drainage	15
3. Vegetation	17
CHAPTER 4. Ballast	
1. General	19
2. Selection Criteria	19
3. Maintenance	20
CHAPTER 5. Ties	
1. General	21
2. Wood Ties	21
3. Concrete Ties	23
4. General	25
CHAPTER 6. Tie Plates, Rail Fastenings, and Other Track Materials	
1. General	29
2. Tie Plates	29
3. Spikes	30
4. Joints	34
5. Rail Anchors	37
6. Gage Rods	38
CHAPTER 7. Rail	
1. Defective Rail and Remedial Actions	41
2. Rail Maintenance	48
3. Lightweight Rail	48
CHAPTER 8. Turnouts	
1. General	50
2. General Requirements	50
3. Switches and Switch Stands	54
4. Frogs	60
5. Guard Rails	62
CHAPTER 9. Rail Crossings	
1. General	65
2. Requirements	65
3. Anchors	65
CHAPTER 10. Road Crossings	
1. Drainage	66
2. Flangeways	66
3. Track	66
4. Crossing Surfaces and Materials	68
5. Grade Crossing Protection – Signs and Signals	68
6. Electric/Electromechanical Grade Crossing Signals	69

Page

CHAPTER 11. Bridges
1. General 79
2. Bridge Inspection 79
3. Dangerous Conditions 79

CHAPTER 12. Track Geometry
1. General 80
2. Gage 80
3. Crosslevel 84
4. Superelevation 85
5. Warp 85
6. Alignment 89
7. Profile 91

CHAPTER 13. Clearances
1. Measurement 92
2. Clearance Requirements, Tangent Track 92
3. Clearance Requirements, Curved Track 92
4. Track Centers 94
5. Changes to Clearances 95

CHAPTER 14. Miscellaneous Track Appliances
1. Track Scales 96
2. Bonded and Grounded Track 96
3. Derails 97

CHAPTER 15. Maintenance Activities for Category "D" Track
1. General 98
2. Maintenance Requirements 98
3. Inactivation and Disposal 98

Page

APPENDIX A - References 101

APPENDIX B - Track Inspection Forms 103

APPENDIX C - Field Identification of Rail Defects 111

APPENDIX D - Details of Rail Sections . . 134

APPENDIX E - Summary of Standards . . . 138

List of Figures

		Page
Figure 5-1.	Examples of good and defective ties	24
Figure 5-2.	Required tie support at joints.	27
Figure 6-1.	Single shoulder tie plate.	30
Figure 6-2.	Double shoulder tie plate.	30
Figure 6-3.	Spiking pattern for tangents and curves of 6 degrees or less.	31
Figure 6-4.	Spiking pattern for curves greater than 6 degrees but less than 16 degrees.	32
Figure 6-5.	Spiking pattern for curves 16 degrees or greater	32
Figure 6-6.	Incorrect spiking of angle bars.	33
Figure 6-7.	Correct spiking of angle bars.	33
Figure 6-8.	Proper bolt installation.	35
Figure 6-9.	Alternating bolt pattern.	36
Figure 6-10.	Recommended minimum anchoring pattern.	39
Figure 7-1.	Rail wear measurement.	46
Figure 7-2.	Rail base corrosion measurement.	47
Figure 7-3.	End batter measurement.	47
Figure 8-1.	Parts of a turnout (continued).	51
Figure 8-1.	Parts of a turnout (concluded).	52
Figure 8-2.	Reversing tangent length and switch stand placement.	53
Figure 8-3.	Switch point contour.	56
Figure 8-4.	Switch point plan and elevation.	57
Figure 8-5.	Frog point and tread contours.	60
Figure 8-6.	Allowable wear on guarding face of self-guarded frog.	61
Figure 8-7.	Measurement of flangeway width, flangeway depth, guard check gage, and guard face gage.	63
Figure 10-1.	Track construction for road crossing.	67
Figure 12-1.	Gage measurement.	81
Figure 12-2.	Required gage measurement locations within turnouts.	82
Figure 12-3.	Crosslevel measurement.	84
Figure 12-4.	Determination of warp.	88
Figure 12-5.	Measurement of curve alignment.	90
Figure 13-1.	Minimum clearances for tangent track.	94
Figure B-1.	Example track inspection record.	108
Figure B-2.	Example turnout inspection record.	109
Figure B-3.	Highway Grade Crossing Warning System Inspection/Test Report	110
Figure C-1.	Rail nomenclature.	111
Figure C-2.	Relative positions of planes through a rail.	112
Figure C-3.	General appearance of bolt hole cracks.	114
Figure C-4.	General appearance of broken base.	114

		Page
Figure C-5.	General appearance of broken rail.	115
Figure C-6.	General appearance of corrugation.	116
Figure C-7.	General appearance of crushed head.	117
Figure C-8.	Rail end batter.	119
Figure C-9.	Typical appearance of an engine burn.	119
Figure C-10.	General appearance of an engine burn fracture.	120
Figure C-11.	General appearance of flaking.	121
Figure C-12.	General appearance of flow.	122
Figure C-13.	General appearance of head/web separation.	123
Figure C-14.	General appearance of horizontal split head.	124
Figure C-15.	General appearance of mill defects.	125
Figure C-16.	General appearance of piped rail.	126
Figure C-17.	Cross-sectional view of piped rail.	126
Figure C-18.	General appearance of vertical head and side wear.	127
Figure C-19.	General appearance of shelling.	128
Figure C-20.	General appearance of slivers.	129
Figure C-21.	General appearance of split web.	130
Figure C-22.	General appearance of torch cut rail.	131
Figure C-23.	General appearance of transverse defects.	132
Figure C-24.	General appearance of vertical split head.	133
Figure D-1.	Details of T-rail section.	134

List of Tables

		Page
Table 4-1.	AREA Recommended Gradations for Ballast.	20
Table 7-1.	Rail Defect Standards	42
Table 7-1.	Rail Defect Standards (Concluded).	43
Table 7-2.	Remedial Actions for Rail Defect.	44
Table 7-2.	Remedial Actions for Rail Defect (Concluded).	45
Table 8-1.	Measurements and Operating Restrictions for Frogs and Guard Rails.	62
Table 8-2.	Minimum length of straight guarding face in advance of frog point.	63
Table 12-1.	Recommended gage for curved track.	83
Table 12-2.	Superelevation for Curved Track.	86
Table 13-1.	Clearance Requirements for Tangent Track.	93
Table D-1.	Details of Rail Sections.	135
Table D-1.	Details of Rail Sections (Continued).	136
Table D-1.	Details of Rail Sections (Concluded).	137

CHAPTER 1
Intent and Application

1-1. INTRODUCTION.

a. The Navy's railroad system is a critical asset for both peacetime and mobilization missions.

b. The standards contained herein are promulgated to protect investments in track maintenance and rehabilitation and to ensure that the Navy's railroad track is maintained at the level needed to support mission requirements. Previously, as a general standard, it was recommended that work planning should start when a deficiency on a section of track exceeded one-half (1/2) of the allowable deficiency so that repairs could be accomplished before deficiencies exceeded the allowable standards for restricted certification. The standards contained herein provide maintenance standards for each of the possible type deficiencies addressed in the Federal Railroad Administration (FRA) “Track Safety Standards” and NAVFAC Instruction 11230.1 “Inspection, Certification, and Audit of Crane and Railroad Trackage,” based on category of track and amount of use.

c. Simply meeting the minimum standard required herein is not necessarily the best, most cost effective, long-term maintenance policy. The frequent

occurrence of substandard or restricted conditions indicates the need for a comprehensive track evaluation to determine if major repair or rehabilitation is warranted.

1-2. DEFINITIONS.

The following standards are discussed in this manual:

a. ***Inspection Standards -***

These standards:

(1) Identify the track components to be inspected;

(2) Description of observations and measurements to be taken;

(3) Tell how inspection shall be conducted.

b. ***Safety Standards -***

Based on the degree-of-hazard, these standards provide minimum safe operating limits for specific defects. Safety standard criteria is addressed in NAVFACINST 11230.1 and FRA "Track Safety Standards." Safety standards are addressed in Tables 7-1 and 8-1 and in Appendix E for comparison with maintenance standards. When established safety limits are exceeded, speed restrictions or stoppage of use shall be enforced in accordance with NAVFACINST 11230.1.

c. ***Maintenance Standards -***

These standards provide limits for specific

defects and should be used to determine when maintenance is desirable and should be accomplished. This allows for accomplishment of maintenance or repair prior to condition exceeding safety standards. The standards may be applied on a sliding or changing scale based on use and/or the category of track.

1-3. REFERENCES. Appendix A contains a list of references used in this document.

1-4. INTENT.

a. These standards define the minimum required maintenance condition levels for railroad track. These standards shall be used for inspection and routine maintenance of railroad track by in-house or contract personnel.

b. These standards are not intended for, and shall not be used as specifications for new construction or major track rehabilitation. The guidance given in Military Handbook (MIL-HDBK) 1005/6 "Trackage"; NAVFAC Guide Specification NFGS-05650 "Railroad Trackwork & Accessories"; American Railway Engineering and Maintenance-of-Way Association (AREMA) "Manual for Railway Engineering"; and/or host nation industry/government standards will continue to apply to new construction and to the complete reconstruction of segments of existing facilities.

c. Should the commercial carrier serving the installation require a more restrictive standard or criteria not included in these standards, the installation track shall be maintained to meet the carrier's requirements.

d. The judgment of the designated track inspector and the criteria presented herein must supplement each other in the application of these standards.

1-5. TRACK CATEGORIES. All railroad track shall be maintained in accordance with one of the following categories:

Category	Types of Track and Use	Minimum FRA Safety Standard	Target FRA Safety Standard
A	All active mainline track or other active track with speed greater than 10 mph	2	3 - 4
B	Active passing track, sidings yard tracks, holding track,, or storage track	2	2 1/2 - 3
C	Active track with an average of 2 movements or less per month or inactive track with a mobilization mission	1	2
D	Inactive track. No current mobilization requirements	0	0

Any track carrying nuclear or hazardous material shall be maintained to either Category A or B, as appropriate for its use and operating speed.

1-6. APPLICATION.

Requirements versus recommendations. In this manual, the words “shall” and “is required” indicate requirements of the standards which must be met as prescribed by NAVFACINST 11230.1 and this manual. Recommendations are indicated by the words “may,” “should,” and “it is recommended that ....” These recommendations represent good maintenance practice.

CHAPTER 2
Inspection of Track and Record Keeping

2-1. TRACK INSPECTORS QUALIFICATIONS

a. Track inspector's are responsible for conducting safety inspections (paragraph 2-2.c) and control inspections (paragraph 2-2.d)

b. The individual(s) who complete(s) the required track inspections shall meet the requirements of NAVFACINST 11230.1 and be designated by the activity's Certifying Official.

c. *Responsibilities of inspectors.*

The designated track inspector is responsible for:

(1) Assuring that inspections are performed in accordance with NAVFACINST 11230.1 and this Chapter.

(2) Examining the track to determine whether the track condition complies with the safety requirements of NAVFACINST 11230.1 and the maintenance standard requirements addressed in this manual.

(3) Reporting any deficiencies from the full compliance condition level.

2-2. CATEGORIES OF INSPECTIONS.

a. ***Continuous Operator Inspection.*** Daily or prior to use, safety checks listed in activity regulations shall be conducted. In addition, on-the-job observations shall be going on at all times when equipment is

working. Railroad operations personnel shall be encouraged to observe and report track problems, deficiencies, obstructions and the "feel" of the track. Items to be aware of are broken rails and other rail defects, faulty switch point closure, indication of wide gage, poor alignment or surface, loose crossing planks, wheel flanges hitting frog points, working spikes and joints, rail pull aparts, evidence of imminence of track buckling, blocked drainage, scour at bridges, and the threat of slides. All these things can contribute to train accidents and should be brought to the attention of the responsible person for correction.

b. ***Preventive Maintenance Inspection.*** Preventive maintenance is a continuous working inspection, examination of component parts, lubrication, adjustment, and minor repair. Preventive maintenance is divided into preventive maintenance service and preventive maintenance inspection. Further discussion of requirements and instructions on performing preventive maintenance are provided in NAVFACINST 11230.1 and NAVFAC manuals MO-103 "Maintenance of Trackage" and MO-322 "Inspection of Shore Facilities" Volumes I and II. Preventive maintenance service and inspection are normally conducted by crews assigned to or operating the equipment, by the track walker, by Maintenance Shop personnel, and/or by contract. Inspection report formats shall, as a minimum be in accordance with NAVFACINST 11230.1. A Turnout Inspection Checklist, illustrated in Figure B-2,

may be used. A reproducible master of the Turnout Inspection Checklist is provided in NAVFACINST 11230.1.

c. ***Safety Inspection.*** Safety inspection is that inspection of track performed in accordance with paragraphs 213.233, 213.235 and 213.239 of the FRA Track Safety Standards and NAVFACINST 11230.1. The purpose of this inspection is to identify critical and catastrophic defects affecting the safety of the track being inspected.

(1) *Schedule* - As a minimum, track shall be inspected at the following interval:

Track Category	Traffic Frequency	Minimum Required Inspection Frequency
A	Mainline Track – Off-station	Weekly
A & B	Two or more movements per week	Monthly
A & B	Greater than one movement per month but less than two movements per week	Quarterly
A, B & C	One movement or less per month	Semi-Annual
D	No movements or Inactive	Annual Control Inspection only (See Chapter 15)

Off-station track is defined as that track belonging to the Navy that extends outside the main station through residential and/or commercial public areas.

(2) *Inspection Method.* Track inspections shall be made on foot or in an on-track vehicle at a speed which is conducive to effective track inspection, but in no case to exceed 5 mph. Turnouts and rail crossings shall be inspected on foot.

(3) *Inspection Records.* The inspector shall complete and sign the Track Inspection Record on the day the inspection is made. Inspection records must specify the track inspected, date of inspection, location and nature of any deviation from the requirements and the remedial action taken. Inspection reports which document deficiencies resulting in a track falling below its designated condition level shall be kept on file until all those deficiencies have been corrected. As a minimum, inspection records shall be retained for at least one year after the inspection covered by the report. An example record is provided in Figure B-1. A reproducible master of the Track Inspection Record is provided in NAVFACINST 11230.1.

d. ***Control Inspection.*** Control inspection is defined in MO-322, Vol. 1. Inspection checklists and guidelines are contained in MO-103, as well as NAVFACINST 11230.1 and this manual. Control inspections are conducted annually in accordance with of NAVFACINST 11230.1. Control inspections will be supported by engineering evaluations when there is any

doubt of physical condition. To supplement the annual control inspection, an operational inspection shall be performed at intervals not to exceed two years in accordance with NAVFACINST 11230.1. The Track Inspection Record discussed in paragraph 2-1.c.(3) should be used to document control inspections. The purpose of the control inspection is to identify all track defects including those exceeding maintenance standards provided in this manual. Results of this inspection will not only be used to establish urgent repairs, but by using the inspection reports and relating them to the activity's basic trackage requirements, its in-house capabilities, priorities, available funding, and other factors, the annual and long range trackage maintenance and repair programs are developed and programmed.

e. **Electric/electromechanical grade crossing signals.** The inspection and testing of electric/ electromechanical signals at road-railroad grade crossings shall be performed at the frequency specified in paragraph 10-6.b and documented in accordance with paragraph 10-6.c

f. **Internal rail defect inspection.** Internal rail defect inspection shall be performed in accordance with NAVFACINST 11230.1.

g. **Special inspections.**

(1) Infrequently used track. Track that has not been used for a period of six months or more shall be inspected prior to the first movement over the track.

(2) Mass rail movement. For track that has not been inspected within the last two months, a track inspection is recommended prior to any mass rail movement (50 cars or more).

(3) Unusual occurrences. Track inspections shall be conducted following unusual occurrences such as derailment, accident, flood, fire, earthquake, severe storm, or other occurrence which could have an adverse effect on the track structure. These inspections shall be conducted prior to the first movement over the track following the unusual occurrence.

2-3. INSPECTION OF PARTIALLY VISIBLE TRACK.

a. At locations where vegetation, dirt, debris, or other undesirable materials cover the ties and/or rail preventing effective track inspection, the undesirable material shall be removed and a thorough track inspection performed.

b. At locations where ballast or other material is installed to meet operational requirements, sufficient material shall be removed to spot check trackage in accordance with NAVFACINST 11230.1.

c. ***Paved Areas -***

(1) In road crossings and other paved areas where complete inspection of the track is not possible, the designated track inspector must be alert for external signs of track deterioration. External signs indicating track deterioration are:

(a) Changes in gage and/or crosslevel.

(b) Settlement of the rails (changes in track profile).

(c) Excessive vertical movement of the rails as a train passes.

(d) Deterioration (cracking or breaking up) of the pavement in the vicinity of the track.

(2) Based on indication of defects with consideration taken for age and usage, activities shall establish a program to spot check trackage encased in pavement in accordance with NAVFACINST 11230.1.

(3) *Operating Restrictions for Track in Pavement* - When external signs of track deterioration develop, particular attention should be given to the track geometry measurements through the paved area. Track geometry measurements, combined with visual indications of lateral and vertical movement, and the requirements for road crossing flangeways shall be used to assign operating restrictions for the track through the paved area.

2-4. TRACK MAPS. Track maps are essential in identifying and locating the components of the track network. Installations shall maintain a complete, accurate, and up-to-date set of track maps for use by maintenance and engineering personnel. Track charts, as described in MO-103 and NAVFACINST 11230.1, may be used to supplement track maps, if desired.

Criteria:

a. ***Scale.*** Track maps should be drawn to a legible scale. The scale should be shown on each page of the map.

b. ***Title.*** Track maps should contain a standard title block.

c. ***Legend.*** Track maps should contain a legend identifying all symbols used in the track map.

d. ***Track data.*** Data presented on track maps should include:

(1) All track, active and inactive.

(2) Track name or identification for each track.

(3) Track category for each track.

(4) Buildings, loading docks, bridges, trestles, culverts, and other structures on or adjacent to the railroad roadway.

(5) Highway and road crossings.

(6) Connections to serving railroads.

(7) Limits of Navy track ownership and maintenance responsibilities.

(8) Installation property lines and railroad right-of-way lines.

(9) Rail weight.

(10) Turnout identification.

(11) Degree of curvature for all curves.

(12) Grades and profile information.

(13) Track stationing or mileposts.

CHAPTER 3
Roadway

3-1. ROADWAY.

a. ***Inspection.*** The roadway shall be inspected for the following defects:

(1) Ballast/subgrade pumping.

(2) Erosion of embankments and cut slopes.

(3) Embankment sliding or slippage.

(4) Potential slope stability problems.

(5) Settlement at approaches to bridge ends.

(6) Washouts under the track.

If any of these are present, remedial action is required within a time frame necessary to prevent damage to the track structure.

b. ***Hazardous conditions.*** Any condition presenting a hazard to the safe movement of trains shall be corrected prior to the first movement over that location.

3-2. DRAINAGE.

a. ***General.***

(1) A well-drained roadbed is essential to good track maintenance.

(2) Any attempts to divert water onto the roadway or to obstruct ditches or drainage structures shall be reported immediately to the Trackage Certifying Official.

(3) Drains, ditches, and other open drainage structures shall be protected to prevent hazards to personnel.

b. ***Size and design.*** Ditches and other drainage structures (culverts, drains, and drop inlets) shall be of sufficient size and construction to handle the expected flow of water, in accordance with Military Handbook (MIL-HDBK) 1005/3 "Drainage System."

c. ***Obstructions.*** Ditches and drainage structures shall be maintained to allow the free passage of water. At locations where flow is obstructed or otherwise inadequate, remedial action is required. During construction operations adjacent to the track structure all ditches and other drainage structures shall be kept unobstructed.

d. ***Inspection.***

(1) Inspection and cleaning of drainage structures and channels shall be performed at least annually.

(2) Inspections of ditches and other drainage structures during and after heavy rains are recommended to assure that these structures are adequate to carry the runoff.

(3) Drainage ditches and structures shall be inspected for the presence of:

(a) Brush.

(b) Drift.

(c) Excessive ice and snow.

(d) Other obstructions which may interfere with the flow of water.

If any of these are present, immediate remedial action is required to prevent damage to the roadway and track structure.

(4) Particular attention shall be given to drainage conditions at turnouts, rail crossings, road crossings, bridge ends, and all locations where conditions may restrict adequate drainage.

3-3. VEGETATION.

a. Vegetation shall be controlled so that it does not:

(1) Grow within the ballast section or obstruct ballast drainage.

(2) Interfere with adequate visibility at grade crossings.

(3) Obstruct visibility of location markers, switch position indicators, signs, or signals.

(4) Obstruct drainage.

(5) Interfere with the safe operation of trains.

(6) Prevent proper track inspection.

(7) Present a fire hazard to timber structures.

(8) Interfere with personnel walking within 8 feet of the track centerline.

(9) Brush the sides of rolling stock.

b. ***Vegetation control.*** Undesirable vegetation growing within the roadway shall be removed by chemical or manual means. Chemical vegetation control shall be accomplished as prescribed by OPNAVINST 6250.4 "Pest Management Program" and NAVFAC MO-314 "Weed Control and Plant Growth Regulation."

c. ***Desirable vegetation.*** Vegetation may be planted and grown on the slopes of cuts and fills and in other locations within the roadway to prevent erosion. The growth of desirable vegetation should be controlled to meet the requirements of paragraph 3-3.a.

CHAPTER 4
Ballast

4-1. GENERAL.

Ballast is a select material placed on the subgrade to:

a. Restrain the track laterally, longitudinally, and vertically under the dynamic loads imposed by trains and the thermal stresses induced in the rails by changing temperature.

b. Provide adequate drainage of the track.

c. Distribute the load of the track and trains to prevent overstressing the subgrade.

4-2. SELECTION CRITERIA.

a. Considerations for selecting materials to be used as ballast include:

(1) Size and gradation.
(2) Shape (angularity).
(3) Weight.
(4) Strength.
(5) Durability.
(6) Cleanliness.
(7) Economics.

b. New ballast materials used in the maintenance of track shall meet the requirements specified in the AREMA "Manual For Railway Engineering", Chapter 1, part 2, for the gradation requirements given in Table 4-1.

4-3. MAINTENANCE.

a. The ballast section should be clean, free draining, and free of vegetation, soil (mud), and other foreign materials.

b. During major maintenance or track rehabilitation, dirty or fouled crushed stone or slag ballast meeting the requirements of paragraph 4-2.b. may be cleaned or reconditioned and reused.

c. Ballast materials shall provide a full crib and uniform shoulders, but shall not be allowed to cover or be at a level above the top of the ties. At turnouts, ballast shall not interfere with moveable parts of switches and sufficient clearance maintained around switch rods and connecting rods. See paragraph 8-3.h., Pocketing Switches

Table 4-1

AREA Recommended Gradation for Ballast

Size No.	Nominal Size Square Opening in.	Amounts Finer than Each Sieve (Square Opening) Percent by Weight							
		2-1/2 in.	2 in.	1-1/2 in.	1 in.	3/4 in.	1/2 in.	3/8 in.	No. 4
3	2 to 1	100	95-100	35-70	0-15		0-5		
4A	2 to 3/4	100	90-100	60-90	10-35	0-10		0-3	
4	1-1/2 to 3/4		100	90-100	20-55	0-15		0-5	
5	1 to 3/8			100	90-100	40-75	15-35	0-15	0-5

Note: Size No. 3, 4A and 4 are typically mainline ballast materials.

Size No. 5 is typically yard ballast material.

CHAPTER 5
Ties

5-1. GENERAL.

a. The functions of a tie are to:

(1) Maintain gage.

(2) Maintain surface.

(3) Maintain alignment.

(4) Distribute the load from the rail to the ballast and subgrade. The inability of a tie to adequately perform any of the above functions constitutes a defective tie.

5-2. WOOD TIES.

a. ***Tie selection and treatment.***

(1) *Tie selection.* New ties selected for use in the maintenance of track shall meet the requirements specified in the AREMA "Manual For Railway Engineering", Chapter 30, part 1 for 6-inch grade and 7-inch grade ties. The preferred species for ties are the following hardwoods: Red Oak and White Oak. Where softwoods are used, the Pine and Fir species are preferred.

(2) *Treatment.* Ties shall be pressure treated

in accordance with the most current version of American Wood Preserver's Association (AWPA) Standard C6. As a general recommendation, the preferred preservative for ties is a creosote-coal tar

solution (60/40) as specified in AWPA Standard P2, "Standard for Creosote and Creosote Solutions." For ties used West of the Mississippi River where attack of the wood by organisms such as fungi and termites is generally not as severe, a creosote-petroleum solution (50/50) as specified in AWPA Standard P3, "Standard for Creosote-Petroleum Oil Solution" may be used.

(3) *Switch ties.* It is recommended that switch ties be hardwood selected from the list of preferred species given in paragraph 5-2.a.(1).

(4) Additional information concerning tie selection and treatment is provided in MO-312 (Wood Protection). Acceptance of ties should be in accordance with MO-312.2 (Receipt and Inspection of Treated Wood Products by Installation Personnel).

b. ***Installation.*** Ties shall be installed perpendicular to the rails and properly tamped and spiked. Ties shall be installed with the top of the tie (or the tie plate) in full contact with the base of the rail and the bottom of the tie near the rail seat in full contact with the ballast.

c. ***Identification of defective wood ties.*** A wood tie is defective if it is:

(1) Broken through.

(2) Split or otherwise impaired to the extent that it will not hold spikes or other rail fasteners.

(3) So deteriorated that the tie plate can move laterally more than 1/2 inch relative to the crosstie.

(4) Cut by the tie plate more than 2 inches.

(5) Cut by wheel flanges, dragging equipment, fire, etc., to a depth of more than 2 inches within 12 inches of the base of the rail, frog, or load-bearing area.

(6) Rotted, hollow, or generally deteriorated to a point where a substantial amount of the material is decayed or missing.

These defects are shown in Figure 5-1.

5-3. CONCRETE TIES.

a. ***Tie Selection.*** New concrete ties selected for use in the maintenance of track shall meet the requirements specified in AREA Manual for Railway Engineering, Chapter 30, Part 12.

b. ***Switch Ties.*** At this time, few concrete switch ties are being manufactured. Due to weight and difficulty in handling, wood switch ties are recommended.

c. ***Installation.*** Ties shall be installed perpendicular to the rails and properly tamped and fastened. Ties shall be installed with the top of the tie in full

contact with the base of the rail and the bottom of the tie near the rail seat in full contact with the ballast.

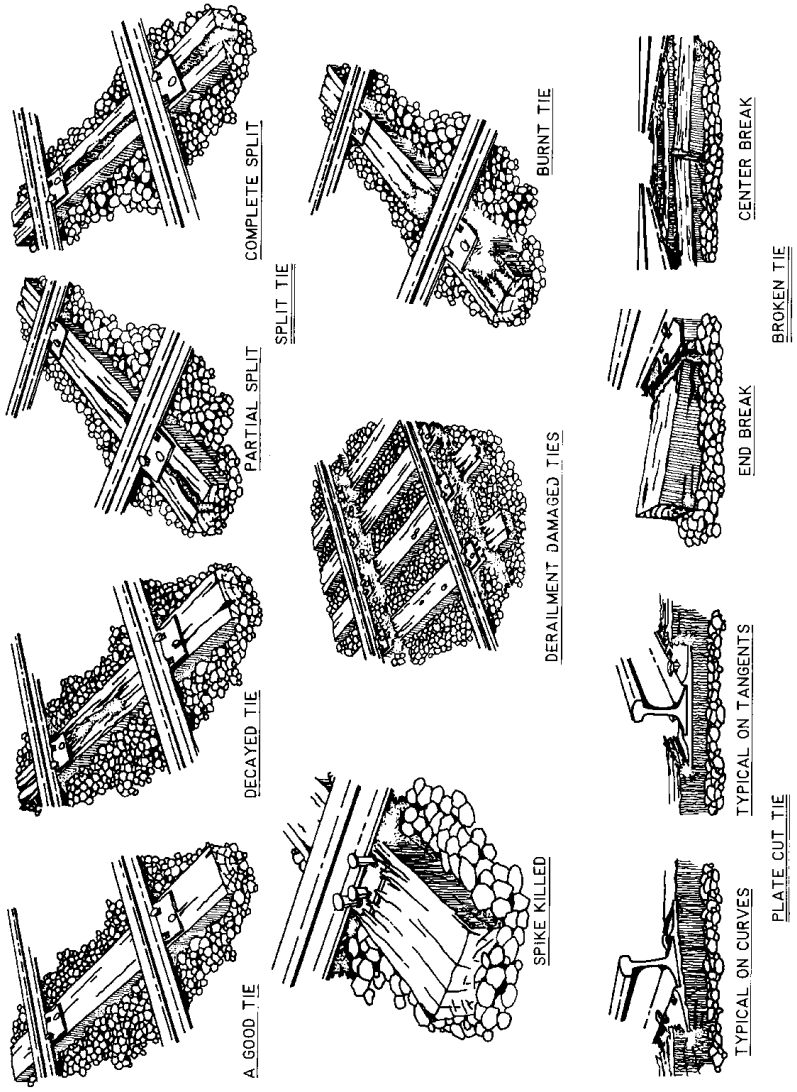

Figure 5-1. Examples of good and defective ties

d. ***Identification of defective concrete ties.*** A concrete tie is defective if:

(1) Tie is broken across under one or both rail seats.

(2) Tie is broken across in the center and showing signs of further deterioration, loss of tension in prestressing wires, exposure of wires, crumbling, etc.

(3) Tie is broken longitudinally resulting in loss of ability to hold one or both cast-shoulders in place.

(4) Both cast-shoulders in one rail loose. (One loose shoulder per rail is not sufficient cause for removal unless it is causing some distress to adjacent ties.)

(5) Tie is damaged by derailment or dragging equipment which, in the opinion of the track inspector, should be replaced. It should be noted that quite serious damage can be done to the tie ends without seriously affecting the performance of the tie.

5-4. GENERAL.

a. ***Improper tie support (down or hanging ties).*** Ties that do not support both rails are considered defective. If these ties are not materially defective (see paragraph 5-2.c. and 5-3.d.), they shall be ballasted, tamped up, and respiked/refastened to fully support the rails.

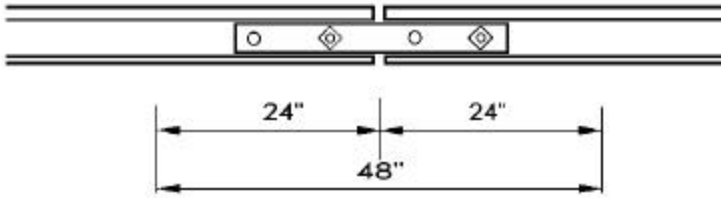

AT EACH JOINT, AT LEAST ONE TIE WITHIN THIS AREA MUST BE NON-DEFECTIVE.

b. ***Improperly spiked wood ties***. Ties that are installed but not spiked with a sufficient number of spikes in accordance with paragraph 6-3.c. are considered defective. If these ties are not materially defective (see paragraph 5-2.c.), necessary spikes shall be added.

c. ***Tie requirements***.

(1) Track shall have a minimum number of non-defective ties per 39-ft rail length in combination with a maximum number of consecutive defective ties as specified below:

	Minimum Number of Non-Defective Ties per 39 ft	
Track Category	Tangent and Curves Less Than 2°	Curves Greater Than 2°
A	12	13
B	10	11
C	8	9

	Maximum Number of Consecutive Defective Ties	
Track	Tangent and Curves	Curves Greater

Category	Less Than 2°	Than 2°
A	2	1
B	2	1
C	3	2

Figure 5-2 Required tie support at joints.

(2) *Joint ties.* All joints shall be supported by the number of nondefective ties specified below. The centerline of these joint ties shall be within 24 inches of the rail ends as shown in Figure 5-2

Track Category	Number of Nondefective Joint Ties
A	2
B	1
C	1

d. ***Tie spacing***. The maximum average center-to-center tie spacing shall be 24 inches within the distance of a rail length. Recommended tie spacings are as follows:

Track Category	Tie Spacing (inches)	Number of Ties per Rail Length		
		39-ft	33-ft	30-ft
A	19.5	24	20	18
B	21	22	19	17
C	24	20	17	15

For track having an average tie spacing greater than 24 inches, the desired spacing should be established during the next major maintenance or rehabilitation cycle.

e. ***Missing ties***. Missing ties shall be replaced.

f. ***Skewed ties***. A skewed tie is a tie which is not perpendicular to the rails. Slightly skewed, or individual skewed ties are not serious. A section of track with skewed ties indicates a problem area that should be investigated (See “Track Geometry,” Chapter 12). Where localized areas have 3 or more ties skewed greater than 8 inches, the cause of the skewing shall be corrected and the ties straightened.

CHAPTER 6

Tie Plates, Rail Fastenings, and Other Track Materials

6-1. GENERAL.

a. Tie plates, rail fastenings, and other track materials shall be the proper size and type as specified in MIL-HDBK 1005/6, Section 6, and MO-103 and shall conform to the requirements of Chapters 4 and 5 of the AREMA "Manual For Railway Engineering".

b. Tie plates, rail fastenings, and other track materials shall not be flame cut or otherwise altered.

c. Tie plates, rail fastenings, and other track materials which are of improper type, broken, or otherwise defective shall be replaced with the proper size and type material.

6-2. TIE PLATES.

a. ***Use.*** Tie plates distribute the applied loads from the rail to the tie as well as assist in keeping the rail in position. Their use is especially important on curves where they provide additional lateral restraint.

b. ***Type.*** Tie plates may be of either the single shoulder type (Figure 6-1) or the double shoulder type (Figure 6-2).

Figure 6-1. Single shoulder tie plate

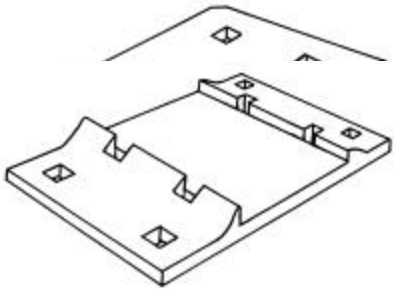

Figure 6-2. Double shoulder tie plate

c. ***Installation.*** For track without tie plates, plates shall be installed on replacement ties during tie renewals or installed during rail replacement.

d. ***Shifted Plates***. Where the shoulder of a tie plate has become lodged beneath the base of the rail, the spikes shall be pulled, the tie plate properly reset, and the rail respiked.

6-3. SPIKES.

a. The rail shall have a sufficient number of fasteners (spikes) to effectively maintain gage and provide sufficient rail restraint.

b. Spikes shall be:

(1) Of proper size for the tie plates used.

(2) Driven vertical and square with the rail.

(3) Either of the cut or screw type.

(4) Driven with approximately 1/8 (0.125) inch of space remaining between the head of the spike and the base of the rail.

c. ***Spiking pattern.***

(1) On tangent track and curves of 6 degrees or less, spikes shall be installed as shown in Figure 6-3.

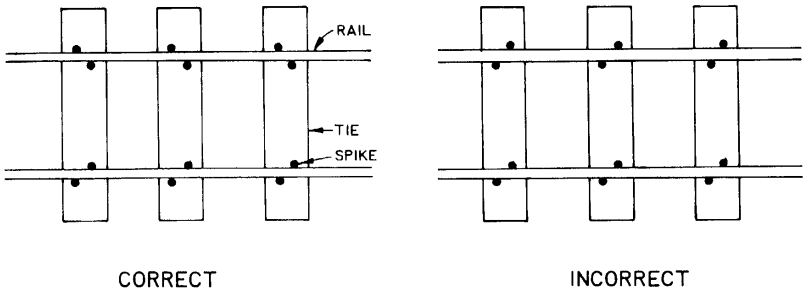

Figure 6-3. Spiking pattern for tangents and curves of

6 degrees or less

(2) On curves greater than 6 degrees but less than 16 degrees and on the curved side of turnouts, the use of an additional spike per tie plate as shown in Figure 6-4 is recommended.

(3) On curves of 16 degrees and greater the use of 2 additional spikes per tie plate as shown in Figure 6-5 is recommended.

(4) Spikes in angle bars. Spikes shall not be installed through the slots in skirted-type, slotted joint bars (angle bars) as shown in Figure 6-6. Correct spiking is shown in Figure 6-7.

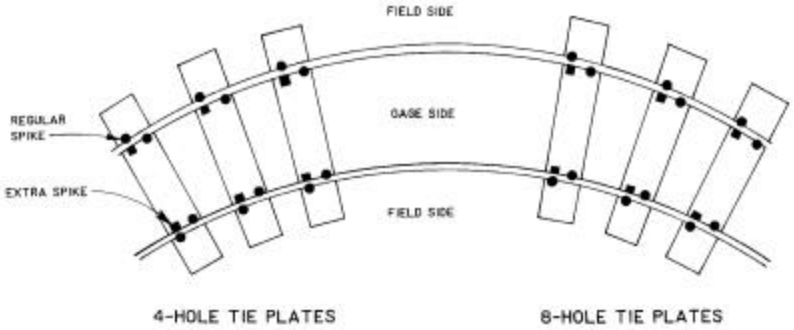

Figure 6-4. Spiking pattern for curves greater than 6 degrees but less than 16 degrees

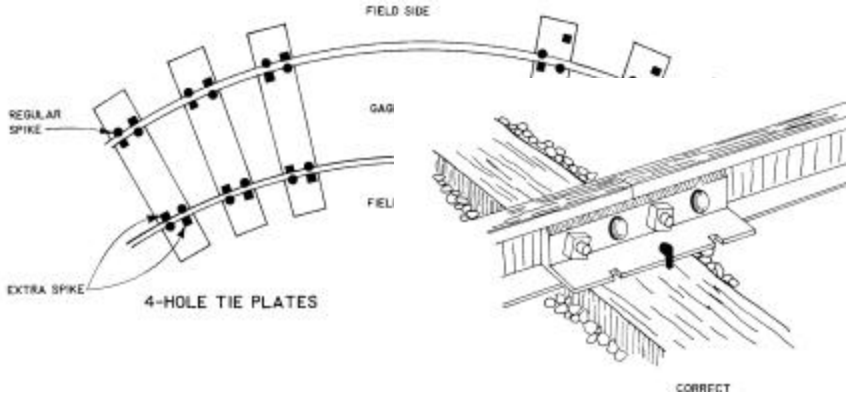

Figure 6-5. Spiking pattern for curves 16 degrees and greater.

(5) Correction of incorrect spiking patterns. An incorrect spiking pattern by itself is not a cause for

removing and redriving spikes. However, an incorrect spiking pattern shall be corrected when other maintenance requires the spikes to be removed. Old spike holes shall be plugged to prevent accelerated tie deterioration.

d. ***Missing and loose spikes.*** Missing spikes shall be replaced. Old spike holes shall be plugged with a treated tie plug prior to replacing the spikes. Loose

Figure 6-6. Incorrect spiking of angle bars

Figure 6-7. Correct spiking of angle bars

spikes shall be removed, the holes plugged, and the spikes redriven.

e. ***Spikes beneath rail base.*** Where the head of a spike has become lodged beneath the base of a rail, the spike shall be removed and properly redriven. A spike lodged beneath the rail base is an undesirable condition that can lead to a broken rail base.

6-4. JOINTS.

a. ***Joint bars.*** Rails shall be joined with proper factory designed and constructed joint bars. Joint bars may not be altered with a flame in any manner, including the bolt holes. Joint bars not meeting these requirements shall be replaced.

b. ***Compromise joints.*** Rails of different size or section shall be joined with proper factory designed and constructed compromise bars, taper rails, or offset welds.

c. ***Cracked or broken joint bars.*** Cracked or broken joint bars shall be replaced.

d. ***Bolts.*** Each joint shall be bolted with at least two bolts in each rail.

(1) All bolts shall be of proper size and tightly in place. Proper bolt installation is shown in Figure 6-8.

(2) Bolts shall be installed with spring lock washers. Nuts shall be installed against the spring lock

washer as shown in Figure 6-8. At least one full bolt thread shall extend past the outside of the nut.

(3) Bolts shall be installed so that the nuts will be alternately on the inside and outside of the rail as shown in Figure 6-9.

(4) Whenever bolts and joint bars are removed, the rail in the joint area and the contact surfaces of the joint bar shall be cleaned (wire brushed)

CHAPTER 8
Turnouts

8-1. GENERAL.

Turnouts are designed to divert trains from one track to another. Good turnout maintenance is essential for the safe and efficient operation of trains. Major components of a turnout are the switch, frog, and guard rails. Figure 8-1 shows a typical split switch turnout with the various parts identified. Tongue and mate switches used in paved areas are also commonly found in Naval activities trackage.

8-2. GENERAL REQUIREMENTS.

a. ***Materials***. All materials used within the limits of a turnout shall:

(1) Be factory designed and constructed.
(2) Be the proper type and size.
(3) Be properly installed.
(4) Not be flame cut or otherwise altered.

b. ***Rail.*** All rail used within the limits of a turnout shall be of the same weight and section. Compromise joints are not permitted within the limits of a turnout.

c. ***Ties.*** The standards in Chapter 5 of this manual shall apply to ties within the limits of a turnout.

Figure 8-1. Parts of a turnout (Continued)

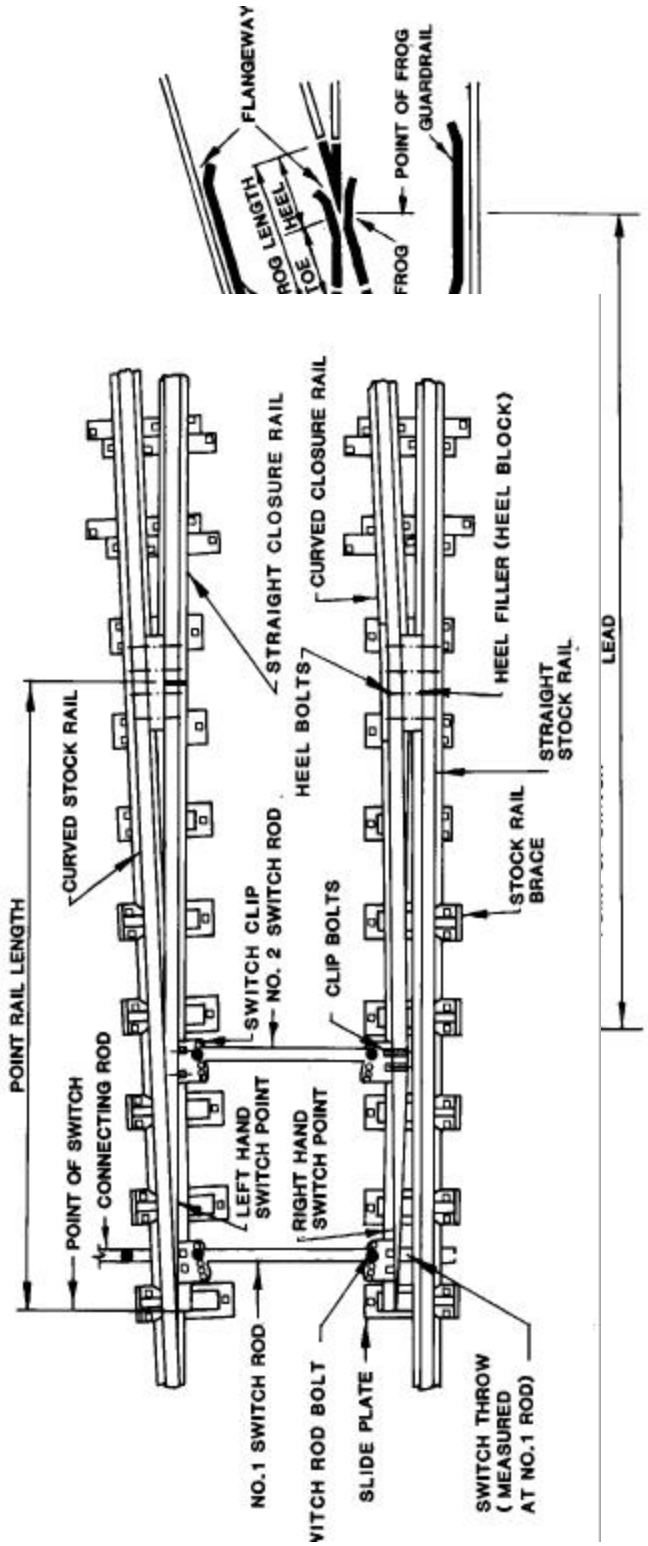

Figure 8-1. Parts of a turnout (Concluded)

d. ***Track geometry***. Turnout track geometry shall conform with the standards in Chapter 12 as well as those in this chapter.

e. ***Reversing tangent.*** It is recommended that the tangent between the frog and any reverse curve past the frog be no less than 50 feet in length as shown in Figure 8-2.

f. ***Switch stand placement.***

(1) The switch stand shall be installed so that when the switch is lined for the normal (main) route, the connecting rod keeps the points closed with a pulling (rather than a pushing) force. In most cases this will mean installing the stand on the diverging side of the turnout as shown in Figure 8-2.

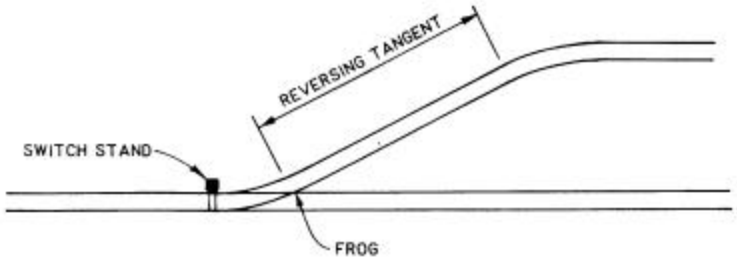

Figure 8-2. Reversing tangent length and switch stand placement

(2) When a ground-throw stand is used, the handle shall point toward the frog when the switch is lined for the normal (main) route.

g. ***Cleaning, lubrication, and adjustment***. As scheduled, but at least annually, switches and switch stands shall be cleaned, lubricated, and adjusted. See NAVFACINST 11230.1.

8-3. SWITCHES AND SWITCH STANDS.

a. Switches shall be inspected for the following defects:

(1) Switch difficult to operate.

(2) Gap between the switch point and the stock rail. Checked with points in both positions. (See paragraph 8-3.b.)

(3) Worn or chipped switch points. (See paragraph 8-3.c.)

(4) Point of switch higher than stock rail. (See paragraph 8-3.d.(1).)

(5) Point rail beyond taper lower than stock rail. (See paragraph 8-3.d.(2).)

(6) Damaged or missing switch stand lever latches or switch point lock. (See paragraph 8-3.e.)

(7) Insecure, loose, damaged, or improperly installed switch stand. (See paragraph 8-3.f and 8-2.g.)

(8) Loose, damaged, or missing jam nut at the switch stand end of the connecting rod. (See paragraph 8-3.g.(3))

(9) Bent, damaged, loose, binding, or improperly installed connecting rod, switch rods, or switch clips. (See paragraph 8-3.g.)

(10) Loose, damaged, or missing switch clip, switch rod, or connecting rod bolts. (See paragraph 8-3.g.)

(11) Loose, damaged, or missing heel bolts; cracked or improper heel joint bars or heel filler. (See paragraph 8-3.j.)

(12) Loose, damaged, or missing rail braces. (See paragraph 8-3.k.)

(13) Loose, damaged, or missing slide plates; dirt and debris buildup on slide plates.

(14) Missing cotter keys on switch rod and switch clip bolts. (See paragraph 8-3.i.)

(15) Debris in flangeways. (See paragraph 8-3.l.)

(16) Debris obstructing switch rods and connecting rod. (See paragraph 8-3.h.)

b. ***Switch point gap.*** For Category A, B, and C track, if the switch can be thrown and locked in either direction with a 1/8 inch spacer between the switch point and the stock rail, Adjustment is required.

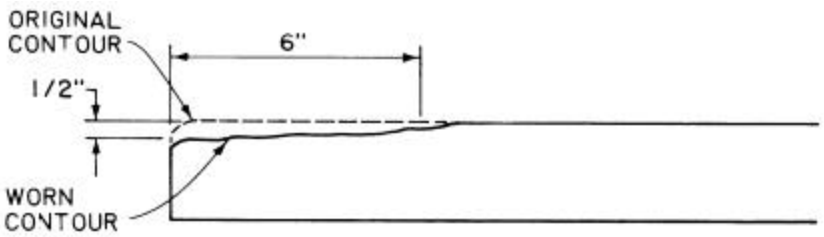

Figure 8-3. Switch Point Contour.

c. ***Switch points.*** A switch point shall be restored or replaced if the point is chipped, broken, or worn more than 1/2 inch down and 6 inches back from the point. (See Fig 8-3). Metal flow shall be removed to ensure proper closure.

d. Figure 8-4 shows the proper elevation of the switch point and point rail with respect to the stock rail.

(1) The top surface of the switch point shall not be higher than the top of the stock rail.

(2) The point rail beyond the taper shall not be lower than the stock rail.

e. ***Switch stand lever latches and point locks.*** Switch stand lever latches shall be installed on all switches. Latches that are missing, damaged, insecure, or otherwise inoperative, shall be repaired.

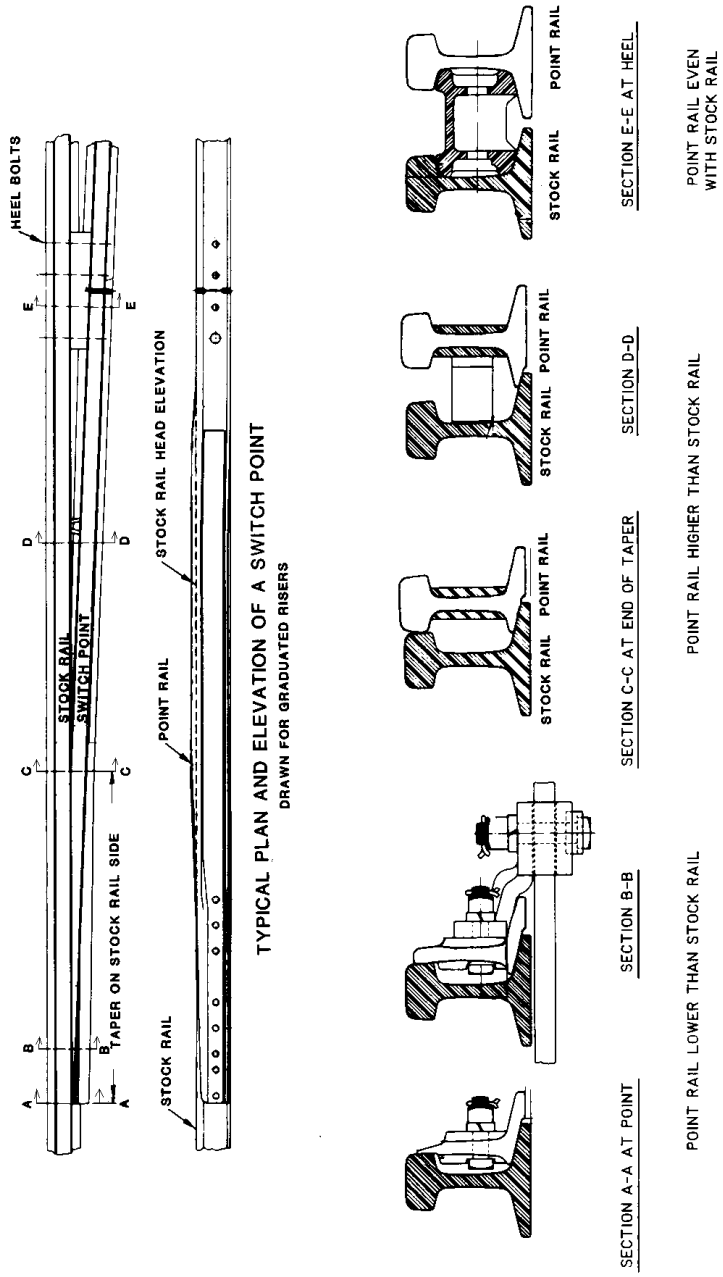

Figure 8-4. Switch point plan and elevation.

f. ***Switch stand.*** The switch stand shall be fully secured to the headblock ties to prevent any unintentional movement of the switch points. Where operations through the switch result in visible lateral movement of the switch stand or opening of the switch points (point gap), the switch will be checked in accordance with paragraph 8-3.b.

g. ***Connecting rod, switch rods, and switch clips.***

(1) These parts shall be installed and maintained to allow unobstructed motion when the switch is thrown. Rods and clips shall not contact adjacent ties. Damaged parts shall be replaced, and improperly installed parts shall be adjusted. Washers or similar spacers shall not be permitted between the switch clip and the switch point.

(2) If the connecting rod, switch rod, or switch clip is insecurely fastened or is damaged, operations through the turnout shall not be permitted.

(3) The jam nut at the switch stand end of the connecting rod shall be kept tight against the switch stand clevis.

h. ***Pocketing Switches***. Ballast shall not be allowed at a level that will interfere with the smooth operation of the switch.

(1) The ballast level in cribs beneath the connecting rod, switch point rails, and switch rods should be at least 2 inches below any steel. In regions

where ice and snow accumulation is a problem at least 4 inches clearance should be provided.

(2) For switches where this clearance is not provided, the cribs shall be pocketed to provide adequate clearance.

i. ***Connecting rod bolts, switch rod bolts, and clip bolts.*** Connecting rod and switch rod bolts shall be installed with the nut on top and cotter keys in place. Clip bolts shall have cotter keys. All bolts shall be kept tight.

j. ***Switch heel (bolts, fillers, and joint bars).*** The heel of the switch shall be secure and the supporting switch ties solidly tamped. The inside joint bar (nearest the track center) should be a bent bar per AREMA design. If any heel bolts are loose or missing, or the heel is otherwise not fully secure, heel bolts shall be tightened or replaced and the heel properly secured.

k. ***Rail braces.***

(1) Rail braces are essential to provide proper lateral support to the stock rails. Rail braces shall be

fully secured to the tie and tight against the outside of the stock rail on both sides of the turnout.

(2) Rail braces should be installed in accordance with the appropriate plans for a given length switch point found in the AREMA "Portfolio of Track Plans".

l. ***Debris in flangeways.*** Flangeways shall be kept clear of debris. Any obstructions, including ice and packed snow, shall be removed.

8-4. FROGS.

a. ***Frog point.*** A frog shall be restored if the point is chipped, broken, or worn more than 1/2 inch below the original top surface and 6 inches back from the original point location. (See Figure 8-5)

b. ***Frog tread surface.*** In category A and B track, a frog shall be restored when the tread surface is worn more than 5/16 inch below its original contour. In category C track, a frog shall be restored when the tread surface is worn 3/8 inch below its original contour. (See Figure 8-5)

c. Frogs that cannot be rebuilt and restored to a

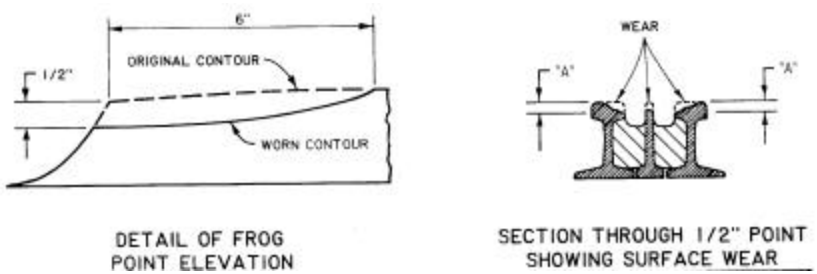

like new condition shall be replaced.

Figure 8-5. Frog point and tread contours

d. ***Guarding face of self-guarded frogs.*** The raised guarding face on a self-guarded frog shall not be

worn more than 5/16 inch. (See Figure 8-6)

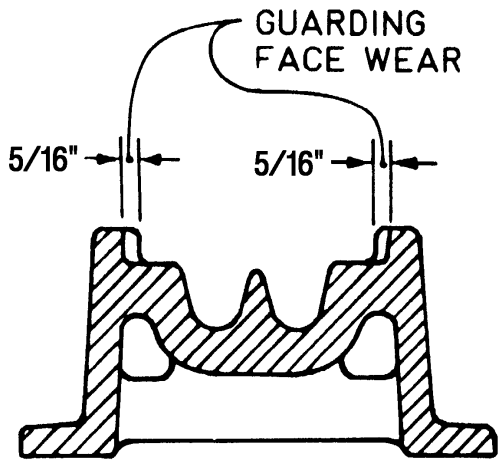

Figure 8-6. Allowable wear on guarding face of self-guarded frog

e. ***Repairing self-guarded frogs.*** If repairs are made to a self-guarded frog without removing it from service, the raised guarding face must be restored before rebuilding the point.

f. ***Frog bolts***. All frog bolts shall be in place and tight.

g. ***Frog flangeway width.*** Standard frog flangeway width is 1-7/8 inches. Standards for frog flangeway width are presented in Table 8-1. (See Figure 8-7)

h. ***Flangeway depth.*** Standard frog flangeway depth is 1-7/8 inches. Standards for frog flangeway

depth are presented in Table 8-1. (See Figure 8-7)

8-5. GUARD RAILS.

a. Guard rails shall be in place, properly positioned, and fully secured.

b. Guard rails shall be installed so that the straight guarding face (the portion of the guard rail parallel with the running rail) extends in advance of the frog point a distance at least equal the values given in Table 8-2.

Table 8-1
Measurements and Operating Restrictions for Frogs and Guard Rails

Parameter	Measurement: Standard (New or Fully Restored)	Operating Restrictions: 10 mph	Operating Restrictions: No Operations
Frog Flangeways:			
Width	1-7/8 in. (1.875 in.)	LT 1-5/8 in. (1.625 in.)	LT 1-1/2 in. (1.50 in.)
Depth	GE 1-7/8 in. (1.875 in.)	LT 1-1/2 in. (1.50 in.)	LT 1-3/8 in. (1.375 in.)
Guard Check Gage	54-5/8 in. (54.625 in.)	LT 54-1/4 in. (54.25 in.)	LT 54-1/8 in. (54.125 in.)
Guard Face Gage	52-3/4 in. (52.75 in.)	GT 53-1/8 in. (53.1245 in.)	GT 53-1/4 in. (53.25 in.)
Guard Rail Flangeway:			
Width	1-7/8 in. (1.875 in.)	LT 1-5/8 in. (1.625 in.)	LT 1-1/2 in. (1.50 in.)

Note: GE = greater than or equal to, LT = less than, GT = greater than

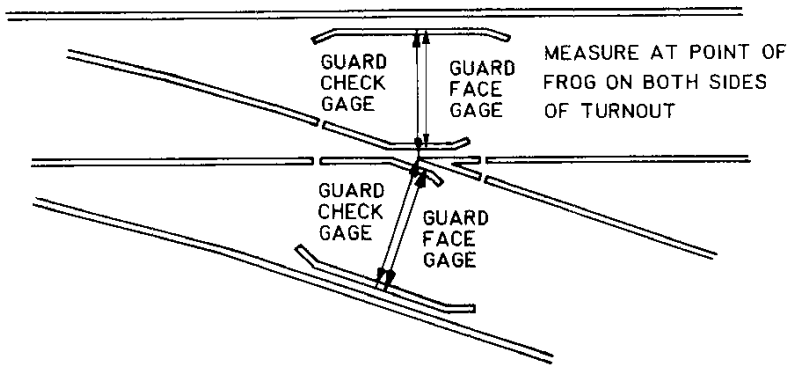

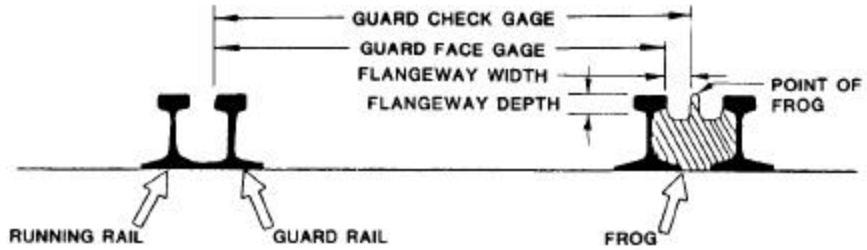

Figure 8-7. Measurement of flangeway width, flange- way depth, guard check gage, and guard face gage

Table 8-2 Minimum length of straight guarding face in advance of frog point

Frog Number	Length
4, 5, 6, 7, 8, 9, 10	14 in.
11, 12, 14	18 in.
15, 16	26 in.
18, 20	30 in.

c. ***Guard check gage.*** Standard guard check gage is 54-5/8 inches. Standards for guard check gage are presented in Table 8-1. (See Figure 8-7)

d. ***Guard face gage***. Standard guard face gage is 52-3/4 inches. Standards for guard face gage are presented in Table 8-1. (See Figure 8-7)

e. ***Guardrail Flangeway width.***

(1) Standard guard rail flangeway width is 1-7/8 inches. Standards for guard rail flangeway width are presented in Table 8-1. (See Figure 8-7).

(2) Excessive wear on a guardrail is often indicated by a wide guardrail flangeway measurement or by tight guard check gage. Typically, guardrail flangeway widths of 2-1/8 inch or greater indicate that maintenance or replacement of the guardrail is needed.

CHAPTER 9
Rail Crossings

9-1. GENERAL.

Rail crossings are designed to carry one track across another at grade.

9-2. REQUIREMENTS.

a. ***Size.*** Rail crossings shall be the proper size and section for the rails being joined.

b. ***Flangeway width and depth***. Standards for rail crossing flangeways are identical to the frog flangeway standards given in Table 8-1 and shall be used.

c. ***Debris in flangeways.*** Flangeways shall be kept clear of debris. Any obstructions, including ice and packed snow, shall be removed.

d. ***Bolts.*** All crossing bolts shall be in place and tight. Loose bolts shall be tightened, and bolts which cannot be tightened shall be replaced. Missing bolts shall be replaced.

9-3. ANCHORS.

Where rail anchors are used on track approaching rail crossings, every third tie should be box anchored (four anchors per tie) for at least two rail lengths in all directions from the crossing.

CHAPTER 10
Road Crossings

10-1. DRAINAGE.

a. Adequate drainage is essential for satisfactory long-term performance of the track and road crossing.

b. Water shall not be allowed to pond on or near the track at a road crossing.

c. Catch-basins, gutters, ditches, subdrains, and culverts should be properly installed and kept free of debris.

10-2. FLANGEWAYS.

a. ***Flangeway width.*** For normal operations, flangeway width in a road crossing shall not be less than 2-1/2 inches nor greater than 3 inches.

b. ***Flangeway depth.*** For normal operations, the flangeway depth in a road crossing shall not be less than 2 inches.

c. ***Debris.*** Flangeways shall be kept clear of debris. Any obstructions, including ice and packed snow, shall be removed immediately.

10-3. TRACK.

a. ***Ties, tie plates, and spikes.*** When crossings are rebuilt, all ties within the crossing limits and for at least 20 feet beyond each end of the crossing shall be replaced, fully tie plated, and spiked with eight rail-

holding spikes on each tie (see Figure 10-1). For crossings carrying large volumes of traffic and/or heavy loads, the use of hardwood ties is recommended.

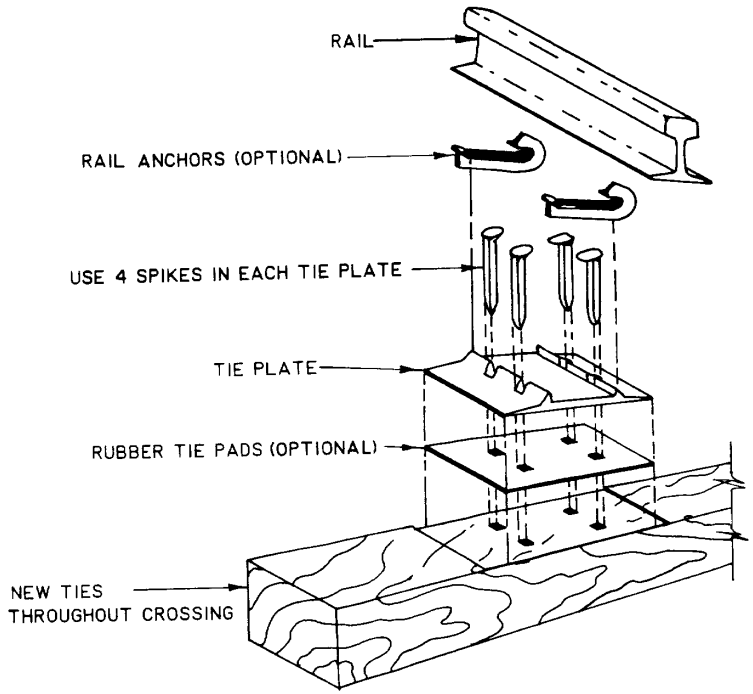

Figure 10-1. Track construction for road crossing

b. ***Joints***. Bolted rail joints are not desirable in road crossings. When crossings are rebuilt, it is recommended that all joints within the crossing and up to 20 feet outside the crossing be welded.

c. ***Rail anchors.*** Where the track on either side of the crossing is anchored, it is recommended that the anchoring pattern be continued through the crossing.

10-4. CROSSING SURFACES AND MATERIALS.

a. It is essential that the crossing surface be maintained to provide a smooth crossing for vehicles and to prevent vehicle tires from striking the rails. The crossing surface shall be maintained at an elevation level with or slightly (not more than 1/4 inch) above the top of the rails. Additionally, there shall be a smooth transition between the crossing surface and the adjoining pavement.

b. During routine track inspections the inspector should take note of the general condition of the crossing materials and report any damage or condition requiring repair or replacement. Any condition observed in a road crossing which would cause a hazard to motor vehicles using the crossing should be corrected immediately.

10-5. GRADE CROSSING PROTECTION - SIGNS AND SIGNALS. During routine track inspections, the inspector should observe the condition of all whistle posts, highway warning signs and crossbucks, and signals. Signs and signals should be easily legible and clearly visible to the highway user. Signs and signals shall conform to the requirements of the Federal Highway

Administration (FHA) Manual on Uniform Traffic Control Devices (MUTCD), Part 8, “Traffic Controls for Highway-Rail Grade Crossings”. Additional

guidance may be obtained from the FHA "Railroad-Highway Grade Crossing Handbook.

10-6. ELECTRIC/ELECTROMECHANICAL GRADE CROSSING SIGNALS. Inspection and maintenance of electric and/or electromechanical signals should conform to manufacturer's recommendations, state/local requirements, and the FRA Part 234 "Grade Crossing Signal System Safety". Paragraph 10-6.a and b. summarize the minimum requirements of the FRA standards. The inspections and tests described are performed to determine if the warning system and its component parts are maintained in a condition to perform their intended function. Any electromagnetic device, relay or other electromagnetic device that fails to meet the requirements of the tests shall be removed from service until corrected. All reference to "system" in the remainder of this section shall refer to the grade crossing signal system.

a. ***Maintenance Standards***

(1) *Location of Plans* – Plans required for proper maintenance and testing shall be kept at each system location (equipment cabinet). Plans shall be

legible and correct.

(2) All control circuits shall operate on a fail-safe principle.

(3) Operating characteristics of electromagnetic, electronic, or electrical apparatus shall be maintained in accordance with the limits within which the system is designed to operate.

(4) When any essential component fails to perform its intended function, the cause shall be determined and the faulty component adjusted, repaired, or replaced immediately. Until repair is completed, appropriate action to flag vehicular traffic in accordance with paragraph 3.3.f of NAVFAC P-301 or activity regulations will be complied with.

(5) During testing or performing work on signals or track structure, which affects the integrity of the warning system, alternative methods must be provided to maintain safety for the highway user. Immediately after repairs, adjustments, or replacement have been completed, an appropriate test of the affected equipment must be made to verify that the system is operating, as intended.

(6) Highway-rail grade crossing warning system apparatus shall be secured against unauthorized entry. (Locked equipment cabinet)

(7) Each circuit that affects the proper functioning of a grade crossing warning system shall be

kept free of any ground or combination of grounds that will permit a current flow of 75 percent of more of the

release value of any relay or electromagnetic device in the circuit.

(8) A standby source of power shall be provided with sufficient capacity to operate a warning system for a reasonable length of time during a period of primary power interruption. The designated capacity shall be specified on the plans. (Paragraph 10-6.a.(1)) Batteries shall be checked as follows:

(a) Keep battery terminals, vent caps and cell casings clean. Keep terminals lightly coated with no-oxide grease.

(b) Keep electrolyte at the correct level in each cell.

(c) Check the charging rate and adjust as necessary.

(d) Measure the voltage of each cell and record.

(9) *Flashing Light Units shall be:*

(a) Properly positioned and aligned and shall be visible to a highway user approaching the crossing.

(b) Maintained to prevent dust and moisture from entering the interior of the unit. Roundels and reflectors shall be clean and in good condition.

(c) All lights shall flash alternatively. The number of flashes per minute for each light unit shall be 35 minimum and 65 maximum.

(10) Each gate arm light shall be maintained in such condition to be properly visible to approaching highway users. Gates shall be cleaned and lubricated, as necessary. Lights and light wire shall be secured to the gate arm.

(11) The voltage at each lamp shall be maintained at not less than 85 percent of the prescribed rating for the lamp.

(12) Each gate arm, when in the downward position, shall extend across each lane of approaching highway traffic and shall be maintained in a condition clearly viewed by approaching highway users. Each gate arm shall start its downward motion not less than three seconds after flashing lights begin to operate and shall be in a horizontal position at least five seconds before the train arrives at the crossing.

(13) System must activate at least 20 seconds prior to rail traffic occupying a grade crossing.

(14) Train detection apparatus shall be maintained to detect a train or railcar in any part of a train detection circuit. If the presence of sand, rust, dirt, grease, or other foreign matter is known to prevent effective shunting, flagging of the crossing shall be accomplished.

(15) Each train detection circuit shall detect the application of a shunt of 0.06 ohm resistance when the shunt is connected across the rails of any part of the circuit.

(16) Each set of fouling wires in a train detection circuit shall consist of two discrete conductors, each maintained in such condition to ensure proper operation of detection apparatus when the circuit is shunted.

(17) Each non-insulated rail joint located within the limits of a train detection circuit shall be bonded by means other than joint bars and the bonds shall be maintained in such condition to ensure electrical conductivity.

(18) Each insulated rail joint shall be maintained to prevent current flowing between rails separated by the insulation in an amount sufficient to cause failure of the detection circuit.

(19) A switch, when equipped with a switch circuit controller connected to the point and interconnected with warning system circuitry, shall be maintained so that the warning system can only be cut out when the switch point is within one-half inch of full reverse position.

(20) Each wire shall be tagged or otherwise marked that it can be identified at each terminal. Tags and other marks shall be made of insulating material and so arranged that tags and wires do not interfere with moving parts of the apparatus.

(21) Insulated wire shall be protected from mechanical injury. The insulation shall not be punctured for test purposes. A splice in underground wire shall have insulation resistance at least equal to that of the wire spliced.

(22) Wire on a pole line shall be securely attached to an insulator that is properly fastened to a cross arm or bracket supported by a pole or other support. Wire shall not interfere with other wires on the pole line. An open-wire transmission line operating at voltage of 750 volts or more shall be placed not less than 4 feet above the nearest cross arm carrying active warning system circuits.

(23) Each sign mounted on a signal system post shall be in good condition and be visible to the highway user.

b. ***Inspections and Tests***

Inspection and tests of electric/electromechanical signals shall be performed to determine if the warning system and its component parts are maintained in a condition to perform their intended function. Any electronic device, relay, or other electromagnetic device that fails to meet the requirements of tests required by

this part shall be removed from service and shall not be restored to service until its operating characteristics are in accordance with the limits within which such device or relay is designed to operate. Additional tests, adjustments, cleaning and lubrication in accordance with equipment manufacturer shall be accomplished. Proper precautions must be taken to protect highway traffic and safe operation of trains before any changes or tests are initiated on highway-grade crossing warning system.

(1) Monthly Inspection and/or Tests

(a) Ground Tests - A test of grounds on each energy bus furnishing power to circuits that affect the safety of the warning system operation. (See paragraph 10-6.a.(7))

(b) Standby Power - Standby power shall be tested. (See paragraph 10-6.a.(8))

(c) Flashing Lights Units - Each flashing light unit shall be inspected for proper visibility, dirt and damage to roundels and reflectors. Lenses shall be cleaned and bulbs replaced, as necessary. (See paragraph 10-6.a.(9).(b))

(d) Gate Arms and Gate Mechanism - Each gate arm and mechanism shall be inspected and observed for proper operation. (See paragraph 10-6.a.(10) and (12))

(e) Warning System Operation - Each

crossing warning system, including warning bells or other stationary audible warning devices, shall be tested to determine that it functions as intended. (See paragraph 10-6.a.(15))

(f) Highway traffic signal pre-emption interconnection shall be tested.

(2) Quarterly Inspection and/or Tests

(a) Cut-out Circuits – Each cut-out circuit shall be tested at least every three months to determine that the circuit functions as intended. A cut-out circuit is any circuit or device which overrides the operation of automatic warning system. This includes both switch cut-out switches and devices which enable personnel to manually override the system operation.

(b) Insulated Rail Joints, Bond Wires, and Track Connections shall be inspected. (See paragraph 10-6.a.(17) and (18))

(3) Annual Inspection and/or Tests

(a) Flashing Light Units and Lamp Voltage -

1. Each flashing light unit shall be inspected for proper alignment and frequency of flashes in accordance with installation specifications. (See paragraph 10-6.a.(9).(a) and (c))

2. Lamp voltage shall be tested. (See paragraph 10-6.a.(11))

(b) Gate mechanism hold-clear devices shall be tested for proper operation.

(c) Each crossing warning system shall be tested for the prescribed warning time. (See paragraph 10.6.a.(13))

(d) Timing Relays and Timing Devices - Each timing relay and timing device shall be tested. The timing shall be maintained at not less than 90 percent nor more than 110 percent of the 41 predetermined time intervals. The predetermined time intervals shall be shown on the plans or marked on the timing relay or timing device.

(4) The following shall be tested at the frequency indicated:

(a) Relays affecting the proper functioning of a crossing warning system

1. Alternating current centrifugal relays shall be tested every 12 months.

2. Alternating current vane type relays, direct current polar type relays and relays with soft iron magnetic structure shall be tested every two years.

3. Other type relays shall be tested at least every four years.

(b) Insulation resistance tests, wires in trunking and cables

1. Insulation resistance tests shall be made on wires or cables every ten years.

2. Insulation resistance tests shall be made between all conductors and ground, between conductors in each multiple conductor cable and between conductors in trunking. Insulation resistance tests shall be performed when wires , cables and insulation are dry.

3. When insulation resistance of wire or cable is found to be less than 500,000 ohms, prompt action shall be taken to repair or replace the defective wire or cable. Until replacement is completed, insulation resistance testing shall be made annually. A circuit with a conductor having an insulation resistance of less than 200,000 ohms shall not be used.

c. ***Results of Inspections and Tests***

Results of inspections and tests made in accordance with paragraph 10-6.b shall be recorded. A sample form is provided in Appendix B, Figure B-3. Each record shall be signed by the inspector. Each record shall be retained for two years or until the next reported inspection, which ever is longer. Each record shall indicate activity name, crossing inventory name, place and date, equipment tested, results of tests, repairs, replacements, adjustment made, and condition in which the apparatus was left.

CHAPTER 11
Bridges

11-1. GENERAL.

a. Debris built up around piers or pilings in streams or drainage channels shall be removed.

b. All bridges shall be equipped with inner guardrails as specified in MIL-HDBK-1005/6.

c. Rail anchors shall not be installed on track over open deck bridges. Any anchors found on track over an open deck bridge should be removed immediately.

11-2. BRIDGE INSPECTION.

a. Railroad bridges shall be inspected using the procedures and checkpoints described in NAVFAC MO-322. Minimum frequency for inspection of railroad bridges is 2 years.

b. Structure analysis based on current loading, or larger anticipated loadings shall be maintained on file in accordance with NAVFACINST 11230.1.

11-3. DANGEROUS CONDITIONS.

a. Inspectors shall note any condition in a bridge foundation that might adversely affect train operations. Such conditions shall be reported immediately to the proper authorities. Train operations over the structure shall not be permitted until the bridge is examined in sufficient detail to establish the safety of the structure.

CHAPTER 12
Track Geometry

12-1. General.

During routine track inspections, track geometry measurements shall be taken as a minimum at the following locations:

(1) Wherever there are visual indications of track geometry deviations.

(2) Wherever track geometry deviations were previously detected, unless the deviation has been corrected.

(3) Other locations as specified in this chapter.

12-2. Gage.

a. ***Definition.*** Gage is the distance between the two rails, measured at right angles to the rails in a plane 5/8 inch below the top surface of the rail head, as shown in Figure 12-1. Gage measurements shall include any evidence of lateral movement under load.

b. ***Measurement locations.*** During routine track inspections gage shall be measured at the following locations:

(1) In turnouts, just ahead of switch points. (See Figure 12-2)

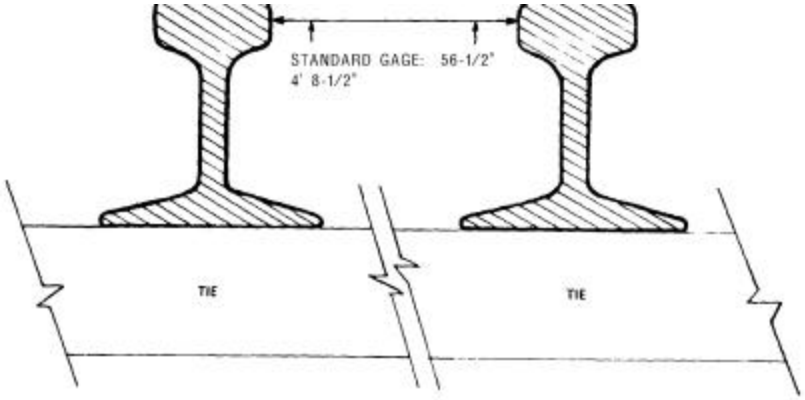

Figure 12-1. Gage Measurement

(2) In turnouts, at the joints in curved closure rails. (See Figure 12-2)

(3) At the point of frog on both sides of turnouts and rail crossings. (See Figure 12-2)

(4) Wherever there is a dark streak running along the field side of the top surface of the rail head.

(5) Wherever wear marks on a tie indicate lateral tie plate movement.

(6) Where significant gap exists between the rail base and outside shoulder of the tie plate.

(7) At locations where ties are badly skewed.

(8) In road crossings.

Figure 12-2. Required gage measurement locations within turnouts

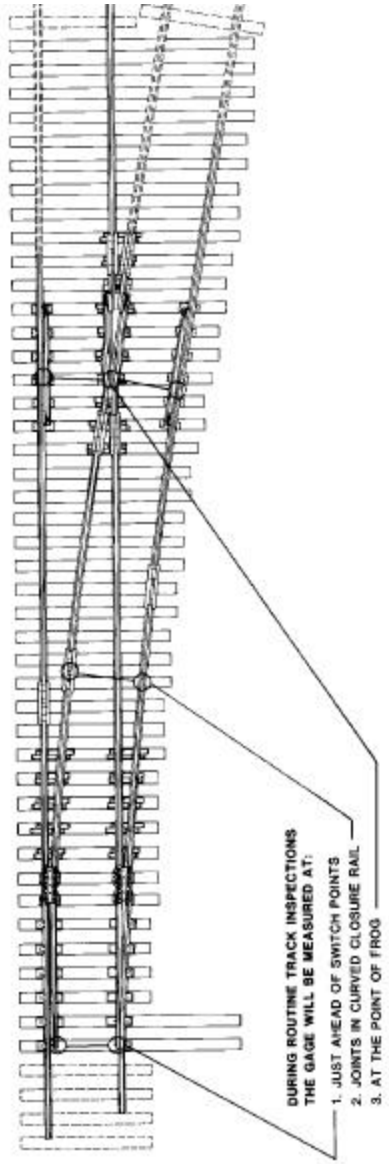

(9) Near the beginning and ending of curves.

(10) In extremely sharp curves (12 degrees or greater) gage shall be measured in at least three well-spaced locations within the curve. Outside rail joints should also be observed for gage widening.

c. ***Standard gage.*** Standard gage is 56-1/2 inches. Track will be gaged to this standard except in curves with high degrees of curvature (see Table 12-1) or other unusual conditions where standard gage is not recommended by the engineer in charge.

Table 12-1. Recommended gage for curved track

Degree of Curvature	*Recommended, Gage, inches*
Up to 12 degrees	56-1/2
Over 12 degrees up to 14 degrees	56-5/8
Over 14 degrees up to 16 degrees	56-3/4
Over 16 degrees up to 18 degrees	56-7/8
Over 18 degrees,	57

d. ***Maintenance Standard.*** Maintenance standards for gage are as follows:

	Allowable Gage	
Track Category	*Minimum*	*Maximum*
A	56-1/8”	57-1/2”
B	56-1/8”	57-1/2”
C	56”	57-3/4”

12-3. Crosslevel.

a. ***Definition.*** Crosslevel is the difference in elevation between the top surfaces of the two rails

measured at right angles to the track, as shown in Figure 12-3. Crosslevel measurements shall include any evidence of vertical movement under load.

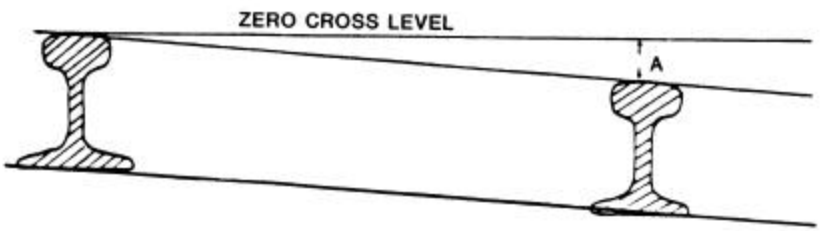

Figure 12-3. Crosslevel measurement

b. ***Designated crosslevel.*** On tangent track, the designated crosslevel is zero. On curved track, the designated crosslevel is equal to the designated superelevation.

c. ***Maintenance Standard.*** Maintenance standards for the allowable deviation from designated for crosslevel are as follows:

Track Category	*Maximum Allowable Deviation*
A	1-1/4”
B	1-1/2”
C	1-3/4”

12-4. Superelevation.

a. ***Definition.*** Superelevation is the intended increase in elevation of the outer rail above the inner rail in a curve.

b. ***Reverse superelevation.*** The outside rail of a curve may not be lower than the inside rail.

c. ***Maximum superelevation.*** The outside rail of a curve may not be more than 3 inches higher than the inside rail.

d. ***Uniform superelevation.*** If a curve is superelevated, the superelevation shall be uniform throughout the curve.

e. ***Superelevation runoff.*** Superelevation runoff shall be at a uniform rate and shall extend at least the full length of the spiral. If no spiral is present, the superelevation runoff shall be accomplished on the tangent track. Superelevation runoff shall not exceed 1 inch in any 31 feet of rail.

f. ***Recommended superelevation.*** The recommended superelevation and maximum operating speeds for curved track can be determined from Table 12-2.

12-5. Warp.

a. ***Definition.*** Warp is the difference in crosslevel between any two points less than or equal to

Table 12-2. Superelevation for Curved Track

Degree of	*Maintenance Standard Maximum Operating Speed mph*							
Curvature	*15*	*20*	*25*	*30*	*35*	*40*	*45*	*50*
0.50	0.50	0.50	0.50	0.50	0.50	0.50	0.50	0.50
1.00	0.50	0.50	0.50	0.50	0.50	0.50	0.50	0.50
1.50	0.50	0.50	0.50	0.50	0.50	0.50	0.50	0.75
2.00	0.50	0.50	0.50	0.50	0.50	0.50	0.75	1.50
2.50	0.50	0.50	0.50	0.50	0.50	0.75	1.50	2.50
3.00	0.50	0.50	0.50	0.50	0.50	1.50	2.25	
3.50	0.50	0.50	0.50	0.50	1.00	2.00	3.00	
4.00	0.50	0.50	0.50	0.50	1.50	2.50		
4.50	0.50	0.50	0.50	0.75	2.00	3.00		
5.00	0.50	0.50	0.50	1.25	2.25			
5.50	0.50	0.50	0.50	1.50	2.75			
6.00	0.50	0.50	0.75	1.75				
6.50	0.50	0.50	0.75	2.00				
7.00	0.50	0.50	1.00	2.50				
7.50	0.50	0.50	1.25	2.75				
8.00	0.50	0.50	1.50	3.00				
8.50	0.50	0.50	1.75					
9.00	0.50	0.50	2.00					
9.50	0.50	0.75	2.25		SUPERELEVATION SHALL NOT			
10.00	0.50	0.75	2.50		EXCEED 3.00 INCHES			
10.50	0.50	1.00	2.50					
11.00	0.50	1.00	2.75					
11.50	0.50	1.25	3.00					
12.00	0.50	1.50						
13.00	0.50	1.75						
14.00	0.50	2.00		TRAINS SHALL NOT BE OPERATED ON				
15.00	0.50	2.25		CURVES AT SPEEDS WHICH REQUIRE				
16.00	0.50	2.50		MORE THAN 3 IN. SUPERELEVATION				
17.00	0.75	2.75						
18.00	0.75	3.00						
19.00	1.00							
20.00	1.25							

Notes:

1. At least 0.50 inches of superelevation is recommended on all curves as indicated to prevent reverse superelevation.
2. Safety standards should use the 3-inch unbalanced formula in accordance with the FRA "Track Safety Standards".

Superelevation calculated using 2-inch unbalanced formula, i.e.

$$E = (0.0007DV^2)-2$$

where: E = Superelevation, inches, D = Degree of Curvature V = Speed, mph. All values have been rounded to 1/4" increments.

Examples:

To determine superelevation: Enter table at maximum operating speed. Go down to maximum degree of curvature. Read superelevation.

Example: Known: Maximum operating speed: 25 mph. Degree of curvature: 8°
Required superelevation is 1.50 inches.

To determine maximum allowable operating speed: Enter table with degree of curvature. Go across to existing superelevation. Read maximum allowable operating speed from column heading. Where existing superelevation falls between two table entries the lower operating speed must be used.
speed must be used.

Example: Known: Degree of Curvature: 6° Existing superelevation: 1.5”
Maximum allowable operating speed: 25 mph

62 feet apart. Warp is determined as follows:

(1) Use the line rail as the reference rail.

(2) Measure the crosslevel at any two points less than 62 feet apart, normally at joints in the rail. If the reference rail is lower than the opposite rail, the sign of the measurement is negative (-). If the reference rail is higher than the opposite rail, the sign of the measurement is positive (+).

(3) To determine warp. If both signs are the same, drop the signs and subtract the smaller measurement from the larger measurement. If the signs are different, drop the signs and add the measurements. Figure 12-4 presents an example of the warp calculation.

b. ***Designated warp.*** The designated warp on both tangent and curved track is zero.

c. ***Maintenance Standard.*** Maintenance standards for warp are as follows:

Track Category	*Maximum Allowable Deviation*
A	1-3/4"
B	1-3/4"
C	2"

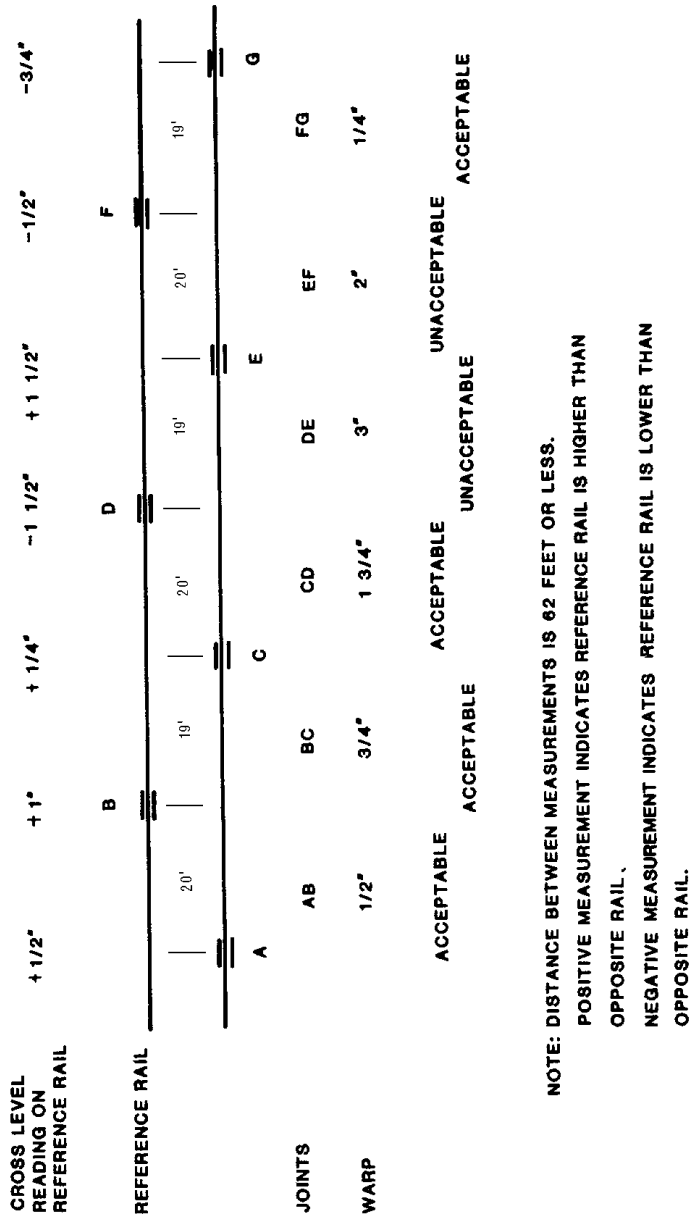

Figure 12-4. Determination of Warp

12-6 Alignment.

a. ***Definition.*** Alignment is the relative position of the rails in a horizontal plane.

(1) One rail shall be designated as the line rail. The alignment of the track is established by this rail. Either rail may be used as the line rail on tangent track so long as the same rail is used for the entire length of the tangent. The outside rail in a curve is always the line rail.

(2) In curves, the inside rail is designated as the grade rail. The grade rail is the reference from which superelevation is applied to the outside rail of the curve.

b. ***Measurement.*** Alignment is measured at the midpoint of a 62-foot stringline stretched along the gage side of the line rail at a distance of 5/8 inch below the top of the rail head. The alignment measurement is the distance in inches from the midpoint of the stringline to the gage side of the line rail. It is measured at right angles to the stringline.

c. ***Designated alignment.*** For tangent track the designated alignment is zero. For curved track the designated alignment is the degree of curvature. In spirals the change in curvature will be at a uniform rate.

d. ***Curvature measurement.*** On curves, 1 inch distance from the 62-foot stringline to the line rail

equals approximately 1 degree of curvature, as shown in Figure 12-5. If the degree of curvature is not known, it can be determined as follows:

(1) Beginning at a point near the center of the curve, mark at least two stations spaced 31 feet apart in both directions along the line rail.

(2) Measure the alignment at each station, including the beginning point, and average the measurements. This average measurement is the approximate degree of curvature.

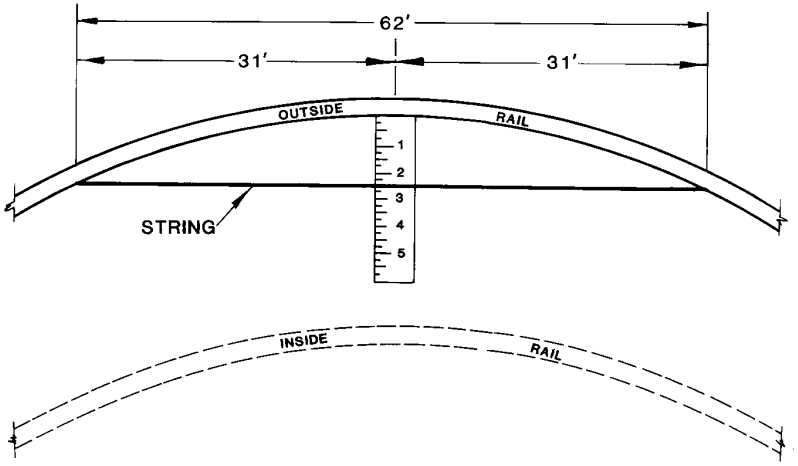

MEASUREMENTS OF ALIGNMENT USING A 62 FOOT STRINGLINE:

1. STRETCH STRING WITH ENDS AGAINST GAGE SIDE OF LINE RAIL 5/8" BELOW THE SURFACE OF THE RAIL.
2. MEASURE AT THE MID- POINT (31′) FROM STRING TO GAGE SIDE OF RAIL 5/8" DOWN
3. ONE INCH EQUALS APPROXIMATELY ONE DEGREE OF CURVATURE.

EXAMPLE ILLUSTRATES A MEASUREMENT OF ABOUT 2-1/2", OR APPROXIMATELY 2 DEGREES 30 MINUTES OF CURVATURE FOR THE ONE ISOLATED SPOT WHERE THE MEASUREMENT WAS TAKEN.

Figure 12-5. Measurement of curve alignment

e. ***Maintenance Standards.*** Maintenance Standards for the allowable deviations from designated alignment are as follows:

Track Category	*Maximum Allowable Deviation*
A	1-3/4"
B	2"
C	3"

12-7. Profile.

a. ***Definition.*** Profile is the relative elevation of the two rails along the track. Profile deviation is the deviation from uniform profile on either rail at the midpoint of a 62-foot chord.

b. ***Maintenance Standards***. Maintenance Standards for the allowable deviations from uniform profile are as follows:

Track Category	*Maximum Allowable Deviation*
A	2"
B	2-1/4"
C	2-3/4"

CHAPTER 13
Clearances

13-1. Measurement. Vertical clearance shall be measured vertically from the top surface of the rail. Side clearance shall be measured horizontally from the centerline of the track.

13-2. Clearance Requirements, Tangent Track. Clearances for tangent track shall not be less than those listed in Table 13-1 and shown in Figure 13-1.

13-3. Clearance Requirements, Curved Track.

a. For each degree of curvature, side clearances shall be increased 1-1/2 inches over that required in Table 13-1 and Figure 13-1.

b. When an obstruction is located adjacent to tangent track but the track is curved within 80 feet of the obstruction, the side clearances shall be increased by the following amounts:

Distance from Obstruction to Curved Track, feet	**Increase per Degree of Curvature, inches**
0 – 20	1 - 1/2
21 – 40	1 - 1/8
41 – 60	3/4
61 – 80	3/8

Table 13-1

Clearance Requirements for Tangent Tracks

Obstruction	Required Clearance
Vertical Clearances	
Overhead wires: open supply, arc wires, service drops	
0 to 750 volts	27 feet
750 to 15,000	28 feet
Exceeding 15,000 volts	30 feet
Other overhead wires	27 feet
Building entrances (including engine-houses)	18 feet
Overhead	22 feet
Other overhead obstructions	22 feet
Side Clearances	
Buildings	8 feet-6 inches
Buildings without platforms (delivery required	8 feet
Platforms	
Freight platforms up to 4 feet maximum height	6 feet-2 inches
Refrigerator car platforms up to 3 feet-3 inch	6 feet-2 inches
Refrigerator car platforms 3 feet-3 inch to 4 feet high	8 feet
Low platforms (less than 8 inches high)	5 feet
Engine-house entrances	6 feet-6 inches
Building entrances (other than engine-houses)t	8 feet
Canopies over platforms (canopy height 16 feet or less)	8 feet
Fences, retaining walls, utility poles, and other obstructions	8 feet-6 inches
Bridges	8 feet
Signs	8 feet
All loose, palliated, and stacked materials	8 feet
Parked vehicles	8 feet

Note: In curves, side clearances shall be increased 1-1/2 inches for *each* degree of curvature.

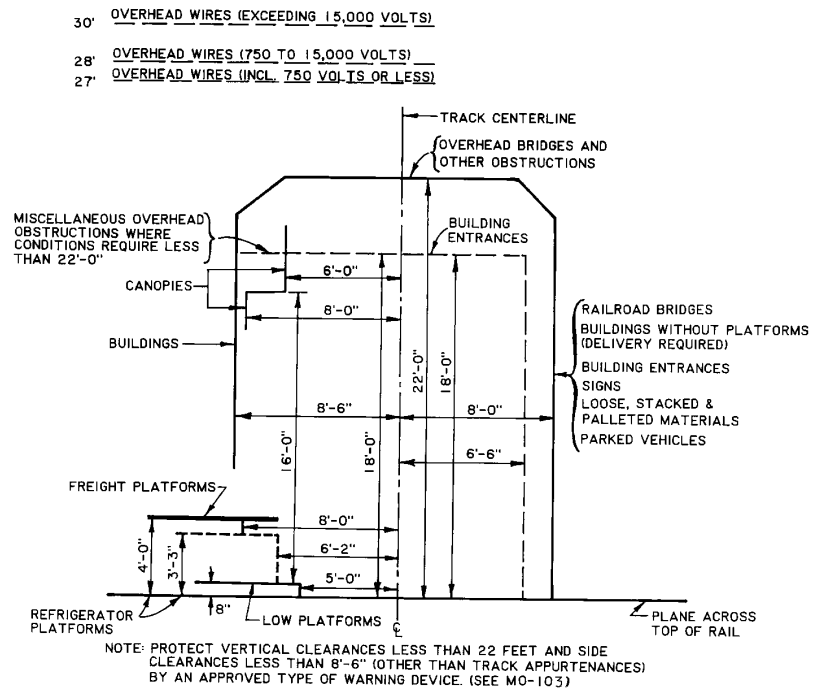

Figure 13-1. Minimum clearances for tangent track

13-4. Track Centers. The minimum spacing between the centerlines of adjacent tracks shall be maintained as follows:

Type of Tracks	Minimum Center-to-Center Distance
Yard, loading, and storage tracks	14 feet
Yard track parallel to main or running track	15 feet
Passing track	15 feet

13-5. Changes to Clearances. Whenever changes in alignment or elevation are made, clearances shall be checked for compliance with the criteria given in this chapter. This is especially important in the vicinity of buildings, bridges, overhead structures, platforms, and tunnels.

CHAPTER 14
Miscellaneous Track Appliances

14-1. Track Scales. The inspection, maintenance, and calibration of railroad track scales are covered in the Association of American Railroads "Scale Handbook" which is published annually as a part of the AREMA "Manual For Railway Engineering". Track scales should be inspected and calibrated periodically in accordance with the recommendations given in the "Scale Handbook."

14-2. Bonded and Grounded Track.

a. Certain tracks used for the loading/unloading of fuels and ordnance are required to be bonded and grounded. During maintenance of bonded and grounded track, care shall be taken to maintain the integrity of the rail bonds, ground rods, and connections.

b. During routine track inspections, the general condition of the bonds, ground wires, and connections shall be observed. Loose or missing bonds or connections shall be repaired immediately. The occurrence of excessive corrosion in the terminal areas of the bond wires and ground wires indicates a need for cleaning, repair, or replacement. Bonds and grounds shall be replaced if there exist a large difference in electrical potential between the rails.

14-3. Derails.

a. Derails shall be maintained in good operating condition.

b. Derails shall be maintained free of lost motion which would allow it to be operated without removing the lock.

c. Derails shall be kept clean and painted in order to be readily visible to operating personnel.

d. Derails shall be properly installed for the rail to which it is applied

CHAPTER 15
Maintenance Activities for Category "D" Track

15-1. General. The minimum level of maintenance for inactive (Category D) track will be consistent with the anticipated future mission of the activity and the particular track involved. This section summarizes the general requirements.

15-2. Maintenance Requirements.

a. Maintenance of rail, ties, and ballast shall be discontinued.

b. Drainage shall be maintained in accordance with section 3-2 of these standards.

c. Damaging vegetation in the ballast, roadbed, and ditches shall be controlled in accordance with section 3-3 of these standards.

d. Bridges and other track structures shall be maintained in structurally sound condition with respect to their expected loading.

e. Clearances addressed in Chapter 13 shall be maintained to insure that permanent facilities are not constructed within the railroad right-of-way.

15-3. Inactivation and Disposal. In accordance with NAVFAC P-73 "Real Estate Procedures Manual," action will be taken to dispose of track having no foreseeable need.

APPENDIX A
References

GOVERNMENT PUBLICATIONS

Department of the Navy

OPNAV Instruction 6250.4 (Current Edition)	Pest Management Program
NAVFAC Instruction 11230.1 (Current Edition)	Inspection, Certification and Audit of Crane and Railroad Trackage
NAVFAC MO-103	Maintenance of Trackage
NAVFAC MO-312	Wood Protection
NAVFAC MO-312.2	Receipt and Inspection of Treated Wood Products by Installation Personnel
NAVFAC MO-314	Weed Control and Plant Regulation
NAVFAC MO-322 Vol I and II	Inspection of Shore Facilities
NAVFAC P-73	Real Estate Procedures Manual
NAVFAC Guide Specification NFGS-05650	Railroad Trackwork & Accessories

Department of Defense

Military Handbooks

MIL-HDBK-1005/3	Drainage Systems
MIL-HDBK-1005/6	Trackage

Department of Transportation

Federal Highway - Administration	Manual on Uniform Traffic Control Devices – Part 8 "Traffic Control for Highway-Rail Grade Crossings
	Railroad-Highway Grade Crossing Handbook
Federal Railroad - Administration	Track Safety Standards Code of Federal Regulations, Title 49, Chapter II, Part 213
	Grade Crossing Signal System Safety, Code of Federal Regulations, Title 49, Chapter II, Part 234

NONGOVERNMENT PUBLICATIONS

American Railway Engineering & Maintenance-of-Way Association, 8201 Corporate Drive, Suite 1125 Landover MD 20785	Manual for Railway Engineering
	Portfolio of Trackwork Plans
American Wood Preservers' Association, P.O. Box 5690 Granbury TX 76049	
C6	Crossties and Switch Ties - Preservative Treatment by Pressure Process
P2	Standard for Creosote and Creosote Solutions
P3	Standard for Creosote Petroleum Oil Solution

APPENDIX B

Track Inspection Record and Turnout Inspection Checklist

B-1. To aid in the inspection of track, the Track Inspection Record, Turnout Inspection Checklist and Highway Grade Crossing Warning System Inspection/Test Report provided in NAVFACINST 11230.1 are recommended. Appendix E provides a summary of the maintenance standards and safety standards for Navy railroad track.

B-2. Track Inspection Record.

a. ***Intent and application.*** The Track Inspection Record is intended for use as a record of scheduled maintenance, control, safety, and special track inspections. This form will be used for each operational and special track inspection to record the type and location of deviations from the standards, degree of hazard, proposed corrective action and time frame for completion, and the actions taken to correct the deviation. For scheduled maintenance inspections, the inspector shall record the location and description of deficiencies. Completed records shall be provided to the appropriate office for action.

b. The form includes identifying information including installation name, reporting organization, inspectors name both printed and signed, and the

inspection date. The remainder of the form is available for listing deviations observed during the track inspection. In this section one line is normally used to record each deviation, although two or more lines may be required if additional comments are needed. Figure B-1 presents an example of a track inspection record. A description of each of the columns on this form is given below:

Degree of Hazard: The hazard of each defect shall be provided in accordance with NAVFACINST 11230.1. General guidelines to determine the degree of hazard of a defect are described in NAVFACINST 11230.1. Abbreviations for degree of hazard are provided on the bottom of the Track Inspection Record.

Catastrophic	-	CAT
Critical	-	CRIT
Marginal	-	M

Location milepost or station number: Location of the deviation as referenced to the installations system of track stationing. May be recorded as stations or as Milepost + Feet.

Examples: Stations: 0+00, 6+39, 102+06
Mileposts: 0+0000, 0+639, 1+4926

Deficiency description: Brief description of the deficiency of deviation observed in the track.

Examples: Wide gage 57-7/8 inches
Small amount of vegetation growing on track

Proposed corrective action and time frame: What needs to be done to correct the deviation and when. This should include the application of operating restrictions where required.

Examples: Limit speed to 10 mph, regage, and respike as soon as possible
Spray for vegetation control, within 1 month

Follow-up actions: Action taken and date completed: what was done to correct the problem and the date repairs were completed.

Examples: 10 mph restriction applied 10/2/90, Repaired 10/15/90
Herbicide application 6/2/91

B-3. Turnout Inspection Checklist

a. ***Intent and application.*** The Turnout Inspection Checklist is intended for use in the inspection of turnouts.

b. ***Use.*** The Turnout Inspection Checklist includes identifying information such as activity name, inspectors name, track identification (track name or number for identifying track), turnout identification (turnout number), and inspection date.

c. Additional sections are provided for the major components of the turnout such as ties, switch and stand,

frog, and guard rails and for the additional data required such as measurements and general items. d. To assist in the use of this form and to promote consistent reporting, standard responses are supplied for many of the items. The applicable response should be circled for each item. If the printed response does not cover the situation or if additional comment is required, a number can be placed in the blank after "Note ___" and the comments written in the "Notes" space provided at the bottom of the form. Blank spaces have been provided where items require a numerical response or a measurement. For multiple items (such as rail braces) blanks have been provided before the responses so that a number may be indicated. For example, if two rail braces were loose, one is broken, and one is missing, the response would be:

OK 2 Loose 1 Damaged 1 Missing Note____

e. Some turnouts may be equipped with self-guarded frogs that do not require the presence of guard rails. In cases where there is a self-guarded frog and no guard rails the entire section of the form titled "Guard Rails" should be crossed out and the words "Self-Guarded" written in the upper right corner of the section. This will indicate that there are no guard rails in the turnout. If the frog is self-guarded and there are guard rails, the guard rails shall be inspected and the appropriate sections of the form completed.

f. The requirements for turnouts are found in Chapter 8 of these standards. Figure B-2 presents an example of a completed turnout inspection form.

B-4. Highway Grade Crossing Warning System Inspection/Test Report (See Figure B-3)

a. ***Intent and application.*** The Highway Grade Crossing Warning System Inspection/Test Report is intended for use in the inspection of electric/ electomechanical grade crossing signals as discussed in paragraph 10-6.

b. ***Use.*** The Highway Grade Crossing Warning System Inspection/Test Report includes identifying information such as activity name, inspectors name, crossing location (track name and highway designation) and DOT/AAR Crossing Inventory Number, if applicable, and inspection date.

c. A checklist is provided, which is divided into Parts A, B, and C. Part A is the monthly requirements, Part B is the quarterly requirements and Part C is the annual requirements. When performing a monthly inspection, Part A is completed. When performing a quarterly inspection, Parts A and B are completed. When performing an annual inspection, Parts A, B and C are completed. Additional space is provided to indicate repairs, replacements, adjustments made and condition in which the apparatus was left. Areas are available for recording standby power battery voltages.

TRACK INSPECTION RECORD			TYPE OF INSPECTION: [ ] SCHEDULED MAINTENANCE [✓] CONTROL INSPECTION [ ] SAFETY INSPECTION [ ] OPERATIONAL INSPECTION		
ACTIVITY Anywhere Naval Weapons Station			TRACK NAME OR ID North Main		REPORT DATE 9/9/97
INSPECTOR PRINT OR TYPE & SIGN John R. Doe John R. Doe			INSPECTION ORGANIZATION FMED		
DEGREE OF HAZARD	LOCATION MILEPOST OR STATION	DEFICIENCY DESCRIPTION	PROPOSED CORRECTIVE ACTION AND TIMEFRAME	FOLLOW-UP ACTIONS: ACTION TAKEN	FOLLOW-UP ACTIONS: DATE COMPLETED
CAT	1+75	4 Consecutive Defective Ties	Close to Traffic	Track Closed	9/9/97
			Replace ties; ASAP	Ties Replaced	9/12/97
M	2+35	Vegetation (Brush) growing	Cut Brush Along Row		
		near track	within 2 months		
CRIT	4+00	Broken Joint Bar (Between	Class 1 Restriction (10mph)	Restriction Applied	9/9/97
		Center Bolt Holes	Replace Bar; within 1 week	Repaired	9/14/97
CRIT	5+80	Wide Gage - 57 7/8"	Class 1 Restriction (10mph)	Restriction Applied	9/9/97
			Regage + Respike (ASAP)	Repaired	9/12/97
		EXAMPLE			

LEGEND: Degree of Hazard CAT - Catastrophic CRIT - Critical M- Marginal

Page 1 of 1

Figure B-1 Example track inspection record

TURNOUT INSPECTION CHECKLIST

ACTIVITY: Anywhere Naval Weapons Station	REPORTING ORGANIZATION: FMED	INSPECTOR (PRINT OR TYPE/SIGNATURE): John R. Doe / John R. Doe	
TRACK IDENTIFICATION: North Main	TURNOUT IDENTIFICATION: #11	TURNOUT SIZE: #8	SWITCH POINT LENGTH: 16'-6" / DATE: 9/9/97

GENERAL

Are All Materials Proper Size?	YES	(NO)	NOTE 1
Is Rail Same Weight and Section?	(YES)	NO	NOTE ___
Are Flangeways Clear of Debris?	(YES)	NO	NOTE ___
Are Crib Areas Clear of Debris?	(YES)	NO	NOTE ___
Surface	(GOOD)	FAIR	POOR	NOTE ___
Alignment	(GOOD)	FAIR	POOR	NOTE ___

FROG

Point	(OK)	WORN ___"	CHIPPED	BROKEN	(NOTE) 6
Top Surface	OK	(WORN) 1/4"	BROKEN	DAMAGED	(NOTE) 6
Bolts:	OK	2 (LOOSE)	1 (MISSING)	___ DAMAGED	NOTE ___
Guarding Face (Self guarded Frog Only):	OK	WORN	BROKEN	DAMAGED	NOTE ___

TIES

Total Number Defective:	3	NOTE ___
Maximum Number of Consecutive Defective:	1	NOTE ___
Number of Occurrences of Defective Joint Ties	0	NOTE ___

GUARD RAILS

Position - Straight	OK	(IMPROPER)	(NOTE) 7		
Turnout	(OK)	IMPROPER	NOTE ___		
Condition - Straight	OK	WORN	(INSECURE)	BROKEN	(DAMAGED)	(NOTE) 7
Turnout	OK	WORN	(INSECURE)	BROKEN	DAMAGED	NOTE ___
Clamps/Fillers - Straight	OK	(LOOSE)	BROKEN	DAMAGED	NOTE ___
Turnout	OK	(LOOSE)	BROKEN	DAMAGED	NOTE ___
Bolts - Straight	OK	1 (LOOSE)	2 (MISSING)	___ DAMAGED	NOTE ___
Turnout	OK	3 (LOOSE)	___ MISSING	___ DAMAGED	NOTE ___

SWITCH AND STAND

Switch Operates Without Difficulty?	(YES)	NO (Describe Problem)				NOTE ___
Switch Stand:	OK	INSECURE	(DAMAGED)			(NOTE) 2
Point Lock/Lever Latches:	OK	MISSING	DAMAGED		LOOSE	(NOTE) 3
Point Gap - Left	(NONE)	LESS THAN 1/8"	1/8" OR GREATER		1/4" OR GREATER	NOTE ___
- Right:	NONE	LESS THAN 1/8"	(1/8" OR GREATER)		1/4" OR GREATER	NOTE ___
Point Condition - Left	(OK)	WORN	CHIPPED		BROKEN	NOTE ___
- Right:	OK	(WORN) ≈ 1/4"	CHIPPED		BROKEN	NOTE ___
Is Point LOWER Than Stock Rail?		Left: (YES)	NO		Right: (YES) NO	NOTE ___
Is Point Rail Beyond Taper HIGHER Than Stock Rail?		Left: (YES)	NO		Right: (YES) NO	NOTE ___
Connecting Rod	(OK)	BENT	DAMAGED	LOOSE	BINDING	NOTE ___
Jam Nut:	(OK)	NONE	DAMAGED	LOOSE	MISSING	NOTE ___
Switch Rods:	(OK)	___ BENT	___ DAMAGED	___ LOOSE	___ BINDING	NOTE ___
Switch Clips:	(OK)	___ BENT	___ DAMAGED	___ LOOSE	___ BINDING	NOTE ___
Connecting Rod Bolt:	(OK)	___ LOOSE	___ DAMAGED		___ MISSING	NOTE ___
Nut On Top?	(YES)	NO	Cotter Key In Place?		YES (NO)	
Switch Rod Bolts:	OK	1 (LOOSE)	___ DAMAGED		___ MISSING	NOTE ___
Nut On Top?	(YES)	NO	Cotter Key In Place?		YES (NO)	
Slide Plates:	OK	___ LOOSE	4 DIRTY	___ DAMAGED	___ MISSING	(NOTE) 4
Rail Braces - Straight Side:	OK	4 (LOOSE)	2 (DAMAGED)		___ MISSING	NOTE ___
Turnout Side	OK	2 (LOOSE)	___ DAMAGED		1 (MISSING)	(NOTE) 5
Heel Filler:	(OK)	___ INSECURE	___ CRACKED/BROKEN		___ MISSING	NOTE ___
Heel Bolts:	OK	1 (LOOSE)	___ DAMAGED		___ MISSING	NOTE ___
Heel Joint Bars/Shoulder Bars: :	(OK)	___ LOOSE	___ DAMAGED		___ MISSING	NOTE ___

MEASUREMENTS (Inches)

	Straight Side	Turnout Side
SWITCH		
Gage Just Ahead of Points:	56 3/4	
Gage @ Switch Heel	56 1/2	57
CURVED CLOSURE RAILS:		
Gage at Joints:	56 5/8	57 1/4
		57 3/8
FROG:		
Gage at Point:	56 1/2	57 1/4
Flangeway Width:	1 3/4	1 3/4
Flangeway Depth:	1 3/4	1 5/8
GUARD RAILS		
Guard Check Gage:	54 5/8	54 3/4
Guard Face Gage:	52 7/8	53
Flangeway Width:	1 3/4	2 1/4

NOTES:
1) Homemade bars, field side of heel
2) Stand cracked
3) Needs oiling
4) Needs cleaning & lubrication
5) Rail braces - improperly positioned
6) Point worn slightly, surface worn ≈ 1/4"
7) Straight side guardrail has been hit & damaged New guard rail needed. Reposition existing guard rail, and secure until replacement is available.

Figure B-2 Example turnout inspection record

Highway Grade Crossing Warning System
INSPECTION/TEST REPORT

Activity _____

Location _____ **Crossing No.** (if any) _____

Monthly (Part A) Check (Ö) Box for Compliance	**Quarterly (Part B)** Check (Ö) Box for Compliance (Perform A + B)	**Annual (Part C)** Check (Ö) Box for Compliance (Perform A + B + C)
☐ Observe Relays ☐ Check Voltages / Fuses ☐ Standby Power Test ☐ System Operation ☐ Clean Crossing Roundels ☐ Observe Flasher Operation ☐ Check for Locks ☐ Inspect / Service Batteries ☐ Check AC & DC Grounds ☐ Inspect Pedestrian Bells ☐ Inspect Signs and Crossbucks	☐ Check Flasher Alignment and Focus ☐ Inspect All Track Wires ☐ Inspect Rail Bonds ☐ Check Insulated Joints ☐ Inspect Approach Batteries ☐ Check Push Button Cutouts ☐ Check Main AC Supply ☐ Circuit Plans in Relay Case ☐ Inspect Poles and Foundations	☐ Inspect Flasher Relay ☐ Check Lamp Voltages ☐ Check Timing Circuits ☐ Check Warning Time ☐ Verify Equipment ☐ Verify Frequencies ☐ Check Circuit Plans

Battery Bank Name	**Cell Type**	**Voltage ---- With Charge**	
		ON	OFF
Main _____	_____	_____	_____
Electronic _____	_____	_____	_____
Island Circuit _____	_____	_____	_____
Approach 1 _____	_____	_____	_____
Approach 2 _____	_____	_____	_____
Approach 3 _____	_____	_____	_____
Approach 4 _____	_____	_____	_____

Repair, Replacements, Adjustments (if none, so state)

_____
_____
_____
_____

Notes: _____
_____
_____

Signature: _____ **Date:** _____
(Signal Maintainer)

Figure B-3 Highway Grade Crossing Warning System Inspection/Test Report

APPENDIX C
Field Identification of Rail Defects

C-1. Rail defects may be observed in track.

Table 7-1 presents a listing of rail defects and appropriate maintenance and safety standards. This appendix presents definitions relating to rail and brief descriptions of the common rail defects observed in track. All figures presented in Appendix C are copyrighted by Sperry Rail Services and used by permission. Figure C-1 presents common rail nomenclature, and Figure C-2 shows the relative positions of planes through the rail.

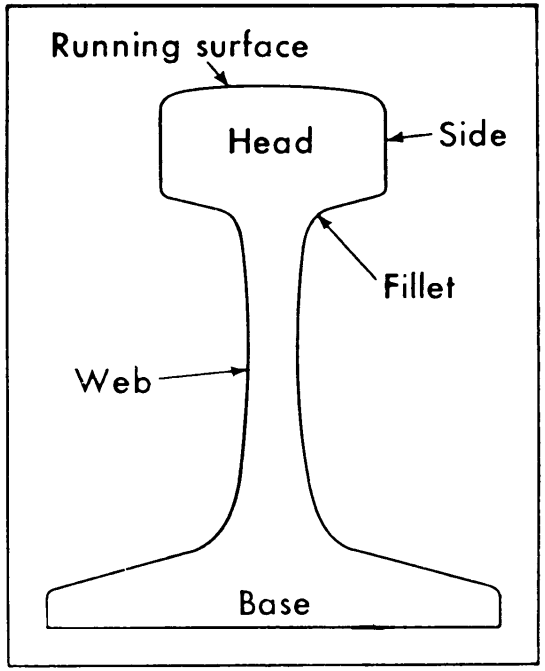

Figure C-1. Rail nomenclature

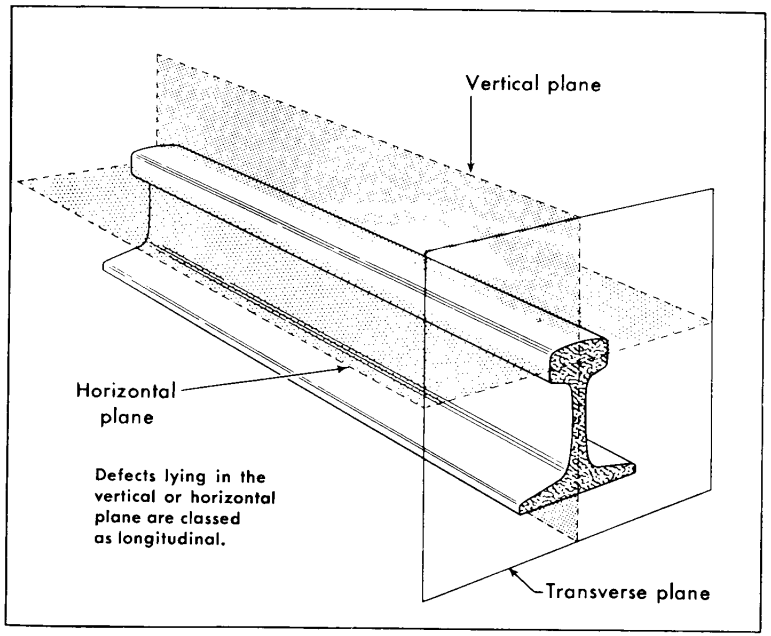

Figure C-2. Relative positions of planes through a rail

C-2. Definition of terms. The following are common terms related to rail and rail defects. NAVFAC MO-103 presents additional terms and information.

a. **Bleeding**. Reddish-brown streak on a rail indicating internal rusting.

b. **Field side.** The side of the rail away from the wheel flange.

c. **Gage side.** The side of the rail closest to the wheel flange.

d. **Head checks.** Transverse surface cracks on the gage corner of rails resulting from cold working of the surface metal. Sometimes referred to as gage checks.

e. **Percent size.** The percentage of rail head cross-sectional area weakened by a rail defect. Used only with transverse defects.

f. **Relaid rail.** Rail that is worn but still usable taken from track and reused in another location. Sometimes referred to as relayer rail.

g. **Shatter crack.** Minute crack in steel caused by rapid or uneven cooling of rail during manufacture.

h. **Transposed rail.** Rail that is moved from one side of the track to the other side without turning the rail so that the gage and field sides are interchanged.

I. **Tread.** The path of wheel contact with the running surface of the rail.

j. **Turned rail.** Rail with some wear that has been removed, turned, and replaced in track so that the gage and field sides are interchanged.

C-3. Field identification of rail defects. These descriptions are presented in alphabetical order to assist in identifying defective rails in track. Refer to NAVFAC MO-103 for additional information.

a. **Bolt hole crack.**

(1) *Description.* A progressive fracture originating at a bolt hole.

(2) *Appearance in track*. Bolt hole cracks are not visible until a bolt or a joint bar has been removed unless the defect has

progressed beyond the bar. They may be recognized by a hairline crack extending from the bolt hole (Figure C-3).

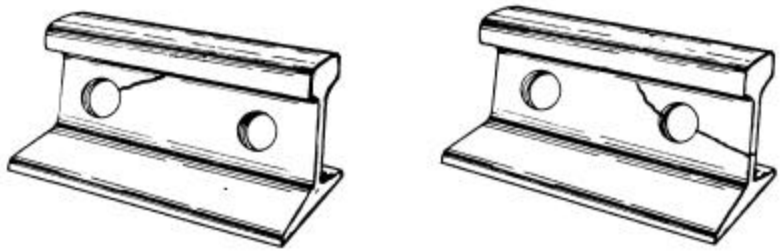

Figure C-3. General appearance of bolt hole cracks

b. **Broken base.**

(1) *Description.* Any break in the base of the rail.

(2) *Appearance in track*. Generally appears as a half-moon crack break in the rail base. Figure C-4 illustrates three different appearances of broken bases.

Figure C-4. General appearance of broken base

c. **Complete break (broken rail).**

(1) *Description.* A complete transverse separation of the head, web, and base of the rail in which there is no sign of a fissure and in which none of the other defects described herein are found.

(2) *Appearance in track*. May appear as a hairline crack running completely around the rail, usually accompanied by bleeding or a separation of the rail at the break with one or both of the broken ends battered down (Figure C-5).

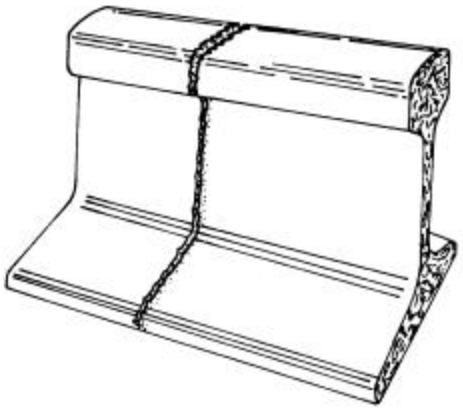

Figure C-5. General appearance of broken rail

d. **Compound fissure.** See “transverse defects.”

e. **Corrosion.**

(1) *Description.* The decaying or corroding of the metal in the web or base of the rail.

(2) *Appearance in track*. Pits or cavities in the upper base or the web of the rail. In advanced stages, a significant loss of material is evident.

f. **Corrugation.**

(1) *Description*. A repeated wavelike pattern on the running surface of the rail. Corrugations develop over a long period of time. A number of factors contribute to the development of corrugations with the actual cause dependent on the track and operating conditions.

(2) *Appearance in track*. Small, hard, bright, short-pitch ridges along the running surface of the rail varying anywhere from 2 to 18 inches apart and usually less than 1/16 inch deep. Although the individual waves (ridges) are usually only a short distance apart, the corrugations may extend over a considerable distance (Figure C-6).

Figure C-6. General appearance of corrugation

g. **Crushed (flattened) head.**

(1) *Description*. The flattening of several inches of the rail head is generally caused by a soft spot in the steel. A

crushed head is usually accompanied by a crushing down of the metal but with no signs of cracking in the fillet under the head. The origin of a crushed head is usually a soft spot in the steel of the head, which gives way under heavy wheel loads.

(2) *Appearance in track*. Generally appears as:

(a) Flattening and widening of the head for several inches with the entire head sagging.

(b) Small cracks in a depression on the running surface.

(c) In advanced stages, a bleeding crack may be present at the fillet under the head (Figure C-7).

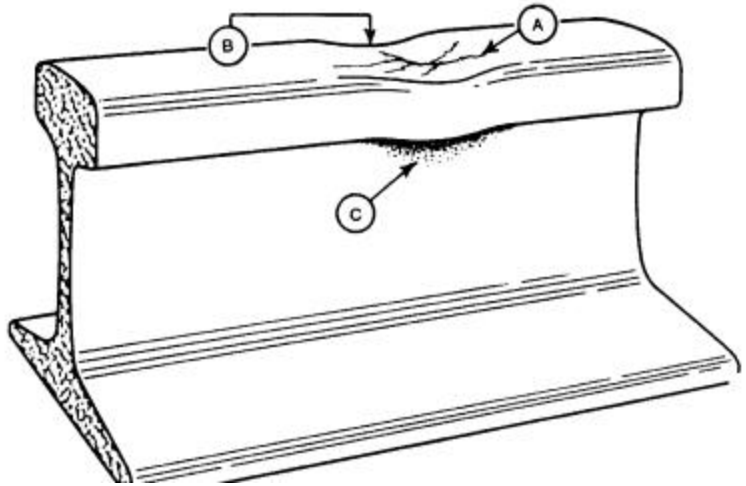

Figure C-7. General appearance of crushed head

h. **Defective weld**.

(1) *Description.* A progressive transverse separation within an area where two rails have been joined by welding or a rupture at a weld due to incomplete penetration of weld metal

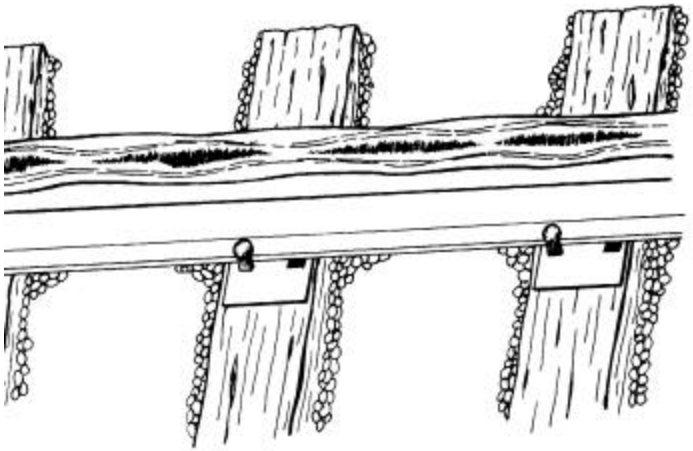

between the rail ends, lack of fusion, entrainment of slag and sand, or shrinkage cracking or fatigue cracking.

(2) *Appearance in track.* No outward sign is visible until the separation reaches the rail surface. A defective weld may then be recognized by a vertical bleeding crack at the welded portion of the rail joint where the separation has reached the surface.

I. **Detail fracture.** See “transverse defects.”

j. **End batter.**

(1) *Description.* Damage caused by wheels striking the rail ends.

(2) *Appearance in track.* Appears as damage to or a depression in the top surface of the rail head at the ends of the rail (Figure C-8).

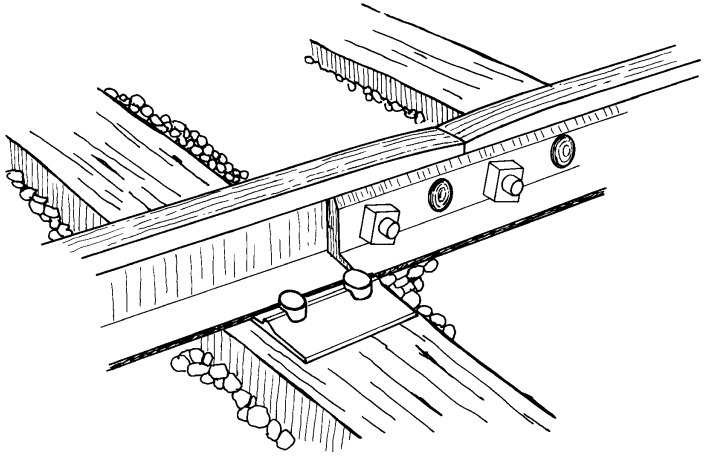

k. **Engine burns (burned rail).**

(1) *Description.* Rail that has been scarred on the running surface by the friction of slipping locomotive wheels. An engine burn may lead to an engine burn fracture.

(2) *Appearance in track.* Round or oval rough spots or holes on the tread of the running surface. Engine burns may be deep (Figure C-9).

Figure C-8. Rail end batter

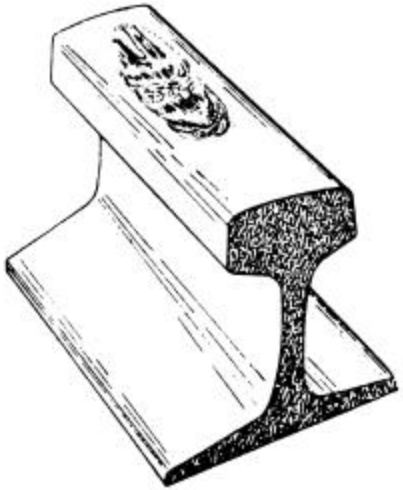

Figure C-9. Typical appearance of an engine burn

l. **Engine burn fracture.**

(1) *Description.* A progressive fracture in the rail head

starting from a point where engine wheels have slipped and burned the rail.

(2) *Appearance in track.* No sign of transverse separation is visible until the defect reaches the rail surface (cracks out). An engine burn fracture may then be recognized by one or more of the following characteristics.

(a) A hairline crack on the side of the head in the immediate vicinity of an engine burn and at right angles to the running surface. The crack may be visible on either the field or gage side of the head.

(b) Transverse thermal cracks extending from the burn to the gage corner and down the side of the head for at least 1/8 inch.

(c) A cracked out horizontal separation on the field side of the rail head under the burned area often accompanied by one or more thermal cracks extending transversely to the gage corner (Figure C-10).

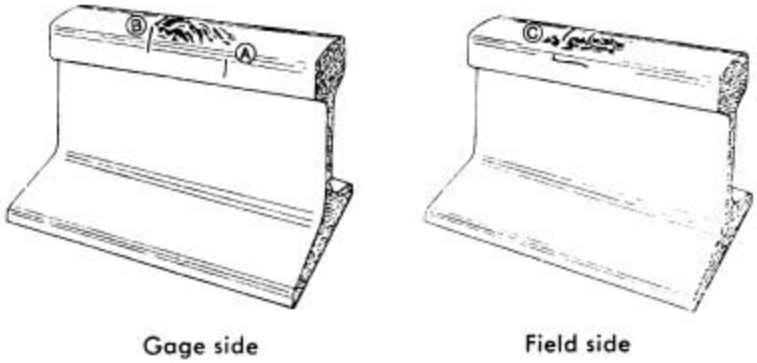

Figure C-10. General appearance of an engine burn fracture

m. **Flaking.**

(1) *Description.* A progressive horizontal separation on the running surface near the gage corner often accompanied by scaling or chipping. Flaking should not be confused with shelling as flaking occurs only on the running surface near the gage corner and is not as deep as shelling.

(2) *Appearance in track.* Can be recognized by one or more of the following characteristics:

(a) Shallow depressions with irregular edges occurring on the running surface near the gage corner. Generally flaking will occur within 1/4 inch of the corner of the rail.

(b) Horizontal hairline cracks along the running surface near the gage corner of the rail head, resembling small slivers (Figure C-11).

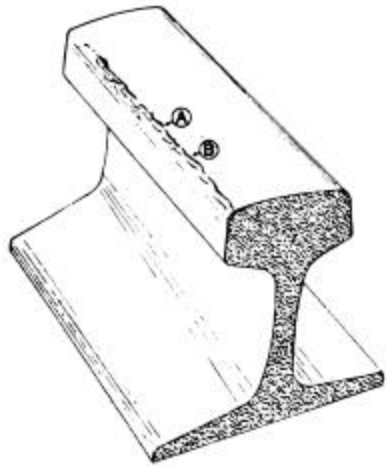

Figure C-11. General appearance of flaking

n. **Flowed rail.**

(1) *Description.* A rolling out of the tread metal beyond the field or gage corner with no breaking down of the underside of the head.

(2) *Appearance in track.*

(a) Surface metal on the head flowed toward the field side giving a creased appearance on the running surface near the field corner.

(b) A protruding lip extending along the length of the rail.

(c) In the advanced stage, flow becomes blade-like, jagged, or nonuniform and may hang down or separate from the rail head (Figure C-12).

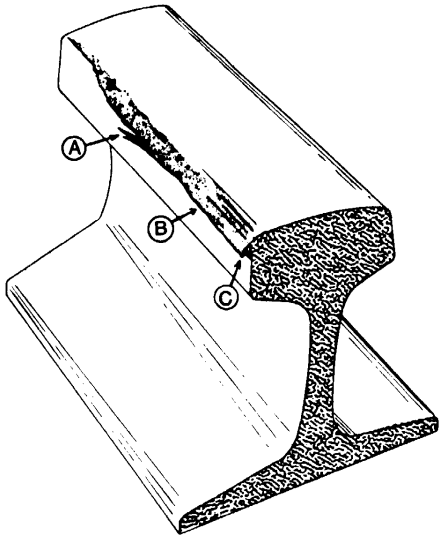

Figure C-12. General appearance of flow

o. **Head/web separation.**

(1) *Description.* A progressive fracture separating the head and web of the rail at the head fillet area.

(2) *Appearance in track.* Can be recognized by one or more of the following characteristics.

(a) In earlier stages, wavy lines appearing along the fillet under the head.

(b) As the condition develops, a small crack will appear along the fillet on either side progressing longitudinally with slight irregular turns upward and downward.

(c) In advanced stages, bleeding cracks will extend downward from the longitudinal separation through the web and may extend through the base (Figure C-13).

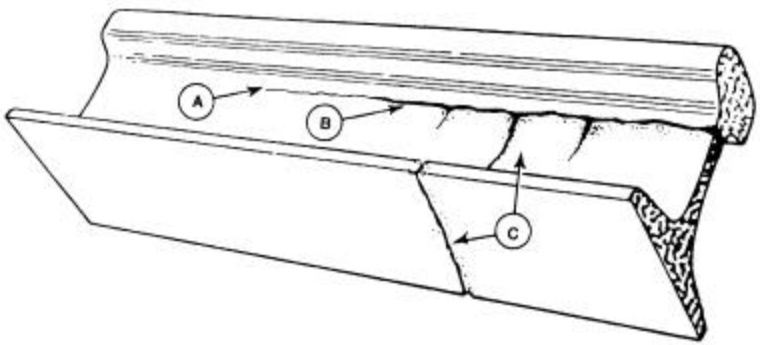

Figure C-13. General appearance of head/web separation

p. **Horizontal split head.**

(1) *Description.* A progressive longitudinal fracture in the rail head parallel to the running surface, usually ¼ inch or more below the running surface.

(2) *Appearance in track.*

(a) Before cracking out, a moderate size horizontal split head will appear as a flat spot on the running surface often accompanied by a slight widening or dropping of the rail head. The flat spot will be visible as a dark spot on the bright running surface.

(b) After cracking out, the horizontal split head will appear as a hairline crack in either side or both sides of the rail head usually 1/4 inch or more below the top of the rail head (Figure C-14).

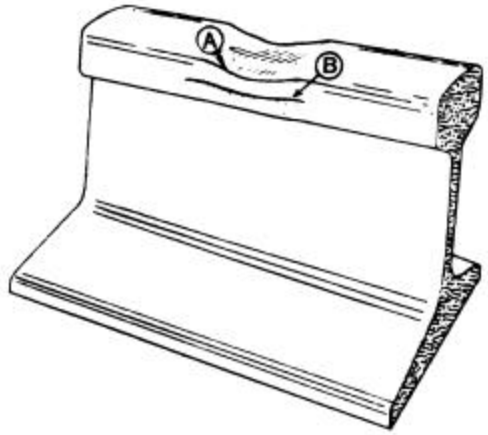

Figure C-14. General appearance of

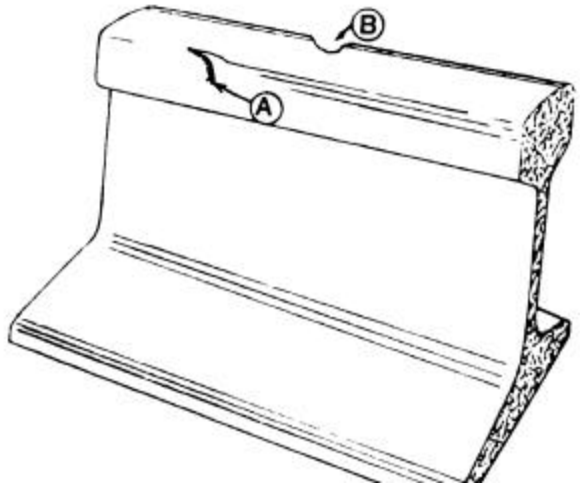

horizontal split head

124

q. **Mill defects.**

(1) *Description.* Deformations, cavities, seams, or foreign material found in the head, web, or base of the rail.

(2) *Appearance in track.* Any deformation in the rail, broken out area, or inclusion (Figure C-15).

Figure C-15. General appearance of mill defects

r. **Piped rail.**

(1) *Description.* A progressive longitudinal fracture in the web of the rail with a vertical separation or seam, forming a cavity in the advanced stages of development.

(2) *Appearance in track.*

125

(a) A bulging of the web on either or both sides. Shallow cracks due to distortion may be found in the bulging surface.

(b) A slight sinking of the rail head may exist

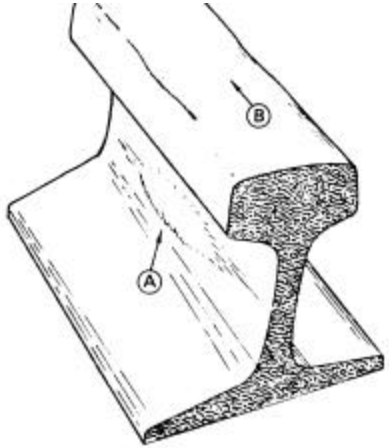

above the pipe (Figures C-16 and C-17).

Figure C-16. General appearance of piped rail

Figure C-17. Cross-sectional view of piped rail

126

s. **Rail wear.**

(1) *Description.* The loss of material from the running surface and side of the rail head due to the passage of wheels over the rail.

(2) *Appearance in track.* Rail wear appears as a rounding of the running surface of the rail head, particularly on the gage side (Figure C-18).

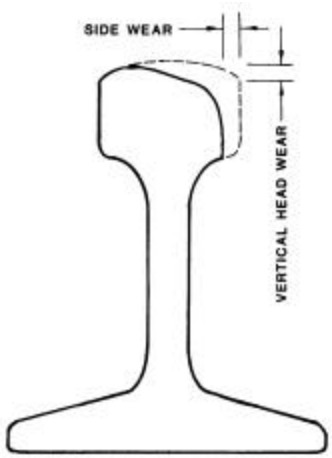

Figure C-18. General appearance of vertical head and side wear

t. **Shelling.**

(1) *Description.* A progressive horizontal separation which may crack out at any level on the gage side but generally at the gage corner. It extends longitudinally not as a true horizontal or vertical crack, but at an angle related to the amount of rail wear.

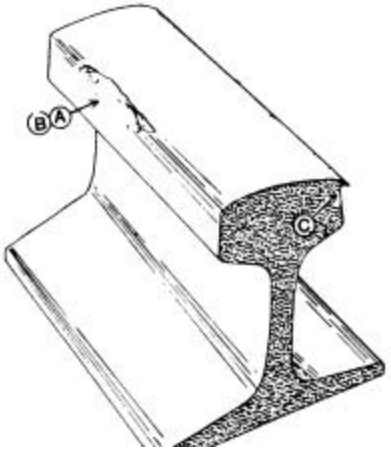

(2) *Appearance in track.* Appears as one or more of the following:

(a) Dark spots irregularly spaced on the gage side

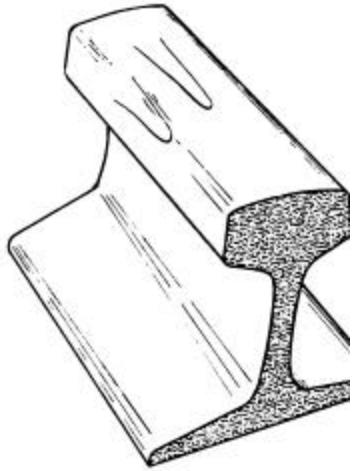

of the running surface.

(b) Longitudinal separation at one or several levels in the upper gage corner with discoloration from bleeding.

(c) If the rail has been turned, the shelly spots will appear on the field side with an irregular overhanging lip of metal similar to flowed rail (Figure C-19).

Figure C-19. General appearance of shelling

u. **Slivers.**

(1) *Description.* A sliver is the separation of a thin, tapered mass of metal from the surface of the head, web, or base of a rail.

(2) *Appearance in track*. Thin slivers on the surface of the rail head and parallel to the rail length similar to wood slivers (Figure C-20)

Figure C-20. General appearance of slivers

v. **Split web.**

(1) *Description*. A progressive fracture through the web in a longitudinal or transverse direction, or both.

(2) *Appearance in track*. Horizontal and/or vertical bleeding cracks in the web (Figure C-21).

w. **Surface bent rail.**

(1) *Description*. The permanent downward bending of the rail ends due to long-term passage of traffic over track with loose or poorly supported joints. Surface bent rail cannot be corrected without replacing the rail.

Figure C-21. General appearance of split web

(2) *Appearance in track*. A downward bending of the rail head near the rail ends giving the appearance of low joints. When track with surface bent rail is surfaced (raised and tamped), the rail ends soon return to a lower elevation. In the more serious cases the vertical curve in the rail head is still visible after surfacing.

x. **Surface damage.**

(1) *Description*. Any damage to the surfaces of the rail, both the running surface and the external surfaces, caused by deep engine burns (running surface) or by striking the rail. Surface damage may lead to detail fractures or engine burn fractures.

(2) *Appearance in track*. Deep engine burns, dents, nicks, cuts, or other abnormalities on the surface of the rail.

y. **Torch cut rail.**

(1) *Description*. Any rail that is cut or otherwise modified (including bolt holes) using an acetylene torch or other open flame.

(2) *Appearance in track*. Irregular or rough rail ends and/or bolt holes (Figure C-22).

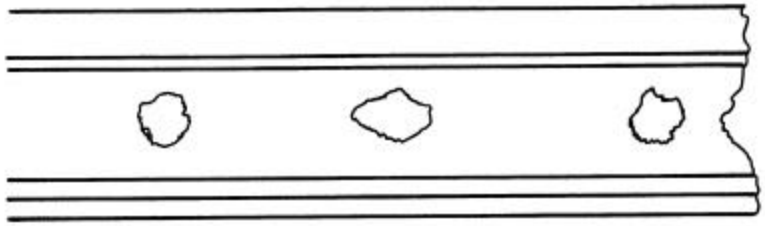

Figure C-22. General appearance of torch cut rail

z. **Transverse defects.** (Compound fissure, transverse fissure, and detail fracture)

(1) *Description.* Any progressive fracture occurring in the rail head having a transverse separation, however slight. The exact type of transverse defect cannot be determined until after the rail is broken for examination.

(2) *Appearance in track.* Not visible until the defect reaches an outer surface. A transverse defect may be recognized by one or more of the following characteristics:

(a) A hairline crack on the side of the head at right angles to the running surface, at the fillet under the head, and occasionally on the running surface.

(b) Bleeding at the crack.

(c) A hairline crack at the gage corner of the rail head. On turned rail, this condition may occur at the field corner. Numerous small gage cracks or head checks are often present but should not cause suspicion unless a single crack extends much farther down the side and/or across the running surface.

(d) A horizontal hairline crack in the side of the rail head turning upward or downward at one or both ends usually accompanied by bleeding. Under such conditions a flat spot will generally be present on the running surface.

(e) A hairline crack extending downward at right angles from a horizontal crack caused by shelling of the upper gage corner of the rail head (Figure C-23).

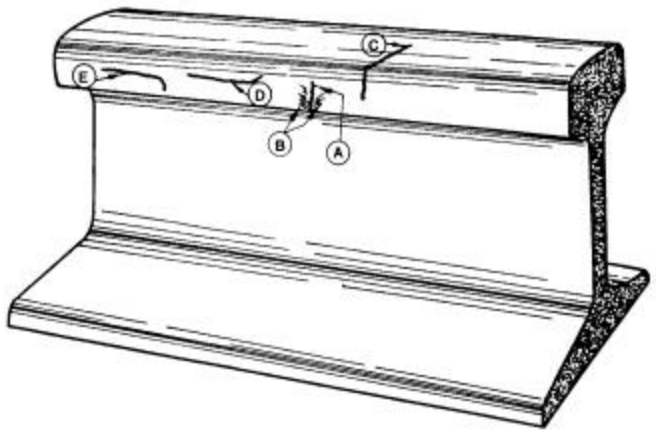

Figure C-23. General appearance of transverse defects

aa. **Vertical split head.**

(1) *Description.* A progressive longitudinal fracture in the head of the rail perpendicular to the running surface.

(2) *Appearance in track.* Can be recognized by one or more of the following:

(a) A dark streak on the running surface.

(b) Widening of the head for the length of the split. The cracked side of the head may show signs of sagging.

(c) Sagging of the head causing a rust streak to appear on the fillet under the head.

(d) A hairline crack near the middle of the rail head.

(e) In advanced stages, a bleeding crack is apparent on the rail surface and in the fillet under the head (Figure C-24).

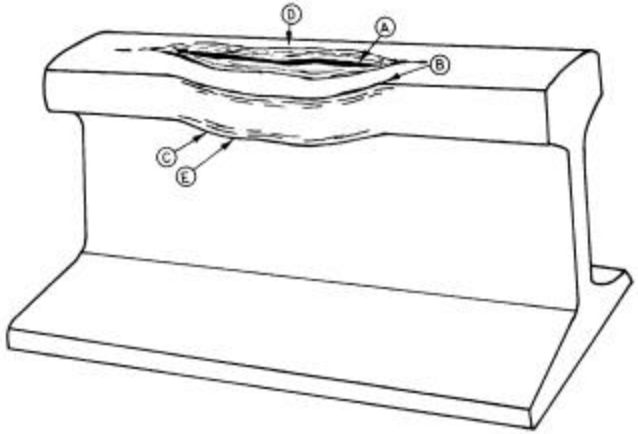

Figure C-24. General appearance of vertical split head

APPENDIX D
Details of Rail Sections

D-1. Table D-1 of this appendix presents a listing of dimensions and properties for various rail sections. This table can be used with Figure D-1 to assist in identifying rail sections and estimating amounts of rail wear.

Figure D-1. Details of T-rail section

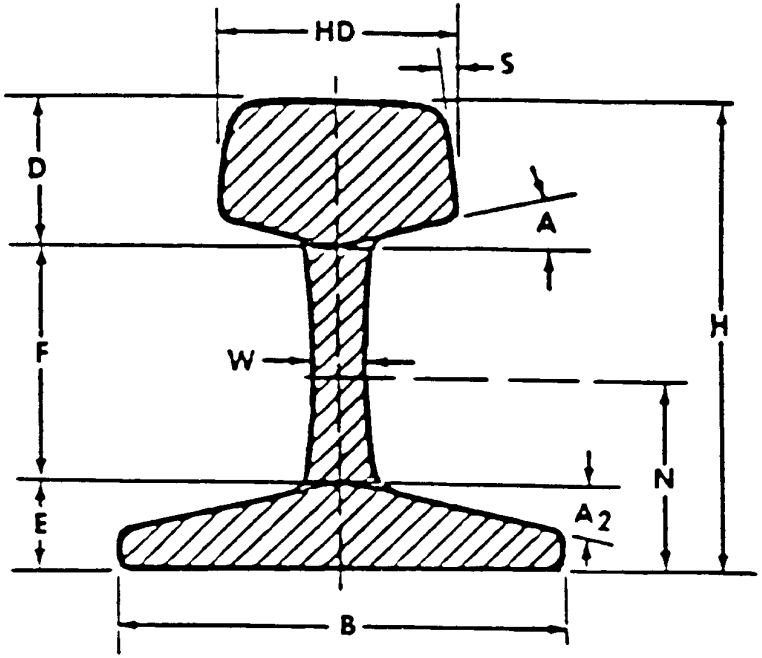

(See Table D-1 for key)

Table D-1. Details of Rail Sections

	Manufacturer's Brand	Rail Dimensions (Inches)

Type	Weight Per yard	Ill. Steel Co. Old No..	Ill. Steel Co. Carnegie Steel Co. T C & I Co. Inland steel Co.	Midvale Steel Co.	Bethlehem Steel Co. Old No.	Bethlehem Steel Co. New No.	Lackawana Steel Co.	Colorado F & I Co.	Height (H)	Base (B)	Head (HD)	Web (W)	Depth of Head (D)	Fishing Height (F)	Depth Of Base (E)	Head angle (A)	Base angle (A_2)	CL of bolts (N)
AREA	140	--	--	--	--	140RE	--	--	7-5/16	6	3	3/4	2-1/16	4-1/16	1-3/16	3 to 1	4 to 1	4
AREA	136	--	--	--	--	136RE	--	1360	7-5/16	6	2-15/16	11/16	1-15/16	4-3/16	1-3/16	4 to 1	4 to 1	3-3/4
AREA	133	--	13331	--	--	133RE	--	1330	7-1/16	6	3	11/16	1-15/16	3-15/16	1-3/16	3 to 1	4 to 1	3-3/4
AREA	132	--	13225	--	--	132RE	--	1321	7-1/8	6	3	21/32	1-3/4	4-3/16	1-3/16	4 to 1	4 to 1	3-7/8
AREA	131	--	13128	--	--	131RE	--	1311	7-1/8	6	3	21/32	1-3/4	4-3/16	1-3/16	4 to 1	4 to 1	4-1/4
AREA	130	--	13025	--	--	130RE	--	1300	6-3/4	6	2-15/16	21/32	1-27/32	3-11/16	1-7/32	4 to 1	4 to 1	3-3/8
AREA	119	--	--	--	--	119RE	--	1190	6-13/16	5-1/2	2-21/32	5/8	1-7/8	3-13/16	1-1/8	4 to 1	4 to 1	3-1/4
AREA	115	--	11525	--	--	115RE	--	1150	6-5/8	5-1/2	2-23/32	5/8	1-11/16	3-13/16	1-1/8	4 to 1	4 to 1	3-1/4
AREA	112	--	11228	--	--	112RE	--	1121	6-5/8	5-1/2	2-23/32	19/32	1-11/16	3-13/16	1-1/8	4 to 1	4 to 1	3-3/4
AREA	110	--	11025	--	--	110RE	--	1100	6-1/4	5-1/2	2-25/32	19/32	1-23/32	3-13/16	1-1/8	4 to 1	4 to 1	3-1/8
AREA	100	--	10025	--	--	100RE	--	10025	6	5-3/8	2-11/16	9/16	1-21/32	3-9/32	1-1/16	4 to 1	4 to 1	2-31/32
ARA-A	100	10020	10020	565	163	100RA	10031	--	6	5-1/2	2-3/4	9/16	1-9/16	3-3/8	1-1/16	4 to 1	4 to 1	2-3/4
ARA-A	90	9020	9020	563	170	90RA	9031	902	5-5/8	5-1/8	2-9/16	9/16	1-15/32	3-5/32	1	4 to 1	4 to 1	2-37/64
ARA-A	80	8020	8020	--	169	--	8031	801	5-1/8	4-5/8	2-1/2	33/64	1-7/16	2-23/32	31/32	4 to 1	4 to 1	2-21/64
ARA-A	70	7020	7020	--	--	--	--	--	4-3/4	4-1/4	2-3/8	1 / 2	1-11/32	2-1/2	29/32	4 to 1	4 to 1	2-5/32
ARA-A	60	6020	6020	--	--	--	--	--	4-1/2	4	2-1/4	15/32	1-15/64	2-29/64	13/16	4 to 1	4 to 1	2-5/128
ARA-B	100	10030	10030	564	161	100RB	10032	1002	5-41/64	5-9/64	2-31/32	9/16	1-45/64	2-55/64	1-5/64	13°	13°	2-65/128
ARA-B	90	9030	9030	561	162	90RB	9032	905	5-17/64	4-49/64	2-9/16	9/16	1-39/64	2-5/8	1-1/32	13°	13°	2-11/32
ARA-B	80	8030	8030	569	171	--	8032	--	4-15/64	4-7/16	2-7/16	35/64	1-15/32	2-15/32	1	13°	13°	2-15/64
ARA-B	70	7030	7030	--	174	--	--	--	4-35/64	4-3/64	2-3/8	33/64	1-23/64	2-17/64	59/64	13°	13°	2-7/128
ARA-B	60	6030	6030	--	--	--	--	--	4-3/16	3-11/64	2-1/8	31/64	1-1/4	2-1/16	7/8	13°	13°	1-29/32
ASCE	100	10001	10040	536	247	100AS	1000	--	5-3/4	5-3/4	2-3/4	9/16	1-45/64	3-5/64	31/32	13°	13°	2-65/128
ASCE	90	9002	9040	535	245	90AS	900	--	5-3/8	5-3/8	2-5/8	9/16	1-19/32	2-55/64	59/64	13°	13°	2-45/128
ASCE	85	8504	8540	531	235	85AS	850	851	5-3/16	5-3/16	2-9/16	9/16	1-35/64	2-3/4	57/64	13°	13°	2-17/64
ASCE	80	8004	8040	530	251	80AS	800	800	5	5	2-1/2	35/64	1-1/2	2-5/8	7/8	13°	13°	2-3/16
ASCE	75	7506	7540	529	214	75AS	750	753	4-13/16	4-13/16	2-15/32	17/32	1-27/64	2-35/64	27/32	13°	13°	2-15/128
ASCE	70	7010	7040	532	237	70AS	700	701	4-5/8	4-5/8	2-7/16	33/64	1-11/32	2-15/32	13/16	13°	13°	2-3/64
ASCE	65	6507	6540	534	236	65AS	650	653	4-7/16	4-7/16	2-13/32	1 / 2	1-9/32	2-3/8	25/32	13°	13°	1-31/32
ASCE	60	6015	6040	533	244	60AS	600	603	4-1/4	4-1/4	2-3/8	31/64	1-7/32	2-17/64	49/64	13°	13°	1-115/128
ASCE	55	5501	5540	537	130	55AS	550	--	4-1/16	4-1/16	2-1/4	15/32	1-11/64	2-11/64	23/32	13°	13°	1-103/128
ASCE	50	5005	5040	542	129	50AS	500	--	3-7/8	3-7/8	2-1/8	7/16	1-1/8	2-1/16	11/16	13°	13°	1-23/32
AT&SF	90	9021	9021	--	173	90SF	9033	903	5-5/8	5-3/16	2-9/16	9/16	1-15/32	3-5/32	1	4 to 1	4 to 1	2-37/64
Bang & Aroost.	70	--	--	--	--	--	703	--	4-3/4	4-3/4	2-7/16	1 / 2	1-13/32	2-19/32	3 / 4	12°	12°	2-3/64
Can Nor	80	8010	8010	--	--	--	804	--	5	5	2-9/16	35/64	1-13/32	2-11/16	29/32	13°	13°	2-1/4
Can Pac	85	--	8524	--	176	85CP	856	--	5-1/8	5	2-1/2	9/16	1-7/16	2-11/16	1	4 to 1	4 to 1	2-11/32
Can Pac	65	6508	6508	--	--	--	654	--	4-31/64	4-3/8	2-1/4	15/32	1-9/32	2-11/32	35/64	4 to 1	4 to 1	2-1/32
C of NJ	135	--	--	--	290	--	--	--	6-1/2	6	3-5/32	3 / 4	2	3-9/32	1-7/32	14°	14°	2-55/64
C & A	70	7002	--	--	--	--	--	--	4-3/8	4	2-35/96	35/64	1-17/24	1-11/12	3 / 4	12°	12°	1-17/24

(Continued)

Notes: See Figure D-1 for key
(Sheet 1 of 3)
All dimensions in inches

Table D-1. Details of Rail Sections (Cont'd)

		Manufacturer's Brand							Rail Dimensions (Inches)									
Type	Weight Per yard	Ill. Steel Co. Old No..	Ill. Steel Co. Carnegie Steel Co. T C & I Co. Inland steel Co.	Midvale Steel Co.	Bethlehem Steel Co. Old No.	Bethlehem Steel Co. New No.	Lackawana Steel Co.	Colorado F & I Co.	Height (H)	Base (B)	Head (HD)	Web (W)	Depth of Head (D)	Fishing Height (F)	Depth Of Base (E)	Head angle (A)	Base angle (A_2)	CL of bolts (N)
C & NW	100	10035	10035	--	--	1000M	1006	--	5-45/64	5-9/64	2-9/16	9/16	1-39/64	2-61/64	1-9/64	13°	13°	2-79/128
C & NW	90	--	9035	--	--	900M	904	--	5-17/32	5-3/32	2-1/2	1 / 2	1-17/32	2-31/32	1-1/32	13°	13°	2-23/64
C & NW	72	7201	7250	581	302	72NP	--	--	4-3/4	4-3/4	2-3/8	9/16	1-13/32	2-1/2	27/32	14°	14°	2-3/32
CB & Q	85	8506	8543	--	85-C	85CB	855	852	5-3/16	5-3/16	2-21/32	9/16	1-35/64	2-3/4	57/64	13°	13°	2-17/64
D & RG	90	--	--	--	--	--	--	906	5-1/2	5-1/8	2-9/16	9/16	1-5/8	2-7/8	1	14°	14°	2-7/16
D & RG	85	--	--	--	--	--	--	850	5-1/4	5-1/4	2-1/2	9/16	1-3/4	2-5/8	7/8	13°	13°	2-3/16
D & RG–C & S	85	--	--	--	--	--	--	853	5-3/8	4-7/8	2-1/2	9/16	1-15/32	2-29/32	1	4 to 1	4 to 1	2-29/64
DL & W	105	--	--	--	105-C	105DL	1052	--	6	5-3/8	2-3/4	5/8	1-23/32	3-1/4	1-1/32	13°	13°	2-21/32
DL & W	101	--	10133	--	299	101DL	10130	--	5-7/16	5-3/8	2-3/4	5/8	1-23/32	2-11/16	1-1/32	13°	13°	2-3/8
DL & W	91	--	9133	--	91-B	--	911	--	5-1/4	5-3/8	2-5/8	5/8	1-41/64	2-11/16	59/64	13°	13°	2-17/64
DL & W	75	--	--	--	75-C	--	753	--	4-11/16	5	2-1/2	1 / 2	1-43/64	2-13/64	13/16	18°	12°45'	1-117/128
Dudley	90	--	--	--	--	--	901	--	5-1/2	5	2-21/32	9/16	1-1/2	3-1/32	31/32	4 to 1	4 to 1	2-31/64
EJ & E	100	--	10050	--	--	--	--	--	5-9/16	5	2-21/32	9/16	1-37/64	2-51/64	1-3/16	4 to 1	4 to 1	2-75/128
Frictionless	125-1/2	--	--	--	125.5-F	--	--	--	7	5-1/2	1-13/16	11/16	2-3/8	3-13/32	1-7/32	18°	14°	2-3/4
Frictionless	98	--	--	--	305	--	--	--	5-27/32	5	2-1/2	9/16	1-31/32	2-25/32	1-3/32	15°	13°	2-31/64
Frictionless	97	--	--	--	97-B	--	--	--	5-7/8	5-9/64	2-1/4	9/16	1-15/16	2-55/64	1-5/64	13°	13°	2-65/128
Frictionless	93	--	--	--	--	--	932	--	6-1/8	5-1/2	2-1/8	19/32	1-13/16	3-3/8	15/16	13°	13°	2-5/8
Frictionless	92	--	--	--	304	---	--	--	5-7/16	5-3/8	1-15/16	5/8	2-3/32	2-5/16	1-1/32	13°	13°	2-3/16
Frictionless	90	--	9039	--	--	--	--	--	5-5/8	5-1/8	2-1/4	9/16	2	2-5/8	1	13°	13°	2-5/16
Frictionless	90	--	9029	--	--	--	--	--	6-3/32	5-1/8	1-59/64	9/16	1-15/16	3-5/32	1	4 to 1	4 to 1	2-37/64
Frictionless	79-1/2	--	--	--	79.5-C	--	--	--	5-3/16	5-3/16	1-15/16	9/16	2-1/32	2-9/32	7/8	13°	13°	2-1/64
Grt Nor	110	--	11036	--	--	110GN	--	--	6-1/2	5-1/2	2-3/4	19/32	1-5/8	3-3/4	1-1/8	1 to 4	1 to 4	3-1/4
Grt Nor	100	--	10036	--	--	100GN	1008	--	5-3/4	5	2-3/4	9/16	1-5/8	3	1-1/8	1 to 4	1 to 4	2-5/8
Grt Nor	90	9010	9024	560	160	90GN	9030	904	5-3/8	5	2-5/8	5/8	1-1/2	2-7/8	1	13°	13°	2-7/16
Grt Nor	90	--	9036	--	--	--	--	--	5-3/8	5	2-5/8	19/32	1-15/32	2-7/8	1-1/32	13°	13°	2-13/16
Grt Nor	85	8509	8553	--	--	--	854	--	5	5	2-21/32	21/32	1-19/32	2-1/2	29/32	14°	14°	2-5/32
Grt Nor	80	8009	--	--	--	--	802	--	5	5	2-13/32	5/8	1-5/8	2-1/2	7/8	14°	14°	2-1/8
Grt Nor	77-1/2	77501	--	--	--	--	775	--	5	5	2-3/8	5/8	1-11/16	2-1/2	13/16	14°	14°	2-1/16
Hock Val	80	--	--	540	--	--	--	--	5	4-59/64	2-31/64	29/64	1-95/128	2-25/64	111/128	13°	13°	2-1/16
Interb'g'h	100	10005	10005	--	100-E	100RT	1005	--	5-3/4	5-3/4	2-7/8	9/16	1-45/64	3-5/64	31/32	13°	13°	2-65/128
Interb'g'h	90	--	9050	--	90-E	90RT	902	--	5	5	2-7/8	11/16	1-25/32	2-11/32	7/8	13°	13°	2-3/64
Lehigh Val	136	--	--	--	136-C	136LV	--	--	7	6-1/2	2-15/16	21/32	1-7/8	3-7/8	1-1/4	4 to 1	4 to 1	3-1/16
Lehigh Val	110	--	11033	--	110-B	110LV	--	--	6	5-1/2	2-7/8	19/32	1-7/8	3-1/16	1-1/16	4 to 1	4 to 1	2-3/4
Mo Pac	85	8507	8550	--	--	--	853	--	5-7/32	5-1/4	2-15/32	75/128	1-3/4	2-39/64	55/64	13°	13°	2-21/128
Mo Pac	75	7512	7550	528	289	75MP	754	--	4-3/4	4-3/4	2-9/16	9/16	1-7/16	2-15/32	27/32	13°	13°	2-5/64
Nat Ry Mex	75	--	--	--	128	--	--	--	5	5	2-3/4	1 / 2	1-3/8	2-7/8	3/4	12°	12°	2-3/16

(Continued)

Notes: See Figure D-1 for key
(Sheet 2 of 3)
All dimensions in inches

Table D-1. Details of Rail Sections (Cont'd)

		Manufacturer's Brand							Rail Dimensions (Inches)									
Type	Weight Per yard	Ill. Steel Co. Old No..	Ill. Steel Co. Carnegie Steel Co. T C & I Co. Inland steel Co.	Midvale Steel Co.	Bethlehem Steel Co. Old No.	Bethlehem Steel Co. New No.	Lackawana Steel Co.	Colorado F & I Co.	Height (H)	Base (B)	Head (HD)	Web (W)	Depth of Head (D)	Fishing Height (F)	Depth Of Base (E)	Head angle (A)	Base angle (A_2)	CL of bolts (N)
NYC	120	--	--	--	--	--	1201	--	7	6	3	21/32	1-5/8	4-5/16	1-1/16	4 to 1	4 to 1	3-7/32
NYC	105	--	10522	--	105-B	105DY	1051		6	5-1/2	3	5/8	1-5/8	3-13/32	31/32	4 to 1	4 to 1	3-1/8
NYC	100	10003	10022	--	175	--	1001		6	5-1/2	3	19/32	1-5/8	3-13/32	31/32	4 to 1	4 to 1	2-5/8
NYC	95	--	--	--	--	--	951	--	5-1/32	5-1/2	3	5/8	1-9/16	2-15/32	1	4 to 1	4 to 1	2-15/64
NYC	80	8008	8022	543	220	80DY	801	--	5-1/8	5	2-21/32	17/32	1-1/2	2-5/8	1	4 to 1	4 to 1	2-5/8
NYC & St L	85	8521	8521	--	172	--	8531	--	5-3/8	4-7/8	2-17/32	17/32	1-29/64	2-15/16	63/64	4 to 1	4 to 1	2-29/64
NYNH & H	107	--	--	--	172-D	107NH	1072	--	6-1/8	5-1/2	2-3/4	19/32	1-23/32	3-11/32	1-1/16	13°	13°	2-47/64
NYNH & H	100	10004	10034	--	100	100NH	1002	--	6	5-1/2	2-3/4	19/32	1-23/32	3-11/32	1-1/16	13°	13°	2-39/64
Nor Pac	66	6602	6602	547	--	--	--	--	4-17/32	4-1/2	2-5/16	17/32	1-27/64	2-11/32	49/64	13°	13°	1-15/16
PS-Penn	130	--	13031	589	130-B	130PS	13030	--	6-5/8	5-1/2	3	11/16	2	3-13/32	1-7/32	18°	14°	2-3/4
PS-Penn	125	--	12531	584	308	125PS	12530	--	6-1/2	5-1/2	3	21/32	1-7/8	3-13/32	1-7/32	18°	14°	2-59/64
PS-Penn	100	10031	10031	558	96-A	100PS	10030	--	5-11/16	5	2-43/64	9/16	1-13/16	2-25/32	1-3/32	15°	13°	2-31/64
PS-Penn	85	8530	8531	559	67-A	85PS	8530	--	5-1/8	4-5/8	2-1/2	17/32	1-21/32	2-15/32	1	15°	13°	2-15/64
PRR	85	8503	8533	500	67	85PG	852	--	5	5	2-9/16	17/32	1-3/4	2-3/8	7/8	13°	13°	2-1/16
PRR	70	7005	7033	504	--	70PR	--	--	4-1/2	4-1/2	2-7/16	1 / 2	1-19/32	2-1/8	25/32	13°	13°	1-27/32
P & R	100	--	10032	--	165	100RG	1007	--	5-5/8	5-3/8	2-21/32	9/16	1-45/64	2-55/64	1-1/16	13°	13°	2-63/128
RG So	52	--	--	--	--	--	--	521	4	4	2-1/8	25/64	1-23/64	2	41/64	13°	13°	1-41/64
Russian	67-1/2	--	--	587	--	--	--	--	5-3/64	4-21/64	2-23/64	15/32	1-29/64	2-11/16	29/32	1 to 3	1 to 3	2-1/4
Sea A Ln	85	--	8522	--	261	--	851	--	5-1/4	5	2-11/16	17/32	1-5/8	2-3/4	7/8	14°	14°	2-1/4
Sea A Ln	75	--	7522	--	221	--	--	--	5	5	2-9/16	1 / 2	1-3/8	2-3/4	7/8	14°	14°	2-1/4
Soo Ln	85	8520	8520	--	--	--	--	--	5-3/8	4-7/8	2-1/2	9/16	1-15/32	2-29/32	1	14°02'11"	14°02'11"	2-29/64
UP	90	9003	9023	--	--	---	--	901	5-3/4	5-3/8	2-3/4	17/32	1-1/2	3-3/8	7/8	13°	13°	2-9/16
UP	75	7513	7523	--	75-B	--	--	754	5	5	2-9/16	33/64	1-3/8	2-13/16	13/16	13°	13°	2-1/4
UP	75	7524	7524	--	--	75SP	--	757	4-15/16	4-7/16	2-7/16	33/64	1-3/8	2-5/8	15/16	4 to 1	4 to 1	2-1/4

Miscell	75	--	--	--	92	--	--	--	5	5	2-1/2	9/16	1-7/16	2-47/64	53/64	13°	13°	2-1/8
Miscell	70	--	--	--	97	--	703	--	4-3/4	4-3/4	2-7/16	1 / 2	1-13/32	2-19/32	3 / 4	12°	12°	2-3/64
Miscell	67	6704	6704	515	--	--	--	--	4-1/2	4-1/2	2-13/32	1 / 2	1-5/8	2-1/8	3 / 4	13°	13°	1-13/16
Miscell	67	--	6733	--	--	--	--	--	4-1/2	4-1/2	2-13/32	1 / 2	1-5/8	2-1/8	3 / 4	13°	13°	1-13/16
Miscell	65	6501	--	--	--	--	--	--	4-3/8	4-7/16	2-3/8	29/64	1-1/2	2-5/32	23/32	14°30'	12°30'	1-51/64
Miscell	65	6504	--	--	--	--	--	--	4-1/2	4-1/2	2-7/16	1 / 2	1-31/64	2-19/64	23/32	13°	13°	1-7/8
Miscell	60	6001	6051	--	--	--	--	--	4-1/4	4-1/16	2-5/16	1 / 2	1-7/16	2-1/8	11/16	14°	12°50'	1-3/4
Miscell	60	6017	6033	503	--	--	--	--	4-1/4	4-13/64	2-21/64	29/64	1-55/128	2-7/64	91/128	13°	13°	1-49/64
Miscell	56	5610	5610	--	--	--	--	--	4-1/4	3-31/32	2-7/32	13/32	1-7/16	2-1/8	11/16	14°	12°50'	1-13/16
Miscell	56	--	--	511	--	--	--	--	4	3-53/64	2-19/64	29/64	1-51/128	2-59/64	87/128	12°	12°	1-41/64
Miscell	56	5616	5633	--	--	--	--	--	4-1/4	4-1/8	2-1/4	3/8	1-27/64	2-1/8	45/64	13°	13°	1-49/64
Miscell	56	--	--	--	--	--	--	562	4-1/4	4-1/8	2-1/4	58/128	1-7/32	2-17/64	49/64	13°	13°	1-115/128

Notes: See Figure D-1 for key
(Sheet 3 of 3)
All dimensions in inches

APPENDIX E
Summary of Standards

Summary of Standards**

Item	Maintenance Standards: Deviation for Track Category A	B	C	Paragraph Reference in MO-103.9	Safety Standards: Restricted Operation 10 mph	Close to Traffic	Paragraph Reference in FRA TSS	Construction/Repair Tolerances
Roadway	Pumping Track*			3-1	*		None	Not Present
	Erosion or Washouts*				*			
	Slides, Slippage or Slope Instability *				*			
	Settlement*				*			
	Washouts*				*			
Drainage	Water Diverted onto track*			3-2	*		213.33	
	Hazardous Drainage Structures*				*			
	Inadequate Drainage Structures*				*			
	Obstruction of flow*				*			
Vegetation	Interferes with visibility along Right-of-Way*			3-3	*		213.37	
	And at Highway Crossings							
	Obstructs drainage*				*			
	Interferes with Train Operations and/or Track Inspection*				*			
	Presents Fire Hazard*				*			
	Interferes with Personnel Walking within 8 ft of Track Centerline*				*			
	Brushes Side of Rolling Stock*				*			
Ballast	Fouled Ballast*			4-1	*		213.103	
	Covers Top of Ties*				*			
	Insufficient Ballast*				*			
Ties:			*				213.109	See 5-4.d.
Min. Nondefective per 39 ft Tangent and LT 2 ° Curves GT 2 °	12 13	10 11	8 9	5-4.c.(1)	Less than 8 Less than 9	Less than 5 Less than 6	213.109 (c) and (d)	
Max. Consecutive Defective Tangent and LT 2 ° Curves GT 2 °	2 1	2 1	3 2	5-4.c.(1)	4 3	5 or more 4 or more		0
Joint Ties:							213.109(f)	
No. of	2	1	1	5-4.c.(2)	1	0		2

NonDefective Required – 24” C/L								
Missing/Skewed	Tie missing or skew greater than 8 in. in 3 or more consecutive ties			5-4.d., 5-4.e., 5-4.f.		---	---	See 5-4.d.
Tie Plates	Improper type broken flame cut or defective*			6-1 and 6-2	---	---	213.123	See 6-2.

* Operating restrictions may be needed depending on seriousness of the condition.

** Further information regarding classification of defects and operating restrictions is provided in NAVFACINST 11230.1.

Summary of Standards**

Item	Maintenance Standards				Safety Standards			Construction/Repair
	Deviation for Track Category			Paragraph Reference	Restricted Operation		Paragraph Reference	
	A	B	C	in MO-103.9	10 mph	Close to Traffic	in FRA TSS	Tolerances
Spikes	Improper type, broken, flame cut, or defective.			6-1 and 6-3	---	---	213.127	See 6-3
	Insufficient Number*							
	Improper Installation							
	Improper Spiking Pattern through slots in angle bar							
	Loose or missing spikes*							
	Spike beneath rail base							
Joint Bars	Improper type, flame cut or defective*			6-4.a.	---	---	213.121	See 6-4.a.
Compromise Joints	Improper type, design, dimension, home-made, flame cut, or defective*			6-4.b.	---	---	213.121	See 6-4.b.
Joint Bars	Cracked or broken*			6-4.c.	---	Cracked or broken between center bolt holes	213.121	---
Track Bolts	None loose or missing			6-4.e.	LT2 tight per rail	LT1 tight per rail	213.121	None loose or missing
Rail End Mismatch	1/8”	1/8”	3/16”	6-4.f.	GT 3/16"	GT 1/4"	213.115	0"
Rail Joint Gap	3/4"	3/4"	1-"	6-4.g.	GT 1-1/4"	---	---	---
Rail - Defective	See Table 7-1			7-1	---	---	213.113	---
Turnouts - General	Improper materials, rail not same weight/ section compromise joint in turnout*			8-1 through 8-2	---	---	213.133	---
- Switch Point Gap	1/8"	1/8"	1/8”	8-3.b.	GT 1/4"	---	213.135	0"
- Broken/Worn Points	Broken/worn GT 1/2" down & 6 in back from point			8-3.c.	---	---	213.135	---
- Point Rail Elevation	Point higher than stock rail. Point rail beyond taper lower than stock rail*			8-3.d.	---	---	213.135	---
- Lever Latches & Point Locks	Missing damaged insecure otherwise inoperative*			8-3.e.	---	---	213.135	---
- Switch Stand	Not secure*			8-3.f.	---	---	213.135	---
- Connecting Rod Switch Rod Switch Clips	Insecure damaged or shimmed			8-3.g. & 8-3.i.	---	---	213.135	---
- Switch Heel	Heel not fully secure, heel bolts missing			8-3.j.	---	---	213.135	---
- Rail Braces	Improper materials or installation			8-3.k.	---	---	213.135	---
- Frog Point Wear/Damage	GT 1/2" down and 6" back all categories			8-4	GT 5/8" down and 6" back	---	213.137	1/8" of original contour
- Frog Surface Wear	5/16"	5/16"	3/8"	8-4.b.	GT 3/8"	---	213.137	1/8" of original

								contour

* Operating restrictions may be needed depending on seriousness of the condition.

** Further information regarding classification of defects and operating restrictions is provided in NAVFACENGCOM 11230.1.

Summary of Standards**

Item	Maintenance Standards				Safety Standards			Construction/Repair
	Deviation for Track Category			Paragraph Reference	Restricted Operation		Paragraph Reference	
	A	B	C	in MO-103.9	10 mph	Close to Traffic	in FRA TSS	Tolerances
Turnouts - Frog Guarding Face Wear	5/16"	5/16"	5/16"	8-4.d.	GT 3/8"	---	213.141	1/8" of original contour
- Frog Flangeway Width	1-5/8"	1-5/8"	1-5/8"	8-4.g.	LT 1-5/8"	LT 1-1/2"	213.143	1-7/8"
- Frog Flangeway Depth	1-1/2"	1-1/2"	1-1/2"	8-4.h.	LT 1-1/2"	LT 1-3/8"	213.137	1-7/8"
- Guard Check Gage	54-3/8"	54-3/8"	54-3/8"	8-5.c.	LT 54-1/4"	LT 54-1/8"	213.143	54-5/8"
- Guard Face Gage	53.0"	53.0"	53.0"	8-5.d.	GT 53-1/8"	GT 53-1/4"	213.143	52-3/4"
- Guard Rail Flangeway Width	1-5/8"	1-5/8"	1-5/8"	8-5.e.	LT 1-5/8"	LT 1-1/2"	213.143	1-5/8"
Rail Crossing Flangeway Width	1-5/8"	1-5/8"	1-5/8"	9-2.b.	LT 1-5/8"	LT 1-1/2"	213.133	1-7/8"
Rail Crossing Flangeway Depth	1-1/2"	1-1/2"	1-1/2"	9-2.b.	LT 1-1/2"	LT 1-3/8"	213.133	1-7/8"
Road Crossing Flangeway Width	2-1/2"	2-1/2"	2-1/2"	10-2.a.	---	---	---	21/2 to 3"
Road Crossing Flangeway Depth	2.0"	2.0"	2.0"	10-2.b.	---	---	---	GE 2.0"
Gage - Minimum	56-1/8"	56-1/8"	56.0"	12-2.d.	---	Less than 56.0"	213.53	See 12-2.c.
-Maximum	57-1/2"	57-1/2"	57-3/4"		Greater than 57-3/4"	Greater than 58.0"		
Cross level - Tangent	1-1/4"	1-1/2"	1-3/4"	12-3.	GT 2.0"	GT 3.0"	213.63	0
- Curves	1-1/4"	1-1/2"	1-3/4"		GT 2.0"	GT 3.0"		Designated Superelevation
Warp	1-3/4"	1-3/4"	2"	12-4.	GT 2.25"	GT 3.0"	213.63	0
Alignment - Tangent	1-3/4"	2"	3"	12-6.	GT 3.0"	GT 5.0"	213.55	0
- Curves	1-3/4"	2"	3"		GT 3.0"	GT 5.0"		Degree of Curvature
Profile	2"	2-1/4"	2-3/4"	12-7.	GT 2-3/4"	GT 3.0"	213.63	0

* Operating restrictions may be needed depending on seriousness of the condition.

** Further information regarding classification of defects and operating restrictions is provided in NAVFACENGCOM 11230.1.