Transportation Systems 2000 Workshop
United States Army, Air Force, and Navy
San Antonio, TX, February 2000

ISSUES IN PAVEMENT EVALUATION

by

Dr. L. J. Malvar
NFESC, Port Hueneme, CA 93043-4370

ABSTRACT

Prioritization in pavement maintenance and repair for Navy and Marine Corps airfields are based on PCI (Pavement Condition Index) surveys and PCN (Pavement Classification Number) assessments. These are complementary techniques, the first one relying on visual inspection of both structural and non-structural deficiencies, the second one relying on an NDT (non-destructive technique) to determine the load carrying capacity of the pavement. The PCN NDT load carrying evaluation results in complex tables of allowable loads for each aircraft type and for each feature within an airfield. It is shown that color coded charts can relay the same information in a simpler way. As an alternative to imposing stringent load limits, these color-coded charts can also represent life expectancy of the pavement under current traffic conditions. Since restricting the mission via load limits is undesirable, this approach is being followed in the current evaluation of Navy and Marine Corps airfield pavements.

INTRODUCTION

The PCI (Pavement Condition Index) surveys and PCN (Pavement Classification Number) assessments are non-destructive techniques (NDT) to evaluate the current and projected serviceability of airfield pavements. Both techniques are complementary and allow for the determination of the required maintenance and repair (M&R). Further, the PCI allows for quick prioritization of all M&R projects, while the PCN allows for determination of restrictions on aircraft type and load for safe pavement usage. The PCN load carrying evaluation results were previously expressed via complex tables of allowable loads for each aircraft type and for each feature within an airfield. As an alternative to imposing stringent load limits, simple color-coded charts can also represent life expectancy of the pavement under current traffic conditions and result in much reduced aircraft weight restrictions.

PCI DEFINITION AND PROCEDURES

The condition survey, adopted by the Navy in 1985, is based on methodology developed by the U.S. Army Construction Engineering Research Laboratory and is commonly known as the Pavement Condition Index (PCI) procedure (ASTM D-5340). The PCI is a quantitative rating system in which pavements are assigned a numerical value from 0 to 100 based upon their apparent structural integrity and functional surface condition. The PCI is determined during a visual distress survey in which pavement distresses are quantified by type, amount, and severity level, for representative sample units. The mean pavement PCI, the average of the PCI values for all sample units of a given pavement, can be computed by extrapolating the distresses from all measured sample units. The mean PCI of a pavement section describes its overall condition and thus is a general indicator of the level of M&R work needed. Results are presented in color-coded charts (Figures 1, 2), with colors varying from GREEN (excellent) to BLACK (failed).

The Structural Condition Index (SCI), also known as PCI_{STR}, is the PCI obtained from considering only those distresses caused by structural deficiencies [1]. Because the PCI includes deducts due to non-structural deficiencies, it is difficult to judge the required overlay thickness based on a low PCI alone. In fact if most deficiencies are non-structural, the minimum recommended overlay thickness is typically adequate (e.g. 2 inches for flexible pavements, and 6 inches for rigid ones). However, just like the PCN, the SCI is based only on structural deficiencies, and can be used to determine overlay requirements for concrete slabs [1]. Since the PCN reflects the projected pavement capacity, the PCN is related to the projected SCI.

It is then apparent that the SCI provides a complementary tool to allow the assessment of pavement capacity. A pavement with a low PCI but a high SCI would not need to be replaced, perhaps just overlaid with the minimum thickness. This can translate into significant savings. As a consequence, the SCI is expected to be routinely calculated together with the PCI in version 5 of the MicroPAVER program [2,3]. Although initially defined for concrete pavements, the SCI concept has also been recently extended to flexible pavements (in version 5 of MicroPaver).

MIL-HDBK-1021/4 [1] indicates that a minimum acceptable value for the SCI is 35. This corresponds to having 60% of the concrete slabs shattered with medium severity, or 50% of the slabs with high severity cracks. In practice this corresponds to a high level of deterioration, and the Navy and Army have used a minimum SCI value of 50, below which slab replacement is recommended [4,5]. In the past a conservative SCI value of 80 has also been used (mostly for design purposes). The latter value corresponds to the formation of one or more cracks in 50% of the trafficked slabs [4].

ACN/PCN METHOD FOR PAVEMENT EVALUATION

Pavement evaluation via non-destructive testing (NDT) is completed using a Heavy Weight, or Falling Weight, Deflectometer (HWD or FWD). The HWD is an impact load device that applies a single-pulse vertical transient load (Figure 3). Load is measured with a load cell at the center of the plate and velocity gages are used to derive deflections (Figure 4).

The load-carrying capacity of a pavement with an expected life of 10 years is a function of the current pavement strength, the weight and type of aircraft using the airfield, and the expected number of passes. A standardized method of reporting pavement load-carrying

capacity was developed by the International Civil Aviation Organization (ICAO) [6,7], and later further enhanced by the U.S. Army Corps of Engineers (USACOE) [4,5,8,9], and the U.S. Navy, NFESC [9-13]. The procedure and its enhancements have been evaluated and adopted by the Navy Airfield Pavement Team, which includes members of all NAVFAC Engineering Field Divisions, NAVFAC Chief Engineer's Office, the USACOE Waterways Experiment Station Geotechnical Branch, and the U.S. Air Force Airfield Pavement Evaluation Team, HQ AFCESA/CESC.

The ACN is a number that expresses the relative structural effect of an aircraft on either flexible (asphalt) or rigid (concrete) pavements for a specific subgrade strength in terms of a standard single wheel load. The PCN is a number that expresses the relative load-carrying capacity of a pavement for a given pavement life (i.e. aircraft type and number of passes) in terms of a standard single wheel load. If the ACN/PCN ratio is equal or less than 1, the predicted failure life of the pavement would equal or exceed the design pavement life, i.e. the pavement would perform satisfactorily for the analysis period. If the ACN/PCN ratio is greater than 1, pavement strengthening or limits on usage will be necessary.

Pavement Usage Restriction

The first objective of the PCN evaluation is to ensure safe pavement usage by restricting runway use by excessively heavy/large aircraft. In the past, this was implemented via severe weight restrictions for all aircraft types, significantly restricting the airfield mission. Restrictions are applied to the critical aircraft, and any other more pavement-damaging aircraft. In the past the critical aircraft was chosen from the traffic mix as the one requiring the greatest pavement thickness. This approach is adequate if only one of the aircraft (or aircraft type) is responsible for most of the usage. In some cases, e.g. when two very different aircraft are equally demanding on the pavement, very different PCN values may be obtained for only slight variations in the traffic mix, depending on which becomes critical. If the PCN is based on the smaller of the aircraft, this will typically place moderate pavement usage restrictions on the smaller one, and severe restrictions on the larger one. Conversely, if the PCN is based on the larger aircraft, this will typically result in moderate pavement usage restrictions on the larger one, and none on the smaller. This latter option is preferable.

In the new Navy approach, the critical aircraft is chosen among the aircraft that regularly use the pavement, and is the one that results in the largest PCN value. This definition insures that (1) use by the most pavement-damaging aircraft is restricted, and (2) airfield mission restrictions are minimized. This approach is similar to that adopted by FAA for mixed aircraft [14].

For Navy airfields, typically 5 aircraft types, or groups, are used. Each group is represented by one aircraft: F-14 for single tricycle, P-3 for dual-tricycle, C-130 for single tandem tricycle, C-141 for dual tandem tricycle, and C-5A for twin delta tandem. Special aircraft not included in these groups can be studied separately (e.g. KC-10 and DC-10-30, or C-17, or small aircraft for the case of outlying training airfields) [9]. The critical aircraft is typically chosen as one of these representative aircraft. The reported FLIP PCN for the runway is chosen as the lowest PCN of all the runway features.

Pavement Life Expectancy

The second objective of the PCN evaluation is to assess the capability of the pavement to carry out its mission for the expected life, e.g. 10 years for Navy and Marine Corps bases. If the pavement is not up to par, only part of the 10-year mission will be completed.

In the past, priority was given to the reaching the target life of 10 years. This was achieved by placing significant restrictions on traffic, typically on weights. Since the evaluations were also conservative, this resulted in some Navy bases being practically unable to service their own aircraft, significantly affecting their mission. In addition, the results were given in the form of PCN maps with indication of the PCN for each section (or feature) of the airfield pavement, but with no indication of the critical aircraft chosen. As a consequence, such maps (see Figure 5) were extremely difficult to understand and to use.

In the new Navy approach, it was recognized that, for pavement purposes, this mission consists of 3 components: aircraft weights to be supported, aircraft passes, and desired pavement life. Hence the reduction in mission can be accomplished in 3 ways: by reducing the aircraft weights (and keeping passes and expected life constant), by reducing the aircraft passes (and keeping the other two constant), or by realizing that at the current weight and passes the expected life will be shorter. The Navy decided that this last option was most adequate since it would be the least restrictive of day-to-day operations. Hence results are typically shown in terms of pavement life expectancy, and urgency of repairs for each inadequate feature. This can be reported in the form of a four-color Structural Condition (PCN) map (Figure 6).

Pavement Life Expectancy – Structural Condition (PCN) Color Map

The airfield life pavement expectancy can be reported in the form of a four-color Structural Condition (PCN) map (Figure 6), where the colors represent:

B (BLUE) - Expected pavement life greater than 10 years
G (GREEN) - Expected pavement life less than 10 years
Y (YELLOW) - Pavement in need of structural repair/upgrade
R (RED) - Very weak or failed pavement, no aircraft recommended

This is the adopted reporting procedure for Navy Pavements [9] based on the Pavement Group recommendations [11,12].

However, the colors could alternatively be interpreted as indicating the weight restrictions necessary (at the original level of passes) to insure that the feature will last the projected 10 years:

B (BLUE) - No weight restriction
G (GREEN) - To be used only by half-loaded aircraft
Y (YELLOW) - To be used only by unloaded aircraft
R (RED) - Not recommended for aircraft traffic until upgraded.

Finally, the colors could also be interpreted as indicating the pass level restrictions (at the original weight) necessary to insure that the feature will last the projected 10 years. As indicated previously, these last two interpretations were considered too restrictive of the airfield mission and were not adopted.

The color structural condition map is found as follows. First the PCN of the design critical aircraft is found. This PCN is then compared to the ACN values in Table 1. For the design critical aircraft, and the given pavement and subgrade type, the PCN can be compared to 3 ACN values corresponding to a loaded, half-loaded, and unloaded aircraft. Colors are determined from the comparison:

- If $ACN_{fully\text{-}loaded} \leq PCN$ the color is blue
- If $ACN_{half\text{-}loaded} \leq PCN < ACN_{fully\text{-}loaded}$ the color is green
- If $ACN_{empty} \leq PCN < ACN_{half\text{-}loaded}$ the color is yellow
- If $PCN < ACN_{empty}$ the color is red

Since the ratios of empty to full weight are somewhat similar for the representative aircraft used, the colors tend to remain constant, even if the critical aircraft varies.

Is should be noted that this airfield pavement evaluation can be viewed as a life expectancy prediction. As such, it will depend on both the current pavement status, and the projected traffic. If the actual traffic later varies significantly from the projected traffic, a new evaluation will be necessary. Note that some increase in pass levels could typically be accommodated by blue areas, without significantly affecting the pavement life.

Design versus Evaluation - Aircraft Weights and Passes

To complete a realistic life expectancy prediction, a realistic future demand on the pavement has to be known, in terms of using aircraft, their actual weight, and the expected passes. Traditionally, Navy pavement evaluations were often completed with maximum war-time take-off weights for the representative aircraft, and design number of passes. Actual aircraft weights are much lesser than this maximum, hence very conservative pavements assessments were completed, resulting in unnecessary expenditures for overlays. Lately evaluations have been completed using maximum peace-time weights for take-off (Table 1), and maximum design landing weight for landing. More recently, actual average operational aircraft weights have been collected for several Navy aircraft [13]. In the evaluations, an average plus one standard deviation can be used.

In the past, design levels of passes were also used. These levels were typically in excess of actual passes, and would also result in conservative evaluations. In current evaluations, actual projected numbers of passes are estimated, based on current traffic.

Comparison between Navy and Air Force PCN

The Navy adopted procedure allows for (1) determination of life expectancy, (2) determination of required overlays, and (3) aircraft restriction via the FLIP PCN. However, it is difficult to use the color maps, or the PCN values to compare between Navy airfields, since both are related to characteristics of each airfield (e.g. critical aircraft type and pavement usage at each airfield).

In contrast the Air Force PCN is designed to specifically compare airfield pavements among each other. The Air Force PCN is determined with one single demand for all airfields, traditionally 50,000 passes of Group 9 aircraft (C-141). By choosing a standard aircraft at a standard number of passes, the PCN values obtained can be compared from pavement to pavement, and indicate their relative capacity. This can be of direct use for BRAC applications, where aircraft are reassigned from one base to another. This Air Force PCN could be used for overlay requirements only if all the bases are required to perform at a comparable level.

CURRENT NAVY USE OF PCI AND PCN EVALUATIONS

PCI and PCN evaluations provide complementary tools for the assessment of the serviceability of pavements, and maintenance prioritization. Yearly reports provide PCI and PCN results in the exclusive form of color-coded charts for all 66 Navy and Marine Corps airfield pavements worldwide, allowing for the determination of their required maintenance (e.g. Figures 1, 2, 6) [15]. For each major claimant, PCI prioritization of all airfield pavement maintenance projects is also completed yearly [16]. These NDT techniques are also applicable to roadways, bridges, and any other pavement.

CONCLUSIONS

It was shown that the SCI is a complementary decision-making tool to the PCI that allows both an assessment of pavement structural capacity, and the type of repair required (overlay versus replacement). Since the SCI is readily available from the standard PCI data, it will be calculated and reported during future routine pavement condition surveys.

Navy PCN evaluations allow for realistic pavement life expectancy and overlay requirements, and also provide safeguards to prevent airfield usage by excessively pavement damaging aircraft. Life expectancy results are reported in the form of color-coded Structural Condition (PCN) maps, which indicate restricted and unrestricted traffic areas, as well as urgency of structural maintenance and repair. These recommendations are now included in the Tri-Service Airfield Pavement Evaluation manual [9].

REFERENCES

1. MIL-HDBK-1021/4. *Rigid Pavement Design for Airfields*. Military Handbook, Naval Facilities Engineering Command, Washington, DC, April 1987 (last updated August 1992).
2. American Public Works Association. *MicroPAVER Training Manual*. Kansas City, MO, 1999.
3. University of Illinois at Urbana-Champaign, Technical Assistance Center. *PAVER for Windows.* Champaign, Illinois, 1999.
4. Alexander, D. *Nondestructive Procedures for Airfield Pavement Evaluation*. Technical Manual, U.S. Army Corps of Engineers, Waterways Experiment Station, Vicksburg, MS, December 1994 (Draft).

5. Alexander, D. *Layered Elastic Evaluation Program – LEEP. User's Guide*. U.S. Army Corps of Engineers, Waterways Experiment Station, Vicksburg, MS, December 1994 (Draft).

6. International Civil Aviation Organization. *Aerodrome Design Manual, Part 3 – Pavements.* ICAO, Montreal, Quebec, 1983.

7. International Civil Aviation Organization. *Aerodromes – Annex 14 to the Convention on International Civil Aviation, Volume 1.* ICAO, Montreal, Quebec, July 1995.

8. Headquarters, Department of the Army. *Engineering and Design Characteristics for Airfield-Heliport Design and Evaluation*. Engineering Technical Letter ETL 1110-3-394, U.S. Army Corps of Engineers, Washington, DC, 1991.

9. Headquarters, Department of the Army, Air Force and Navy. *Airfield Pavement Evaluation.* Technical Manual, TM 5-826-1/ AFJMAN 32-1036/ DM 21.7, Washington, DC, December 1998.

10. Malvar, L.J. *NDT Evaluation of Airfield Pavements – A Sensitivity Study.* Special Publication SP-2006-SHR, Naval Facilities Engineering Service Center, Port Hueneme, CA, September 1996.

11. Malvar, L.J. *Summary of Completed Action Items Relative to PCN Evaluation and Reporting.* Minutes of the Navy Airfield Pavement Meeting, Naval Facilities Engineering Service Center, Port Hueneme, CA, 30-31 October 1996.

12. Malvar, L.J. *Summary of Completed Action Items Relative to PCN Evaluation and Reporting.* Minutes of the Navy Airfield Pavement Meeting, NFESC, Port Hueneme, CA, 21-22 October 1997.

13. Hironaka, M.C., Kusano, H.M., Malvar, L.J., Schiavino, C.J. *Aircraft Weights for Pavement Evaluations*. Technical Report TR-2096-SHR, Naval Facilities Engineering Service Center, Port Hueneme, CA, February 1999.

14. U.S. Department of Transportation, Federal Aviation Administration. *Standardized Method of Reporting Airport Pavement Strength – PCN.* Advisory Circular 150/5335-5 of 6/15/83.

15. Hironaka, M.C., Kusano, H., Malvar, L.J., Schiavino, C.J. *Navy and Marine Corps Airfield Pavement Condition and Load Carrying Capacity.* Special Publication SP-2048-SHR, Naval Facilities Engineering Service Center, Port Hueneme, CA, February 1999.

16. Hironaka, M.C., Schiavino, C.J., Kusano, H. *CINCPACFLT Prioritized Airfield Pavement Projects FY98-07.* Special Publication SP-2034-SHR, Naval Facilities Engineering Service Center, Port Hueneme, CA, March 1998.

TABLE 1. ACN VALUES FOR 5 AIRCRAFT TYPES AND 3 LOAD CONFIGURATIONS (PEACE TIME)

AIRCRAFT	LOAD	PEACE TIME TAKE OFF WEIGHT (LBS)	RIGID PAVEMENT				FLEXIBLE PAVEMENT			
			A K > 400 (pci) E>57022 (psi)	B K ≤ 400 K > 200 E≤57022 E>23416	C K ≤ 200 K > 100 E≤23416 E>9616	D K ≤ 100 E≤9616	A CBR>13 (%) E>19500 (psi)	B CBR≤13 CBR>8 E≤19500 E>12000	C CBR≤8 CBR>4 E≤12000 E>6000	D CBR≤4 E≤6000
F-14 Tomcat	FULL	72,000	28.7	28.7	28.7	28.7	27.7	27.7	27.7	27.7
	HALF	54,350	21.6	21.6	21.6	21.6	20.9	20.9	20.9	20.9
	EMPTY	36,700	14.5	14.5	14.5	14.5	14.1	14.1	14.1	14.1
P-3 Orion	FULL	135,000	40.3	42.5	44.2	45.1	35.7	38.6	41.8	44.5
	HALF	100,600	28.6	30.3	31.6	32.4	25.4	27.0	29.5	32.2
	EMPTY	66,200	16.9	18.0	19.1	19.7	15.2	15.4	17.1	19.9
C-130 Hercules	FULL	155,000	26.6	29.4	32.1	34.2	24.1	28.1	30.5	35.5
	HALF	113,500	19.1	21.0	22.8	24.2	17.3	20.1	21.7	25.0
	EMPTY	72,000	11.6	12.6	13.4	14.2	10.4	12.1	12.9	14.4
C-141 Starlifter	FULL	325,000	41.5	50.2	58.9	65.4	43.8	50.3	61.5	75.1
	HALF	232,500	27.3	32.6	38.4	43.0	29.2	32.9	39.5	49.3
	EMPTY	140,000	13.0	15.1	17.9	20.6	14.6	15.5	17.5	23.4
C-5A Galaxy	FULL	769,000	25.7	30.5	39.5	48.8	32.6	36.0	44.3	60.5
	HALF	543,500	17.8	20.0	24.6	30.2	21.1	23.1	28.0	37.5
	EMPTY	318,000	9.9	9.9	9.9	11.6	9.6	10.2	11.7	14.6

Notes: 1 N = 0.225 lbf ; 1 MPa = 145 psi ; 1 MN/m^3 = 3.68 pci

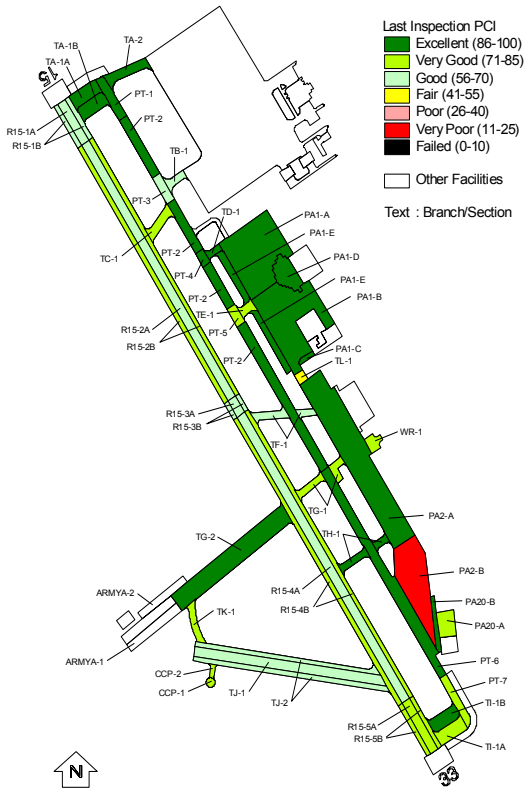

Figure 1. Typical PCI Map.

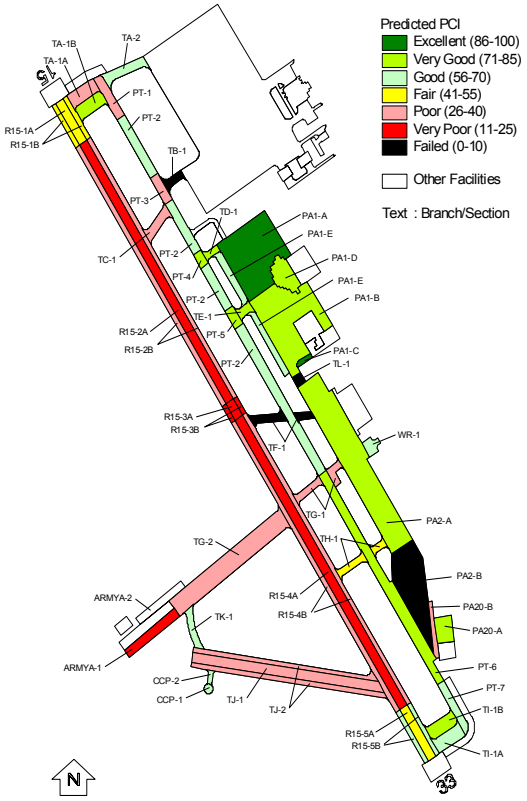

Figure 2. Projected PCI Map.

Figure 3. Heavy Weight Deflectometer (PCN)

Figure 4. HWD sensors (PCN)

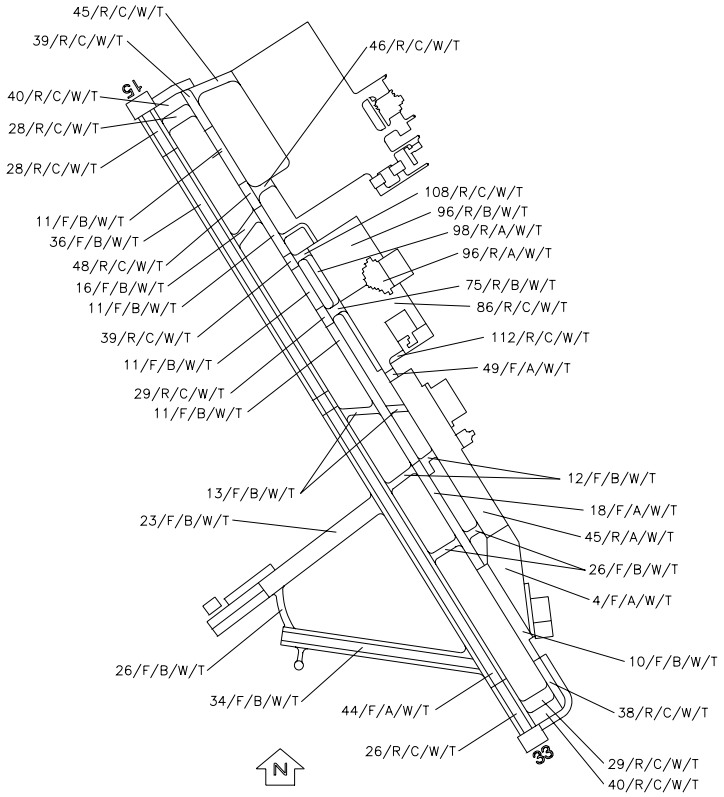

Figure 5. Old PCN Map.

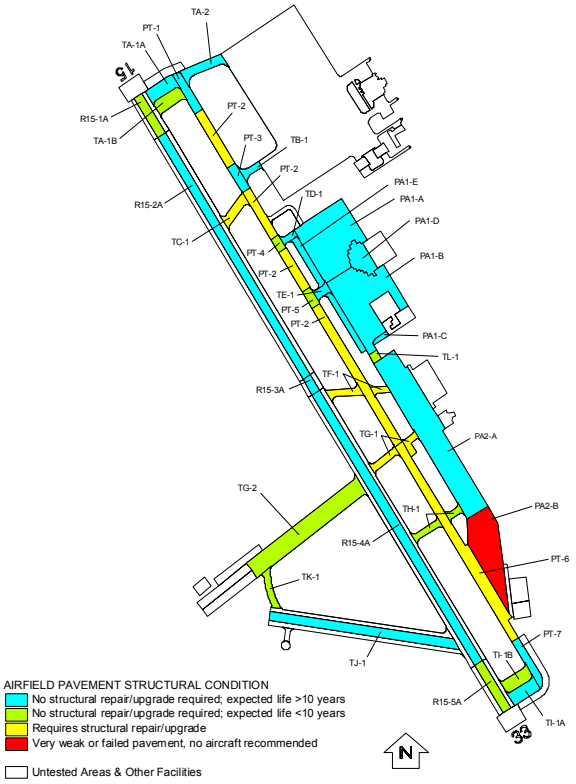

Figure 6. New PCN Map.