NAVAL FACILITIES ENGINEERING SERVICE CENTER
Port Hueneme, California 93043-4370

Technical Memorandum
TM-2208-AMP

CALM WATER TEST OF A CONCEPTUAL FLEXIBLE CONNECTION SYSTEM FOR PONTOON PLATFORMS

by

William G. Hatch
Erick T. Huang
Joseph L. Barthelemy

August 1996

Sponsored by
Office of Naval Research
Arlington, VA 22217-5000

Approved for public release, distribution is unlimited.

Printed on recycled paper

CONTENTS

	Page
INTRODUCTION	1
BACKGROUND	1
TEST PREPARATION	2
Flexible Connector	2
Causeways	2
Deck Modifications	3
Bridle Legs	3
Instrumentation	3
Constant Tension Winch	3
DAY ONE TESTS	3
DAY TWO TESTS	4
DAY THREE TESTS	6
FINDINGS	6
APPENDIXES	
A - Flexible Connector/Marriage Bridal Demonstration Test Plan	A-1
B - Constant Tension Winch	B-1

INTRODUCTION

The ability to move equipment and supplies ashore during littoral engagements is currently a top Navy priority. Maritime assets offshore, including sea-based logistics and supply lighterage, provide the basis for Operational-Maneuver-From-The-Sea (OMFTS) and Logistics-Over-The-Shore (LOTS) types of operations. The need for advanced open sea lighterage platforms to support this mission has been documented in Naval Civil Engineering Laboratory (NCEL) Technical Memorandum TM 60-91-02, "Required Technologies for Amphibious Logistics to Support the Over-the-Horizon Operations Concept." The new concept for ship-to-shore operations requires that modular pontoon assets be delivered by containership to a maritime site where multiple modules are joined on the water to form barges. These barges are subsequently joined into the larger ferries and causeways that are required to sustain the movement of equipment and supplies ashore. The Naval Facilities Engineering Service Center (NFESC) (formerly NCEL) is working to extend the capability of connecting multiple pontoon structures in seaways up to sea state 3. Funding for the improvement of existing technology and advancement of future requirements is provided by the Office of Naval Research under Replenishment Project RM33F61 of the Navy Exploratory Development Program LH2A (Facilities and Material), as well as through the Sealift Support Program directed by the Civil Engineering Support Office (CESO) and the Naval Facilities Engineering Command (NAVFAC).

Concurrent with efforts to upgrade existing amphibious pontoon assets, NFESC is also designing and testing the connectors required to hold the pontoon modules together. The Navy is developing a larger pontoon system that is nominally 25 feet in wide, 40 feet long, 8 feet deep, and weighs 30 long tons. Flexible-type connectors are required to link assembled barges into ferries, causeways, and other floating structures under elevated sea state conditions.

BACKGROUND

During 10 through 14 January 1994, tests were conducted at Naval Amphibious Base (NAB), Coronado, California, to track performance characteristics and establish shortcomings of the existing Flexor marriage bridle system. The technical findings and suggestions from that effort were published in Technical Memorandum TM-2103-AMP, "Flexor Marriage Bridle Tests," published by the NFESC in December 1994. That document provided the guidance and direction for some of the follow-on work completed during the March 1995 sea trials documented herein.

During the last week of March 1995, a series of demonstration tests were conducted by personnel of the Amphibious Construction Battalion ONE (PHIBCB ONE) at the Naval Amphibious Base, Coronado, California. The primary objectives were to: (1) evaluate the performance of new rigging procedures and hardware components that were introduced to improve the utility and safety of the existing marriage bridle system, (2) establish the effectiveness of various techniques in aligning and controlling causeway sections during marriage bridle connections, and (3) demonstrate a prototype flexible connector that retains the

strength of the existing Flexor assembly, but eliminates the need for male and female pipe shear connectors at the end of the causeway section. This test report describes the sequence of trials performed and the results obtained.

Appendix A contains a copy of the Flexible Connector/Marriage Bridle Demonstration Test Plan, the working document prepared for this series of follow-on tests at Coronado. The test plan highlights the hardware modifications, operational procedures, test equipment, and proposed scheduling required during the 3-day test period.

TEST PREPARATION

A number of hardware changes were completed to prepare for the demonstration. They are discussed in the following paragraphs.

Flexible Connector

The most significant change was the fabrication of a prototype flexible connector that is designed to provide a hinge between floating platforms while absorbing all tensile, compressive, and shear forces that occur between the platforms. Figure 1 consists of an assembly drawing of the prototype flexible connector and provides an overview of the connector design. Figure 2 presents views of the prototype connector before and after assembly, demonstrating the simplicity of the components. The forward section of the connector consists of a high strength chain encased in a rubber body. The combination of chain and rubber provides a member that is flexible, resistant to shear, and strong in tension. Flexibility is required because the connector must bend and flex in order to accommodate relative motions between barges as they are brought together for connection. In calm waters, a connector must also be flexible enough to compensate for the differences in trim that result from connecting loaded and unloaded barges. Although the urethane section of the connector assembly does bend, the material is stiff enough to dampen relative motions by absorbing some of the shear forces as the sections are being connected. The internal chain is the connection point for the marriage bridles and withstands tensile forces between barges as they are brought together. Final connection is accomplished with a guillotine lock mechanism (Figure 3) on each barge that secures the steel structures of the connectors within the receivers. The operating geometry of the prototype, including causeway separation and rotation axis, is the same as current Navy Lightered (NL) assets equipped with the P8/Universal End Connector system. The prototype is shown installed and locked between two causeways in Figure 4.

Causeways

Two 3x15 NL causeway sections were modified to accept the prototype connectors, with troughs installed into the deck to facilitate installation, retrieval, and storage of the connectors, as shown in Figure 5. The guillotine locking dimensions of the existing P8 pontoons were retained since the new connectors were fabricated to the control dimensions of the existing Flexor connectors and receivers.

Deck Modifications

The decks of the side-loadable warping tugs (SLWTs) and causeway sections were fitted with PH-11 padeyes and base plates, as shown in Figure 6, to provide improved attachment points for required snatch blocks. The PH-11 design was chosen because of its presence in the NL inventory, size, high load rating, and ability to safely withstand moderate side loads. Figure 7 shows the PH-11 padeye in place on the double angle of the SLWT with sheave and A-wire fairled across the deck.

Bridle Legs

Longer bridle legs were fitted to the new locations of the PH-11 padeyes to assure equipment compatibility. Bridle legs of 50, 65, and 75 feet were provided (the latter two sized with 3/4-inch wire rope instead of the standard 1-inch diameter). The longer bridle legs, used in conjunction with the relocated PH-11 padeyes, allow an additional 15 to 25 feet of separation between the sections during the bridle connection procedure, enhancing the safety of the operation. The 3/4-inch bridle legs are lighter and more flexible than the 1-inch legs and are still within the necessary safety limits.

Instrumentation

Two load cells were installed at the snatch block hard points in order to record the magnitude of applied line loads. The load cells were calibrated in place in order to compensate for the angle of pull. Figure 8 shows one of the load cell and sheave arrangements.

Constant Tension Winch

A pneumatically controlled “air tugger” configured as a constant tension winch (CTW), shown in Figure 9, was modified for use aboard one of the causeway sections. This CTW provided a means of controlling the retrieval of bridle lines during a mating sequence. The advantage of the modified air tugger is that the controls permit operation in either constant tension or normal modes. In constant tension mode, it can greatly reduce the dangers of snap loads by overhauling and paying out line when excessive forces are applied, or continuously taking up slack in the lines when the barges surge together. Basic winch specifications and a performance overview are provided in Appendix B.

DAY ONE TESTS

The morning of the first day was used to expose the PHIBCB ONE crew members to the new connector hardware and marriage techniques. The approach to improved connection procedures using improved marriage bridle hardware was addressed. Two operational characteristics that improve the efficiency and safety of at-sea marriages are: (1) proper alignment of sections prior to mating, and (2) controlled tensioning of bridle lines. Two techniques for aligning and tensioning the bridle rig by controlling the forces between the sections were outlined: (1) with sections under tow, and (2) using tugs operating under opposing

thrust. After the classroom introduction, the crews worked dockside with the new prototype connectors. They practiced moving the flexible connectors between causeway sections and dropping the guillotine stops to assure proper operation of the new hardware. Following the dry runs pier side, two causeway (CW) sections were taken under tow by two SLWTs. The first trials conducted used the under-tow technique as shown in Figure 10. SLWT1 was tied alongside CW1, and CW2 trailed behind CW1 by bridle lines. SLWT1 used its on-board winch to pull the trailing CW2 section forward to mate with CW1. SLWT2 stood by during the sequence of operations.

Several problems were encountered using this method. They are discussed in the following:

1. Under the light tension of low speed tow, the leading end of the connector sagged to near the waterline, as shown in Figure 11. The 56-inch urethane/chain sleeve lacked sufficient rigidity to remain erect and resulted in an unfavorable angle of attack for entry to the mouth of the receiver.

2. Even while under tow, a lack of hydrodynamic stability (evidenced by a continued side-to-side sway of the trailing CW2) resulted in connector misalignment between CW1 and CW2.

3. There was a tendency for the bridle harness to lose tension and relax at the moment that SLWT1 commenced to winch in CW2. The applied winching load caused the low speed SLTW1 to lose headway as the winch was engaged. This gave CW2 a momentary opportunity to overtake CW1 and slack the bridle lines. The sudden loss of tension could result in subsequent snap loads when the sections surge apart. The loss of stabilizing towing drag also aggravated the already discussed tendency for misalignment between sections while under tow.

4. As the leading end of the connector was pulled into the receivers of CW1, the shackle connected to the bridle leg upset and jammed against the mouth of the receiver. Sometimes one connector entered its tunnel and the second did not, resulting in a more pronounced misalignment, even to the point of causing damage to the connector that was engaged.

During these tests, the load cell attached to the shackle recorded forces up to 5 kips in the towing mode, 10 kips while inhauling the winch, and 18 kips in snap loads. An improvement to the rig was made when the shackle connections were removed to avoid the problem of hanging up during entry. The bridle lines were connected directly to the chain connecting links at the end of the urethane guides.

DAY TWO TESTS

Problems with one of the prototype connectors curtailed the morning tests shortly after reaching the operational area. While continuing the under-tow connection technique, one of the connectors from CW2 successfully locked in CW1. The remaining connector disjointed at the steel/urethane interface and could not be pulled into its receiver. The problem was the discontinuity at the interface of the urethane sleeve and steel weldment of the connector body.

The urethane was not bonded to the steel face of the connector and the tension of the chain holding the urethane to the body was insufficient to provide the smooth transition required for connections. Figure 12 shows the discontinuity between the sleeve and weldment as the connector is pulled into the receiving tunnel. With only one connector successfully locked in place, its structural integrity was threatened by the bending and stressing due to relative motions between CW1 and CW2. The craft returned to the dock to extract the connector under more controlled conditions and correct the problem.

Figure 13 shows the rigging configuration used in an alternate method of aligning causeway sections and tensioning the bridle legs. SLWT1 is tied alongside CW1 as shown, and applies power forward. SLWT2 is secured to the stern of CW2 with the A-wire and backs down, countering the force of SLWT1. The opposing thrusts balance one another and maintain a steady tension on the bridle lines. The winch aboard SLWT1 draws the two sections together under the direction of a signalman. In the first trial of this sort, the marriage was completed in less than 2 minutes with no connector or alignment problems. A tension load in the range of 12 to 14 kips was recorded, with a maximum of 18 kips during a surge.

The next tests required a marriage between SLWT2 and the P8/Flexor end of CW2. This was accomplished using the Flexors without the assistance of marriage bridle hardware. SLWT2 moved from alongside CW2 and was repositioned in line with the stern. SLWT1 (through the CW1/CW2 connection) held CW2 in alignment and SLWT2 moved forward to engage the shear connectors of the Universal End Connector System. Five attempts were required for this procedure to work because of the difficulties in maintaining alignment while applying power at the proper time to engage the pipe/socket connectors. Unassisted operations requiring such fine control would be difficult or impossible in an open seaway.

The next series of tests demonstrated more reliable connections of the flexible connectors due to the improved control afforded by the new SLWT positions. SLWT1 was tied alongside CW1 and SLWT2 was connected in line with CW2 (Figure 14). The flexible connection between CW1 and CW2 was separated, but the sections remained linked through the wire marriage bridles. With the trailing causeway section and tug connected in line, there was much less of a weather vane effect than witnessed during the first day when the tug and barge were tied alongside. The increased towing stability resulted in reduced yaw, making it considerably easier to separate the sections without binding.

The same test of joining causeway sections was repeated. SLWT1 was tied alongside CW1 while SLWT2 connected in line with CW2 as Seabee operators observed the effects of the tug placement (shown in Figure 15). Approximately 4 minutes were required to complete a successful connection. Line forces between 6 to 8 kips were measured in the tow line. A third attempt at the same procedure was successful in 3 minutes.

The connected causeway sections were again pulled apart, this time using a procedure of tugs backing off rather than using the towing drag to provide the separation force. The tugs disconnected the sections in approximately 3 minutes with no evident problems. That maneuver completed the morning session of the second day.

The afternoon began with replacement of one load cell which had been producing questionable data. When the tugs and causeways reached the operational area, the barge ferry was reconfigured as shown in Figure 16. Each tug was Flexor connected to the stern of its respective causeway section. Opposing thrust was used to maintain bridle tension during the marriage as the tugs backed apart at engine speeds of 1,000 rpm. During the marriage procedure, the starboard connector became jammed in the receiver. The discontinuity between the urethane

sleeve and the steel weldment caused the top plate of the weldment to cock in the receiver. The resulting misalignment caused the connector to jam and then bend as increased force was applied. The damage (shown in Figure 17) was severe enough to end operations for the day so that the connector plate could be inspected and repaired. The chain inside the urethane sleeve was removed and inspected for signs of distortion. All repairs were made before the next morning, and the connector was reassembled and installed in the causeway.

With only one day of allotted time left for testing, a decision was made that the remaining time would best be used to continue defining the operational characteristics of the prototype connectors rather than begin a new series of tests that could not be completed. Because of this shortage of operational time with the SLWT crews and causeways, the constant tension winch portions of the test were postponed. The winch and compressor were removed from the test sections before concluding the connector tests because the weight and position of the winch and air compressor caused an unfavorable trim on the causeway. This trim adversely affected the flexible connector marriage procedures by binding the urethane end inside the receiver.

DAY THREE TESTS

Although the flexible connectors were repaired and operational, the morning of the third day was lost while the crew repaired the winch aboard one of the warping tugs. Before that series was started, one more unassisted marriage of SLWT to causeway was made. More than 20 minutes were required for the operators of the tugs to successfully make the connection. This marriage attempt suffered from the continuing problems of improper connector alignment and poor vessel maneuverability.

With both SLWTs end connected to a causeway section, the afternoon was used to complete a series of in-line connection tests at varying engine rpm levels. In the configuration shown in Figure 15, both SLWTs were able to back down and exert pretension on the bridles while retaining some degree of maneuverability. The first of the series of back-down trials was begun with causeway separation of 60 feet and SLWT engine speeds of 750 rpm. Under these conditions, the flexible connectors sagged, with the urethane sleeve submerging. Despite the sag, it took approximately 2 minutes to winch in the bridle and complete the connection. At an engine speed of 1,000 rpm, there was little sag of the connector, although there was an unsteady oscillation up and down as the sections were drawn together. Again the connection proceeded smoothly and required only 2 minutes to complete.

Two attempts were made at 1,200 rpm, three attempts at 1,500 rpm, and additional attempts at 1,700 and 1,800 rpm, all with satisfactory results. The observation was made that with increased thrust and greater resultant line tension, the prototype flexible connector appeared stiffer and the entire connector/bridle arrangement was inherently self-aligning. During one of the 1,700-rpm tests, a Coxswain error created a 2-foot lateral offset between sections as the connectors were entering the receivers. The result of continued SLWT thrust against the bridle/connector was sufficient to pull the units back into alignment for final connection.

FINDINGS

1. Flexible connection marriages made by towing the causeway string required a minimum of 10 minutes to complete. It was determined that making barge connections during low-speed tow is not a reliable method of connection. It was not possible to maintain the towed section in steady alignment because of the effects of sway induced by hydrodynamic instability and the alternating tension on the two bridle legs. Further, the loss of towing speed caused by deceleration during winching increased the danger of snap loads. The most significant factor responsible for problems and delays was the excessive sway and yaw of the trailing section. These motions were induced by fluid resistance and alternate tensioning of the bridle legs. Increasing the speed of the tow did little to improve alignment. As the SLWT winch was engaged to inhaul the trailing section, the SLWT was slowed momentarily in response to the increased tension in the bridle legs. This hesitation, coupled with the forward momentum and winch-induced forward surge, caused the bridles to slacken, the connectors to drop, and the misalignment to become more pronounced. Operationally, conducting marriages by towing into a seaway would result in the craft spending inordinate amounts of time steaming out of and back into the operational area.

2. Flexor/P8 marriages conducted without external control are difficult to complete in any waterway. During unassisted marriages, the Coxswain of the SLWT is the individual who exerts that motion control, and his performance is the result of a combination of skill, anticipation, coordination, hand signals, time, and luck. These unassisted marriages in calm water (sea state 1) required an average of 30 minutes to complete, and would be much more difficult in open seaways. Measured tests that have been conducted in the past few years confirm that the speed and safety of a causeway connection is in direct proportion to the measure of control that can be applied to the movement of the sections being connected.

3. The use of a marriage bridle rig and tensioning of the bridle legs by applying a separation force to the causeways has proven to be the best method of completing flexible connections. The SLWTs have sufficient power to pretension the sections while maintaining maneuverability and control. When the pretension is insufficient, the marriage bridle and connectors can sag so that the control and alignment are lost. At medium to high levels of pretension, the bridles and connectors appear more rigid and in line with the level of the receivers, making connections much easier. In shallow water, pretension may be developed by pulling against a single point moor, another tug, or a stern anchor. The existing marriage bridle rigs do require the installation, connection, and rigging of wire and blocks that are cumbersome and difficult to transfer from section to section. This problem can be decreased by using hardware that is smaller, lighter, pre-installed, or integral with the causeway. The use of “Y” bridles on the deck remains a problem as shown in Figure 18. Members of the crew must use pry bars to lever the wire up and over the heads of the assembly bolts as the bridle rig moves down the causeway. The bridle legs sometime snag under an uncomfortably high load, creating a potential hazard.

4. The tests demonstrated that causeway sections can be married using the prototype flexible connector in conjunction with existing marriage bridle hardware. Connections completed during the tests were made rapidly with a high rate of success. The actual connection process

required a much lower crew participation, especially actions involving operations near the ends of the sections. During the trials, the connectors accommodated varying degrees of misalignment between the sections. This capability is a strong indication of the systems' potential for successful operations when sea state conditions may create substantial misalignment between the sections.

5. The prototype flexible connector shows much promise in being able to reliably join two or more floating platforms, accommodate connections in an open seaway, and eliminate the requirement for aligning close tolerance shear connectors at sea. It also holds the promise of reduced costs due to a simplified design.

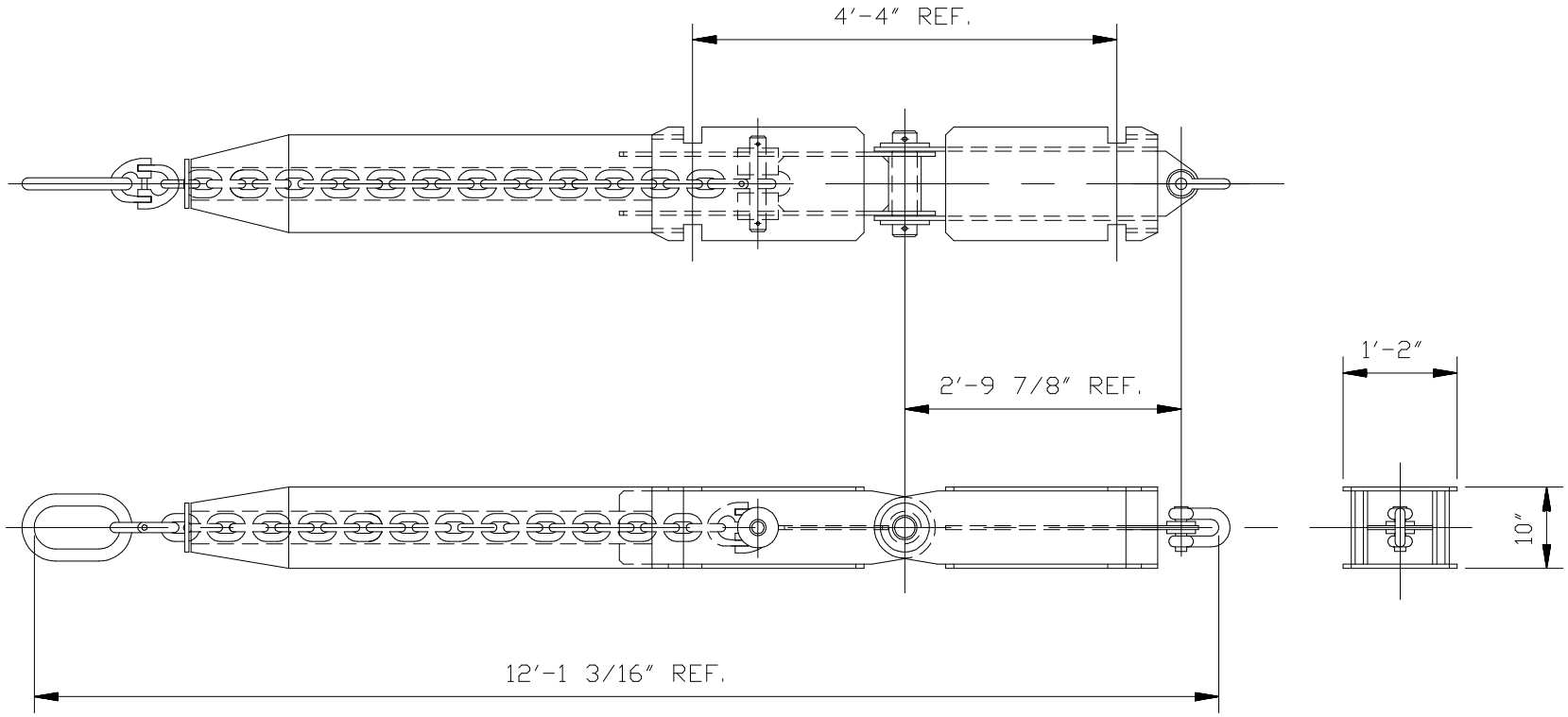

Figure 1
Assembly of a prototype flexible barge connector.

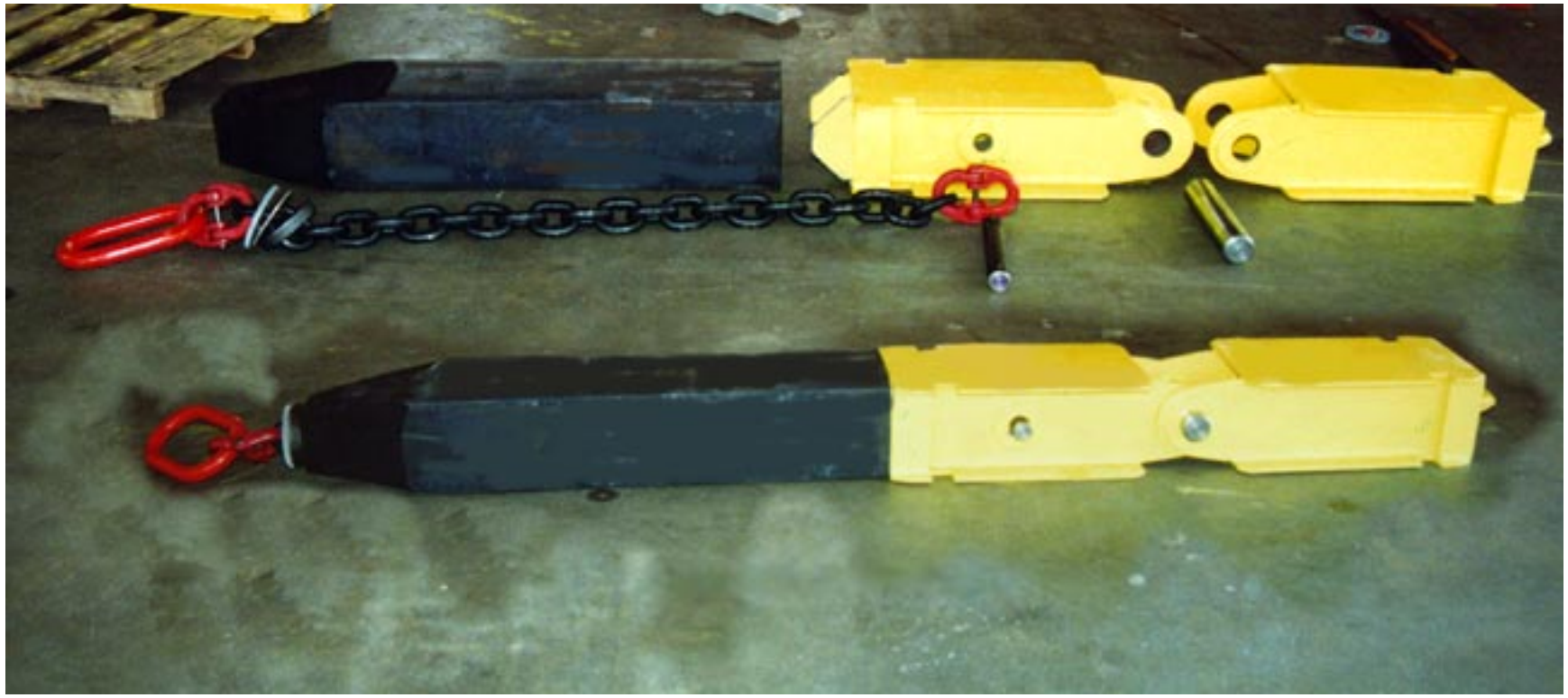

Figure 2
Prototype flexible connectors as fabricated, showing components and assembly.

Figure 3
Flexible connector with locking guillotines in place.

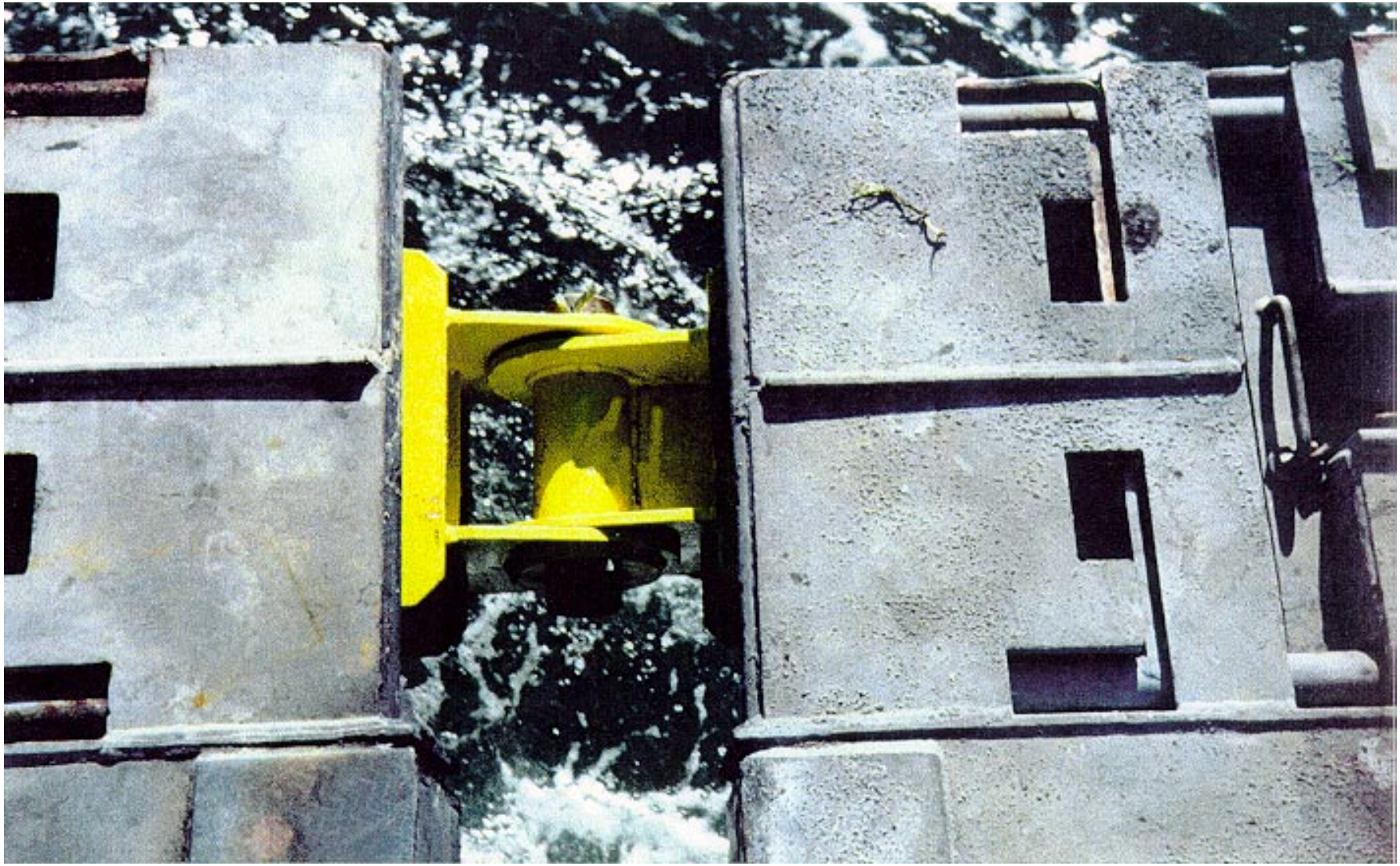

Figure 4
Flexible connector locked in place between two NL causeways.

Figure 5
Modified NL causeway showing connector troughs on deck and “clean end.”

Figure 6
PH-11 padeye mounted on NL causeway deck.

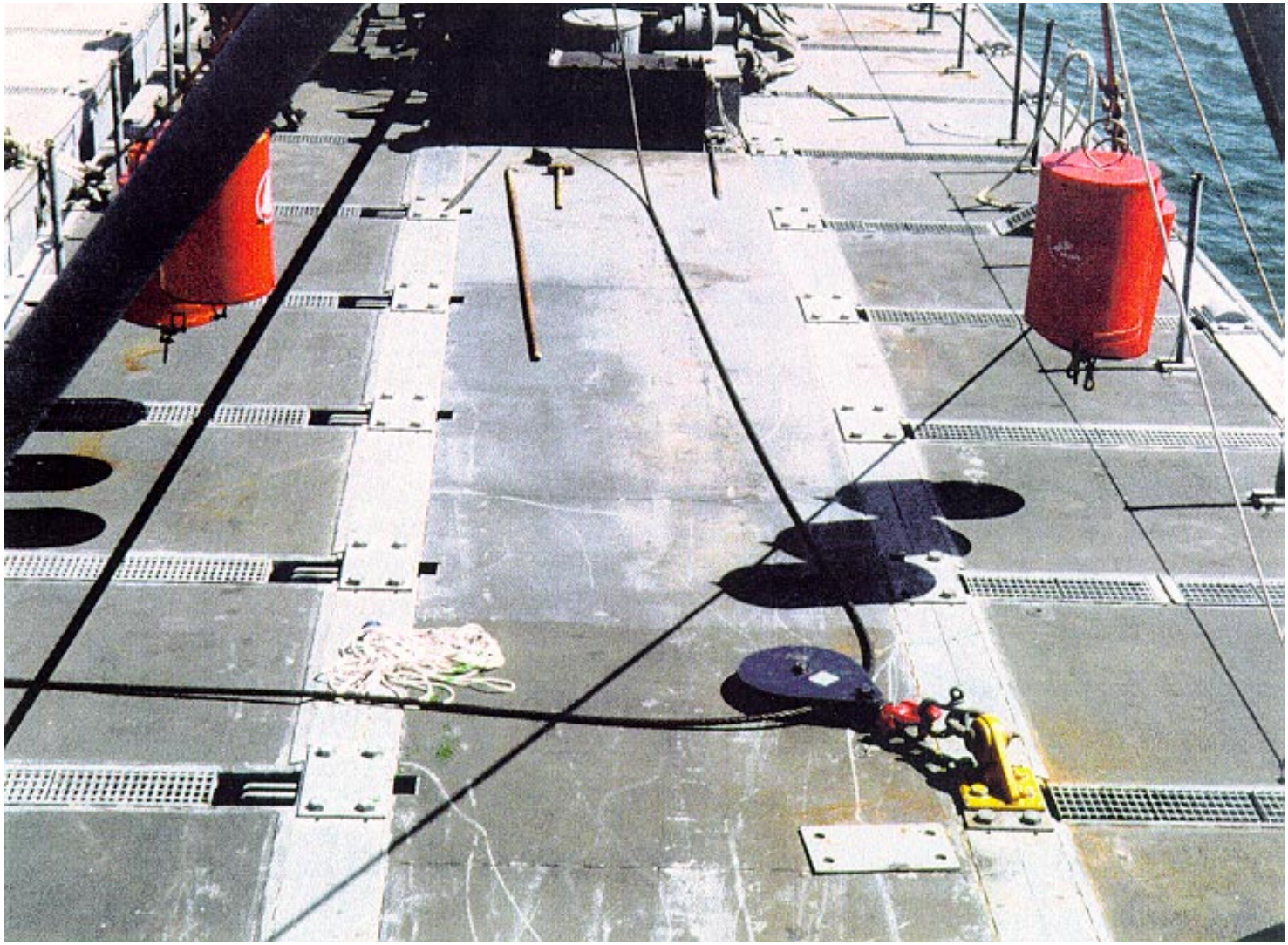

Figure 7
PH-11 padeye mounted on SLWT. The A-wire is rigged for marriage bridle operations.

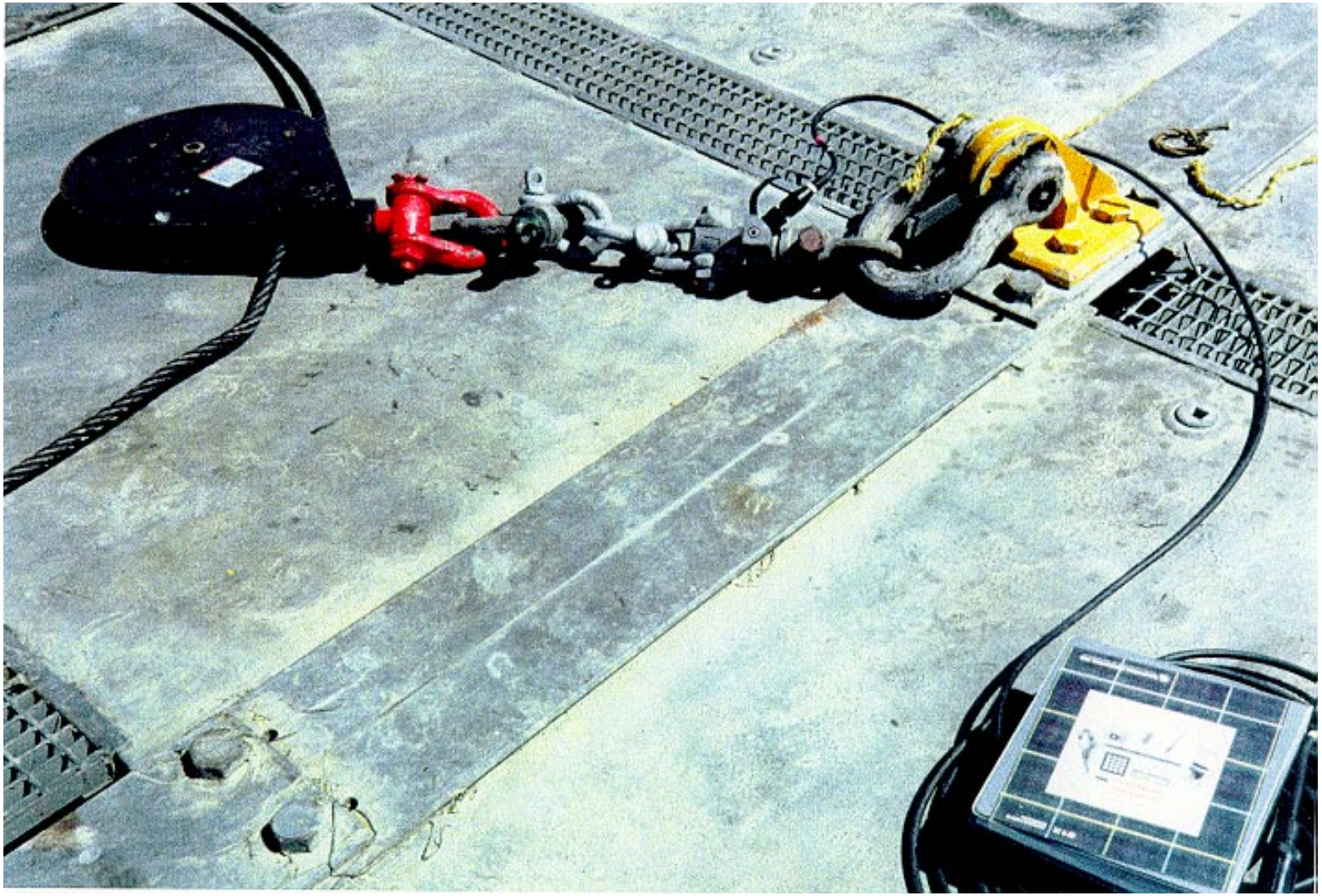

Figure 8
PH-11 padeye on causeway deck with a load cell to measure marriage bridle forces.

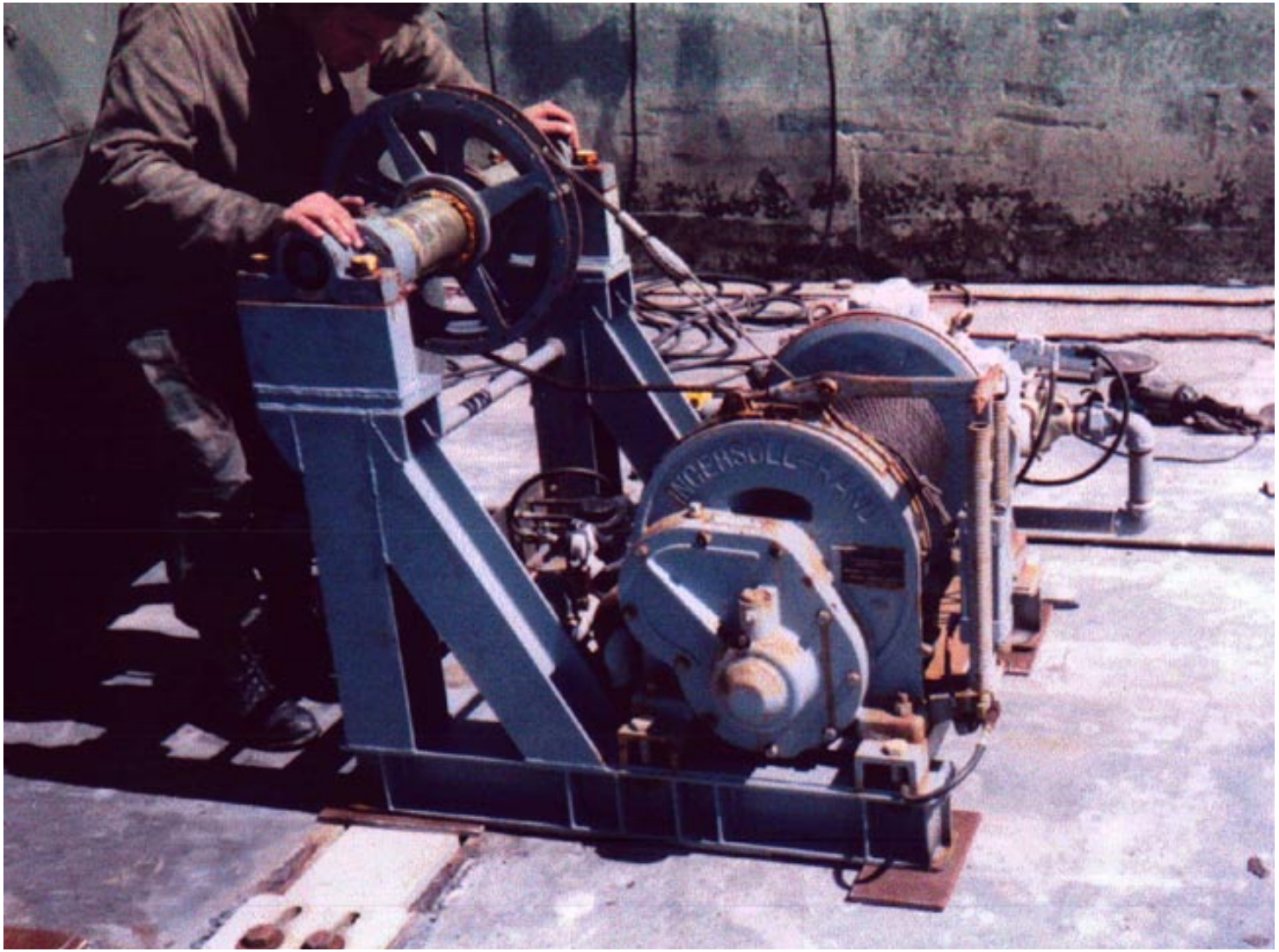

Figure 9
Constant tension air winch being mounted to a removable load beam in a causeway.

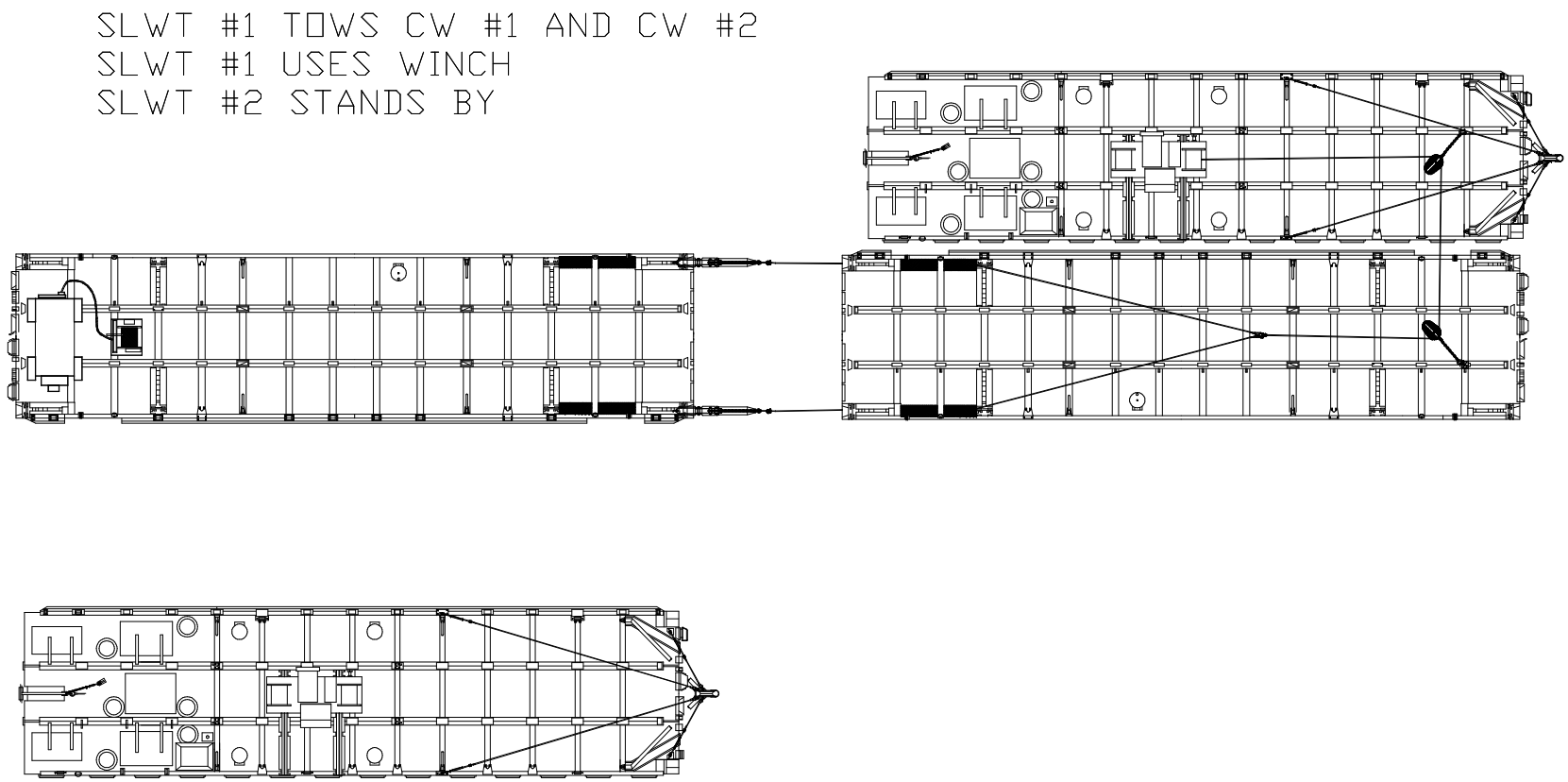

Figure 10
Connecting two causeways by using marriage bridles with the towing method.

Figure 11
The flexible connectors tend to droop when the trailing causeway overtakes the bow.

Figure 12
The steel/rubber transition of the connector caught on the mouth of the receiver.

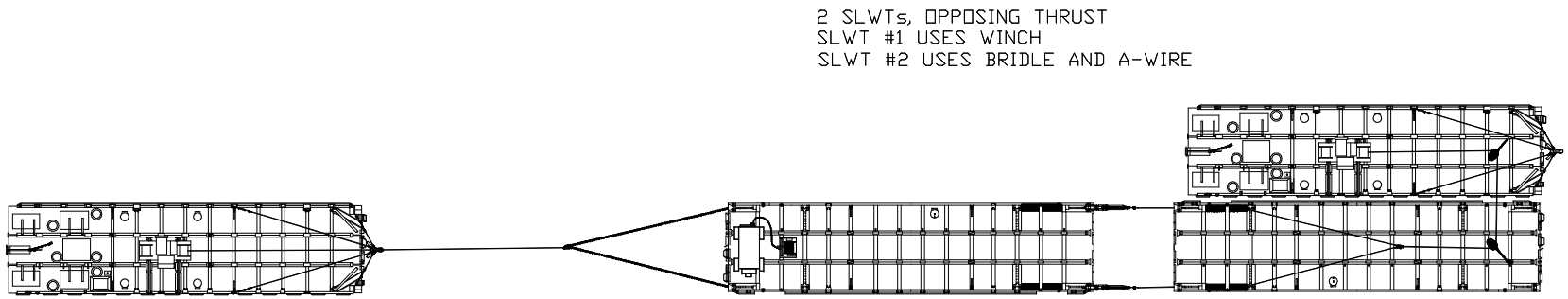

Figure 13
A marriage bridle connection using resistance against the trailing section.

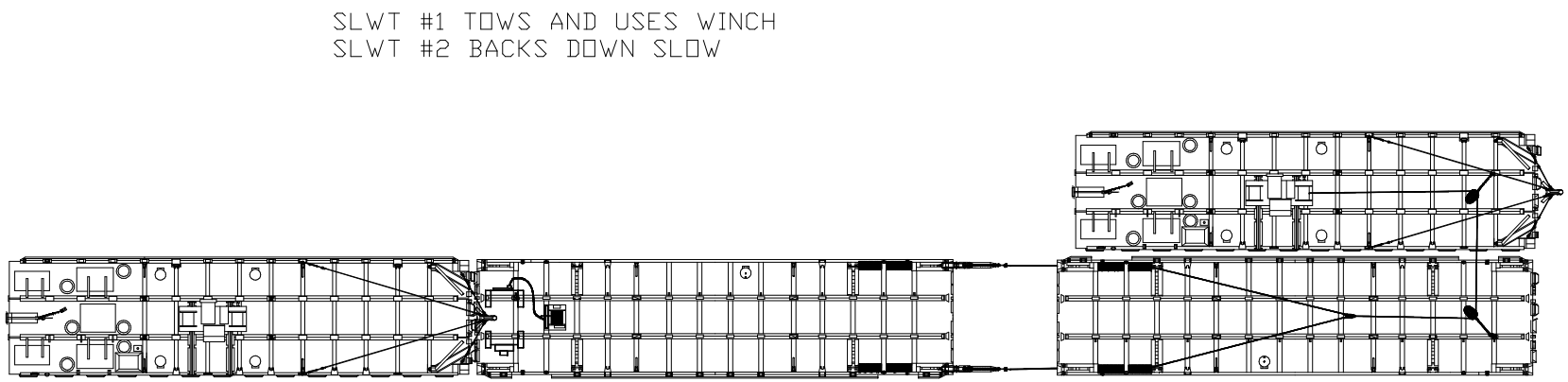

Figure 14
A marriage bridle connection that affords maximum control of the causeways.

Figure 15
Causeway with SLWT in-line, being pulled with marriage bridles.

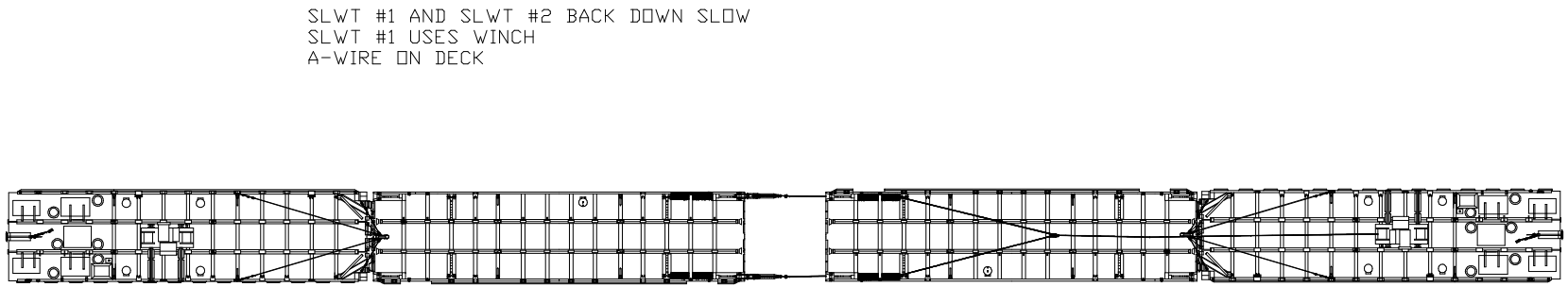

Figure 16
SLWTs with causeway sections in-line allows maximum separation force.

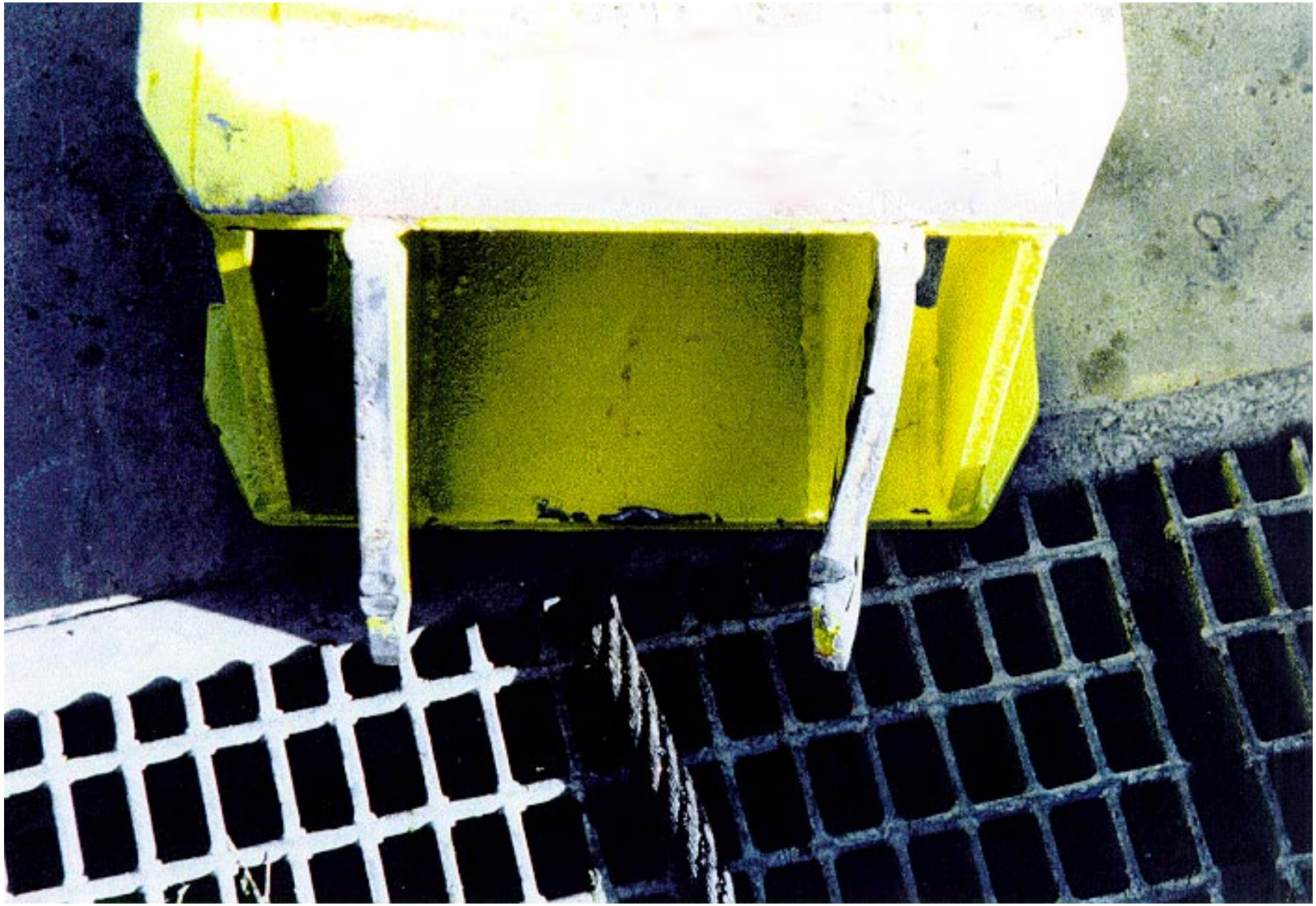

Figure 17
The connector plates were bent during one of the connection operations.

Figure 18
The “Y” configuration of the bridle legs catches on the assembly bolt heads.

Appendix A

FLEXIBLE CONNECTOR/ MARRIAGE BRIDAL DEMONSTRATION TEST PLAN AMPHIBIOUS CONSTRUCTION BATTALION ONE CORONADO NAVAL AMPHIBIOUS BASE 27-29 March, 1995

A series of operations has been coordinated with PHIBCB ONE to test prototypes of the next generation of causeway connectors. The tests will also be a follow-on to tests conducted last year that were used to identify hardware and equipment weaknesses in the Flexor marriage bridal system. This effort will be a demonstration of a concept that retains the strength and desirability of the current Flexor connectors, while eliminating the need for the pipe shear connectors of the Universal End Connector System.

APPROACH

The test report from the marriage bridle trials conducted last year resulted in a number of suggestions for subsequent testing. These are being used as the focus of the current tests, and are described as follows:

1. Modify the deck of the SLWT to accept a padeye on a PH-11 type of base plate. The padeye should be capable of securing two snatch blocks under the full load of the winch (20,000 pounds). Modify a pontoon haulback ring to use instead of a PH-11 if the allowable loads permit. The haulback ring is more easily stowed, can be dedicated to the marriage bridle rig, and would prevent misuse of the PH-11.

The PH-11 padeye will be used on the SLWT to provide a better attachment point for the snatch blocks. The standard 1H1 haulback ring proved to lack the strength necessary for all deck operations and is not included in these tests. A higher strength haulback ring has been designed, but has not been built.

2. Modify the deck of one causeway to accept PH-11 or haulback ring padeyes at the first gap inboard of the P8 pontoons. Each padeye needs to be able to resist the load of the winch and the surge load of the sections. The placement at the ends of the sections could be marked to prevent confusion with the location of the PH-11s for loading aboard the Maritime Prepositioning Force (MPF) ships.

A PH-11 padeye will be used on the deck of a causeway section in the prescribed position. This will be the attachment point for the A-wire sheave on the causeway.

3. Use longer bridle legs in conjunction with the new padeye locations on the deck of the causeways. If the padeyes are mounted at the extreme ends of the causeways, the bridle legs could be lengthened by at least 15 feet.

Bridle legs of 50-, 65-, and 75-foot lengths will be tested for compatibility with the existing marriage equipment in order to improve safety during the connection process.

4. Obtain smaller, lighter weight snatch blocks for use with the marriage bridles. Dedicated blocks with a smaller diameter sheave (grooved for 1-inch wire) would be much more manageable during transfer operations and could be stowed below deck on the SLWT.

The smaller blocks will be used during the next phase of testing.

5. Consider using 7/8- or 3/4-inch bridles if the reduced size makes a significant difference in the size of the snatch blocks and rigging hardware. The size of the legs is a major factor in the selection of the associated hardware. If the wear factors can be controlled, a smaller diameter wire could provide the necessary SWL for the operation while reducing the weight and bulk of the gear.

The 65- and 75-foot bridles used in these tests are 3/4-inch size.

6. Fabricate a 48-inch urethane-encapsulated chain link between the Flexor and the bridle. This 4-foot transitional piece allows the personnel aboard CW2 to stay safely on deck while connecting the bridle legs and could be designed to facilitate the inhaul procedure by providing a smoother transition and reducing the wear on the wire end connection.

The 56-inch urethane end on the prototype connectors is designed to act as a transitional member between the wire bridle and the steel body of the connector.

7. Install a mooring to use as a securing point for sections to be connected. Secure the single sections to it at their stern and pull against it. Design and fabricate chain plate guillotines to secure the mooring to the section. Rather than an installed mooring, one SLWT could anchor with its stern wire and serve as a raft for the sections not being used. This would enable it to pass a line from its bow to the stern of the section to be married and restrain it.

An SLWT will be used as a "live" anchor attached to the stern of a causeway, rather than a fixed mooring. The SLWT will sometimes be attached to the causeway with 1-1/4-inch chain that is locked into chain plates in the Flexor guillotine positions.

8. Instrument the padeyes to determine the loads that are actually seen at these locations. The results would be used to establish SWL requirements for all of the rigging gear.

Two load cells will be used to monitor and record the loads at the sheave attachment points as well as the A-wire/bridle leg junction.

9. Investigate the possibility of obtaining a constant tension device to control the surge motion between the barges during a marriage. Would control of the A-wire be better than individual control over each bridle leg?

A modified "Air Tugger" pneumatic winch will be used to control the inhaul of the sections during part of the test sequence. The controls for the winch permit operation in either constant tension or normal modes. Both are dependent on air pressure for changing the maximum line speed and pull capacity.

10. Fabricate a guillotine mounted roller fairlead to use with a P8 pontoon. This would permit the placement of the padeye attachment points at the extreme ends of the sections and would provide a fairlead that could pass shackles.

This design proved to be too complicated for adaptation to existing NL assets.

11. Operate the marriage bridle with the SLWT end connected to the string. This method would be especially suitable for forming causeway ferries.

This configuration is to be tested in both the SLWT winch and constant tension winch modes.

12. Configure the bridle system so that the bridle legs run from the SLWT to the outboard angles and run straight down the length of the CW1 section. The legs would be fairled through the P8 receivers and across to the Flexors of CW2. CW2 would be outfitted with two 90-foot bridle extensions that would enable the marriage of CW3 with a minimum of equipment transfer. This method would permit the deck loading of causeways prior to end connection and would eliminate the fouling of bridle legs on the assembly bolt heads.

This method will be tried during the next phase of testing.

OPERATIONAL PROCEDURES

During this demonstration, all procedures will follow or be derived from the guidelines set forth in the PHIBCB ONE Operations Manual.

The senior Petty Officer in charge of the deck operations will have ultimate authority on any decisions regarding changes to the equipment or configurations.

At no time will any operation be conducted at the expense of personnel safety.

NFESC personnel will perform in the role of observers and will coordinate any on-site changes through the officer of the deck. NFESC personnel will provide their own safety gear including hard hats, safety shoes, and flotation vests or jackets. They will provide all of their own test equipment including radios, wave monitoring equipment, and cameras.

TEST EQUIPMENT

The basic hardware requirements are:

- 2 each SLWTs with crew
- 2 each modified causeway sections, one an ELCAS roadway section and the other a standard intermediate with P-9 cans.
- 4 each 18-inch snatch blocks with connecting hardware
- A pair of 55-foot long 1-inch wire bridle legs with soft eyes
- 2 each messenger lines
- 4 each 5- to 6-foot pry bars
- 1 air compressor

NFESC personnel will provide the additional equipment and hardware.

A full inventory of all equipment used will be taken and used to formulate a recommended equipment list.

SCHEDULE

The entire demonstration should take no more than 12 to 15 hours (2 days) of operating time, but the operations will be at the mercy of the weather. Ideally, a preliminary day will be spent in assuring that the equipment is properly staged and the sequence of events will be discussed with all parties. Once initial preparations have been completed, the goals are:

DAY ONE

Phase 1 - SLWT with one CW in tow will proceed to an operational site in the vicinity of NAB. SLWT 2 will follow with one CW in tow. The sections will be rigged according to the attached diagrams for operation with the SLWT winch. Minor adjustments in the rig may be made, but the craft positioning and basic layout should remain the same.

Additional configurations may be tried if time and conditions permit.

DAY TWO

Operations will proceed with the emphasis on the use of the constant tension winch to pull the sections together. The general configurations of day one will be repeated with six basic variations to be attempted. Repetitions of any or all variations will be possible, depending on the success of the initial attempts.

DAY THREE

The last day of testing will focus on the action of the connectors when connected between the two causeways. After conducting turning and maneuvering trials in calm water, SLWTs will proceed with the sections to progressively rougher water toward the Bay entrance. The action and response of the connectors and sections will be observed while turning and maneuvering movements are conducted.

Appendix B

CONSTANT TENSION WINCH

An Ingersol-Rand model K5UL air winch was used for this application because of its inherent low maintenance, high reliability, and constant tension capability. Performance characteristics of the unmodified K5UL winch are as follows:

Rated air pressure ..... 90 psi
Rated line pull ..... 5,000 lb @ half drum layer
Rated torque ..... 2,870 lbf-ft
Line speed at rated load ..... 115 ft/min
Number of cylinders 5
Gear ratio 15.6:1

Modifications to the basic winch intended to enhance the control and constant tension performance include: (1) a pneumatic-release/spring-set band brake with a manual brake release, (2) an air lubricator mounted at the winch intake supply port, and (3) a Lebus Fleet Angle Compensator mounted on the frame to allow uniform spooling of the wire. Winch air pressure and line tension are proportionally controlled with a pilot-operated high volume booster relay. The winch, Lebus Spooling Device, and air lubricator are mounted on the winch frame. The winch frame unit is bolted to a load beam that has been designed and used for various applications that apply a deck level load along the length of an NL causeway. The winch frame/load beam assembly simply replaces one of the DC6 deck closure plates, and can be removed quickly.

PRELIMINARY CTW TESTS

A preliminary series of tests was conducted on the CTW to verify the winch characteristics of tension holding, breakout load/air pressure, and overhaul ability. The results showed that the CTW had adequate tension capability for the causeway/bridle tests, with a bare drum pull approaching 10,000 pounds. Figure B-1 shows the CTW characteristics of load and air pressure through a series of overhaul and breakout cycles.

The pressure curve shows that the system pressure started at 20 psi and was raised in 10-psi increments. The lower curve of resultant load shows a flat response to the applied air pressure, and then spikes when an external overhaul load is applied. The ensuing fluctuations in the load are a function of the movement of the applied load (a front end loader backing down slowly) and the internal resistance of the air motor. The breakout reactions of the winch to a slowly applied load are not necessarily representative of the loads that are anticipated during a barge marriage operation. The more dynamic loads will tend to reduce the initial spike as the internal resistance is overcome, but the higher outhaul resistance will remain.

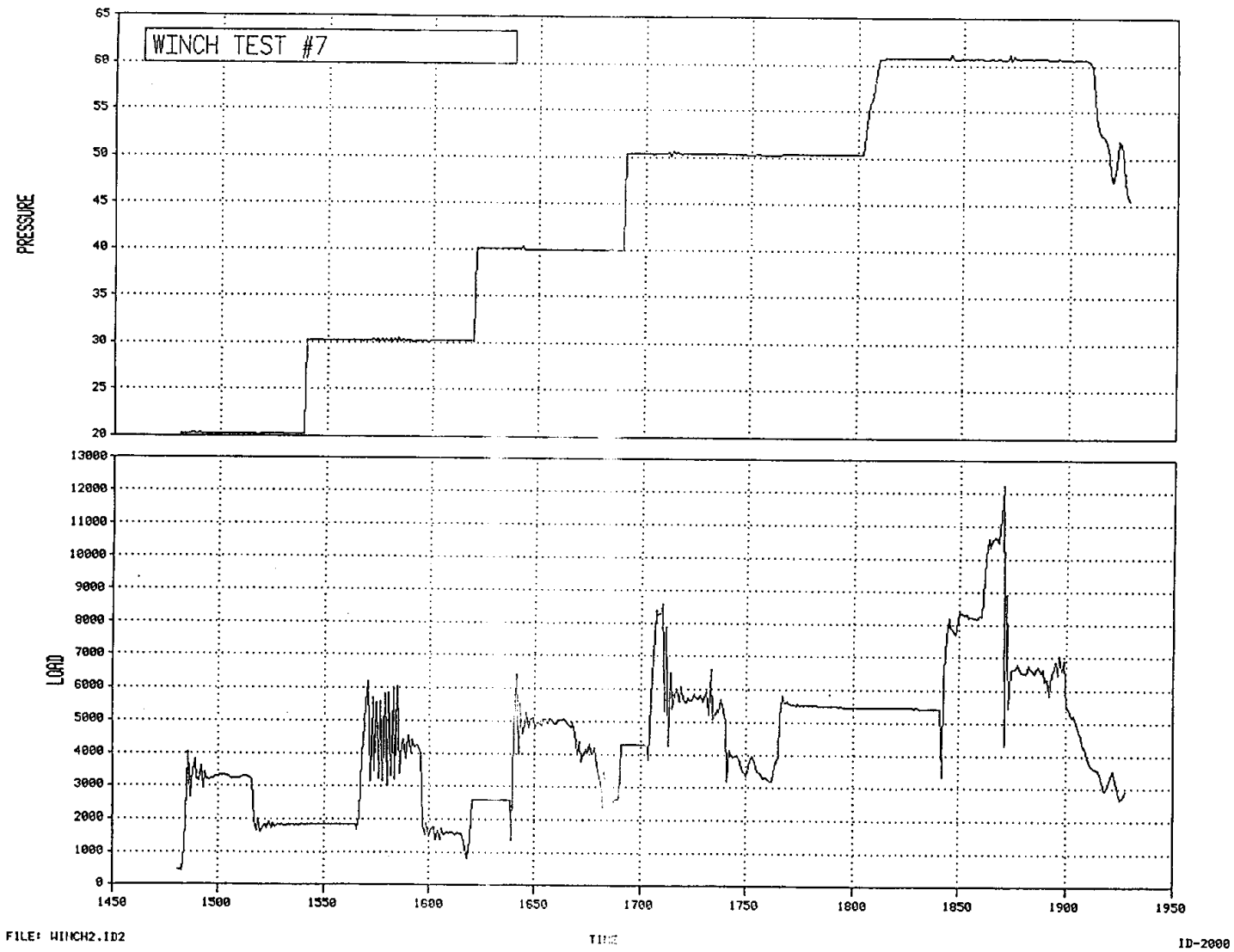

Figure B-1
Constant tension air winch static and overhaul loads at 10-psi increments.