NAVAL FACILITIES ENGINEERING SERVICE CENTER
Port Hueneme, California 93043-4328

Technical Memorandum
TM-2067-AMP

CONCEPTUAL DEVELOPMENT OF OPEN SEA MODULE CONNECTION TECHNIQUES

by

Erick T. Huang, PhD

March 1995

Sponsored by:

Office of Naval Research
Arlington, VA 22217-5660

Program No.: RM33U62

Approved for public release, distribution is unlimited.

ADMINISTRATIVE INFORMATION

The Naval Facilities Engineering Service Center (NFESC) has been tasked to provide modular construction techniques for global amphibious applications. An immediate goal is to develop a general method for assembling floating platforms, with that effort feeding the longer term objective of implementing a universal open sea construction technology for the Navy's modular pontoon-based assets. This effort is funded by the Office of Naval Research (ONR) as Task C-8: *Advanced Module Construction Technology* under the Replenishment Section (RM33U62) of the Navy Exploratory Development Technology Program LH2A - Facilities and Material.

FOREWORD

For decades, the Department of Defense (DOD) has funded the development of methods to effectively discharge military cargo during amphibious missions. Floating pontoon sections and various pontoon assemblies are assets that are used extensively during amphibious operations as interface structures between the sealift force and the undeveloped beach. However, the relatively large size of pontoon hardware and the limited open sea assembly capability present formidable logistic burdens to the Navy's sealift forces. These drawbacks may impair the military's ability to respond rapidly in these times of sudden and widespread regional flareup. As a result, if these deficiencies were to go unchecked, it would be necessary to preposition more equipment at many more forward sites around the world, implying significant increases in operational costs as well. Forward thinkers have directed the DOD toward modularization of components, enabling rapid ocean transport by widely available commercial containerships. A joint Navy/Army program established in the mid-1980s to assess commercial pontoons that could be configured to International Standards Organization (ISO) size has resulted in the evolution of the Army's Modular Causeway System (MCS), with the Navy's high sea state pontoon development a legitimate extension of the MCS concept. Regardless of the exact method of modularization, however, a critical premise to the success of this new concept is a reliable construction technology to assemble large numbers of pontoon modules configured for effective joining in an open seaway. JLOTS III confirmed that conventional techniques of assembly are demanding in terms of time, labor, and required equipment support. In order to make open sea connections within the emerging modular pontoons efficient as well as feasible in high sea states, innovative construction and joining technologies are essential.

ABSTRACT

This report documents the results of the first phase of development of open sea modular construction technology. The goal of this project is to develop safe and reliable techniques for assembling barges from standard pontoon modules in open sea environments. Existing connection methods have proven to be inadequate in rough seas, as established by a thorough assessment of existing methods used within both the commercial and military sectors. Innovative technology is essential if a new pontoon system with rapid deployment capability is to be realized. The effort of the first phase is therefore devoted to generating and assessing new concepts. An innovative concept with promising potential is recommended for further development. The theoretical rationale, technological data base, performance criteria, and engineering justification in support of this selection are discussed in detail. Recommendations and plans for future development are presented as well.

CONTENTS

		Page
Chapter 1	INTRODUCTION	1-1
	1.1 Objective	1-1
	1.2 Problem Definition	1-1
	1.3 Technical Background	1-2
	1.4 Methodology	1-2
	1.5 Scope	1-3
Chapter 2	REQUIREMENTS SPECIFICATION	2-1
Chapter 3	TECHNOLOGY ASSESSMENT	3-1
	3.1 Patent Search	3-1
	3.2 Other Commercial Connection Systems	3-9
	3.3 Military Practice	3-13
	3.3.1 Rigid Connection	3-13
	3.3.2 Flexible Connection	3-14
	3.4 Summary of the Technology Status	3-16
Chapter 4	TECHNICAL APPROACH	4-1
Chapter 5	HYDORDYNAMIC CHARACTERISTICS OF PONTOON MODULES IN SEAWAYS	5-1
	5.1 Introduction	5-1
	5.2 Scenario	5-1
	5.2.1 Relative Motion	5-2
	5.2.2 Loads	5-2
	5.2.3 Tension on Warping Lines	5-3
	5.2.4 Summary of Motion and Load Analysis	5-4
Chapter 6	ALTERNATIVE GENERATION	6-1
	6.1 Primitive Concepts	6-1
	6.1.1 Current Systems	6-1
	6.1.2 In-House Brainstorming Session	6-1
	6.1.3 Contractor Concepts	6-3
	6.1.4 Lessons Learned	6-8
	6.2 Concept Formulation	6-9
	6.2.1 Guidelines	6-9
	6.2.2 Connection Procedure	6-9
	6.2.3 Structural Features	6-11

Page

6.3 Evaluation of the Alternatives 6-23
6.3.1 Criteria for Concept Selection 6-23
6.3.2 Concept Scoring 6-23
6.3.3 Results of Evaluation 6-24
6.4 Recommended Concept 6-26
6.4.1 Connection Procedure 6-27
6.4.2 Rigid Connectors 6-27
6.4.3 Flexible Connectors 6-32
6.4.4 Issues 6-33

Chapter 7 AT-SEA TESTS 7-1

7.1 Test Procedure 7-1
7.1.1 Phase One 7-1
7.1.2 Phase Two 7-2
7.1.3 Out-of-Trim Sections 7-3
7.2 Findings 7-3
7.3 Plans for Follow-On Tests 7-5

Chapter 8 CONCLUSIONS 8-1

REFERENCES R-1

Appendixes

A - The Universal End Connector System for NL Pontoon Barges A-1
B - Hydrodynamic Analysis B-1
C - Results of Brainstorming Session on Open Sea Module Connection Technology C-1
D - Primitive Concepts by FBM Inc. in Response to FY93 BAA Contract D-1

CHAPTER 1

INTRODUCTION

1.1 OBJECTIVE

The objective of this project is to provide improved technology for open sea assembly of ocean facilities from individual pontoon modules. This technology is critical to the development of high sea state pontoon systems that can be safely and rapidly deployed with reliable transportation. The technical issues to be addressed are as follows:

a. Extend the capability of connecting existing and future pontoon modules, e.g., expeditionary pier sections and causeway ferries, from sea state 1 to sea state 3. Reduce the manpower and time required to perform the connection by 50 percent. Improve the service life of the connection systems.

b. Provide the capability for on-site construction of pontoon facilities through sea state 3 without creating infeasible logistic burdens. Large pontoon facilities may then be shipped in large components. This capability makes quick deployment of large pontoon facilities possible. The mobility of pontoon facilities will be increased by an order of magnitude.

c. Enhance the weather window for sealift support operations.

d. Provide a data base for the future development of a high sea state pontoon system.

1.2 PROBLEM DEFINITION

An amphibious operation is an attack launched from the sea involving a landing on a hostile shore and follow-on logistics. Typical follow-on logistics require rapid movement of a large volume of ammunition, supplies, and equipment to shore to support the landing forces in the amphibious object area (AOA). For more than 50 years, the U.S. Navy has utilized various causeways, lighterage, and platforms assembled from Navy lighterage (NL) pontoons to accomplish this logistics-over-the-shore (LOTS) mission. These facilities provide the essential working platforms and lighterage capabilities to accommodate sealift forces where port facilities are not available. Previous experience indicates that these facilities, in fully assembled configuration, are difficult to transport. The mobility can be greatly improved if the facilities can be transported in components. NL causeway ferries and Roll-On/Roll-Off (RO/RO) platforms use this concept, for which the basic building blocks are NL pontoon causeways. At present, these causeways have to be fabricated on land and can only be transported as a unit by a limited number of dedicated vessels. The same concept of modularization may be extended to the fabrication of causeways from pontoon modules suitable for rapid transport by containerships. This concept, however, relies entirely on the technologies of connecting floating bodies in open

seaways. Previous studies and operational experience have proven that connection systems based on existing technologies are inadequate for open sea operations. Improved connection technology must be developed.

Technologies to perform rigid and flexible connections are required for at-sea fabrication of large pontoon facilities. As a good rule of thumb in ship design practice, the lateral dimensions of a rigid hull must be less than 15 times that of the vertical dimension for better strength efficiency. Pontoon modules may be assembled into rigid structure components with rigid connection techniques to provide a continuous solid surface. These components may be further assembled with flexible connection techniques to form a desired configuration with dimensions exceeding the ratio of better structure efficiency. The rigid connectors are also referred to as the module connectors, and the flexible connectors as the barge connectors.

Development of such technologies makes possible the subsequent development of high sea state pontoon facilities to provide a reliable lighterage system with expanded throughput capabilities as addressed in CNO OP42 Document N4 Logistics Technology Development Requirements of 15 Mar 93.

1.3 TECHNICAL BACKGROUND

Proven flexible connection systems currently exist for small barges. These connection systems are mostly intended for use in inland waters. The only connection system with open sea capability is the Navy flexor connector. However, this connector is very difficult to install in seaways rougher than high sea state 1.

Current techniques for assembling rigid barges from pontoon modules rely entirely on pins. Such connections can only be installed in dead calm waters. Revolutionary new concepts for module connector design need to be identified, explored, and developed to make open sea connections of floating pontoon modules a reality.

A major obstacle to open sea connections of floating bodies is the wave-induced motion of the bodies themselves. A simulation model capable of addressing the dynamic performance of generic connection systems has been developed in FY92's Replenishment Project, Task C-1: Forward Based Cargo Transfer Technologies. This model will be expanded in this task to provide a data base in support of the conceptual development and evaluation of new connector concepts. The model needs further validation with experimental data.

1.4 METHODOLOGY

This task will be executed following a system development procedure that includes concept generation and iterations of a conceptual design, test, and evaluation process. Experiments will be conducted to guide and validate the new concept development. Numerical models will be used to support the conceptual development and experimental studies. Experimental results will also be used to validate the numerical model. This effort will investigate and resolve the following issues:

a. The influence of structural and environmental parameters on the performance of connection systems.

b. The capability and deficiencies of the Navy's connection systems in rough seas and feasible solutions to the deficiencies.

c. Applicability of the existing connection technologies to the existing and future Navy pontoon system.

d. Impact of improved open connection technologies on the operational strategy of pontoon systems.

e. Analytical evaluation of dynamic performance of coupled pontoon modules in close proximity to each other.

f. Application of automation technology to the conceptual connection systems to reduce the manpower requirement and increase safety and effectiveness of connector installations.

1.5 SCOPE

This report documents the major findings to date from Task C-8 on the Advanced Module Connection Technology of the Replenishment Project (RM33U62) of the Navy Exploratory Development Program - LH2A, Facilities and Materials. An innovative connection concept of promising high sea capability, evolved through efforts to date, is presented. The theoretical rationale, technology data base, and engineering justification in support of this selection are discussed in detail. Recommendations and plans for future development are also included.

Chapter 1 of this report presents an overview of the project, addresses the problem issues, discusses technical status, and proposes a solution methodology. Chapter 2 specifies the fundamental requirements of the connection system under development. Chapter 3 summarizes the status of relevant technology to date. Chapter 4 addresses the technical approach and identifies major tasks to be addressed along with a tentative progress schedule by fiscal year. Chapter 5 quantifies the hydrodynamics and dynamics of the coupled pontoon modules and barges in seaway conditions. Chapter 6 summarizes the processes associated with concept generation, development, evaluation, and selection. Chapter 7 summarizes the results of an at-sea test of the recommended pull-in method. Chapter 8 summarizes the major findings to date, technical issues encountered, and recommendations for future efforts. Appendix A gives the details of the universal end connector system for NL pontoon barges. A contractor report on the hydrodynamic analysis is included as Appendix B. The results of an in-house brainstorming session to investigate applicable technology are summarized in Appendix C, while some additional primitive connection concepts proposed by contractors are listed in Appendix D.

CHAPTER 2

REQUIREMENTS SPECIFICATION

Although many structurally acceptable concepts are available that could be developed for the connection of multiple modules into large platforms, a realistic connection design must vary with module size, connection scenario, equipment constraint, and operational sea environment. A general method for universal application does not seem possible. The present task attempts to develop a connection technique that enables the realization of the Navy's new high sea state pontoon system. The conceptual dimension of the basic modules for the new pontoon system is illustrated in Figure 2-1. A connector system design which is safe, durable, and operable in the LOTs environment must consider the following:

a. **System Compatibility**: The connection system shall maintain pontoon modules close to the boxed shape configuration for maximum compatibility to other Naval pontoon facilities for wide applications. Modification to the pontoon module design should be kept to a minimum. All components of the connection system must remain within an envelope conforming to the International Standards Organization (ISO) standard for shipping. The connector system shall not cause the total weight of a module to exceed the lift capability of cranes aboard the containerships.

b. **Structural Integrity**: The connector must withstand the concentrated connection loads and must distribute these loads into the primary module structure. Upon completion, the connections must be able to withstand dynamic loads induced by sea state 5. The connector system should be so simple that there is no concern over its mechanical functions. Interfacing with the pontoon modules should be simple. Whenever possible, connection loads are best transmitted by the primary internal structure as opposed to the discrete connectors.

c. **Operability:** The system requirements for the new high sea state pontoon system have yet to be fully specified. The baseline NL system requirements will be adopted at the early stage of connector development. The connector mate-up must be possible under conditions of relative motions between the modules in choppy seaway conditions from sea state 0 to sea state 3 with limited heavy lift equipment. The connections must be installable within 30 minutes per connection in such weather conditions. The connection process must not require precise control of the modules or the connection devices. The connection system must not noticeably reduce the load carrying capability of the pontoon module. The installation must not require the use of heavy material handling equipment or more than two tender boats per connection line. The connection system must be able to join modules floating at different drafts. The connection must be installable by crew members of apprentice seaman skill level. The connection procedure shall not require personnel and equipment transfer between the floating units to be connected.

d. **Reliability.** The connection system must be so simple that there is no concern over its mechanical functions. The connection procedure shall not require the use of unique tools or

special military assets. The connection system and any related usage tools must not comprise an intricate mechanical system. The connector system must be unaffected by dirt, corrosion, and neglect. No part of the system should be vulnerable to damage from impacts or collisions occurring during deployment or assembly. The connector system should not be vulnerable to damage from misuse or forced operation by personnel. Maintenance requirements for the connector system should be minimal and simple. Loose (unattached) parts or subsystems should be avoided whenever possible. Moving parts should be kept to a minimum. Moving parts, if any, should be readily accessible and easily replaced. The connection system shall be sufficiently simple for easy handling in total darkness, in cold, wet, and windy weather, and by crews wearing heavy protective clothing. The connection process must not require personnel to perform operations that require a high degree of precision.

e. **Producibility:** The connector system should not require tight manufacturing or repair tolerances on the modules or connector components. The connection technology must be applicable to the various module designs of similar size. The connector system should be consistent with the module's damage and repair cycle inherent in its operational life. The connection system shall be low cost, low maintenance, and suitable for mass production.

f. **Safety:** The connection system shall provide maximum safety while in use and minimize hazards should a failure take place. The crew members must not be required to handle heavy hardware or place themselves in dangerous unsafe situations at any time during deployment and connection operations.

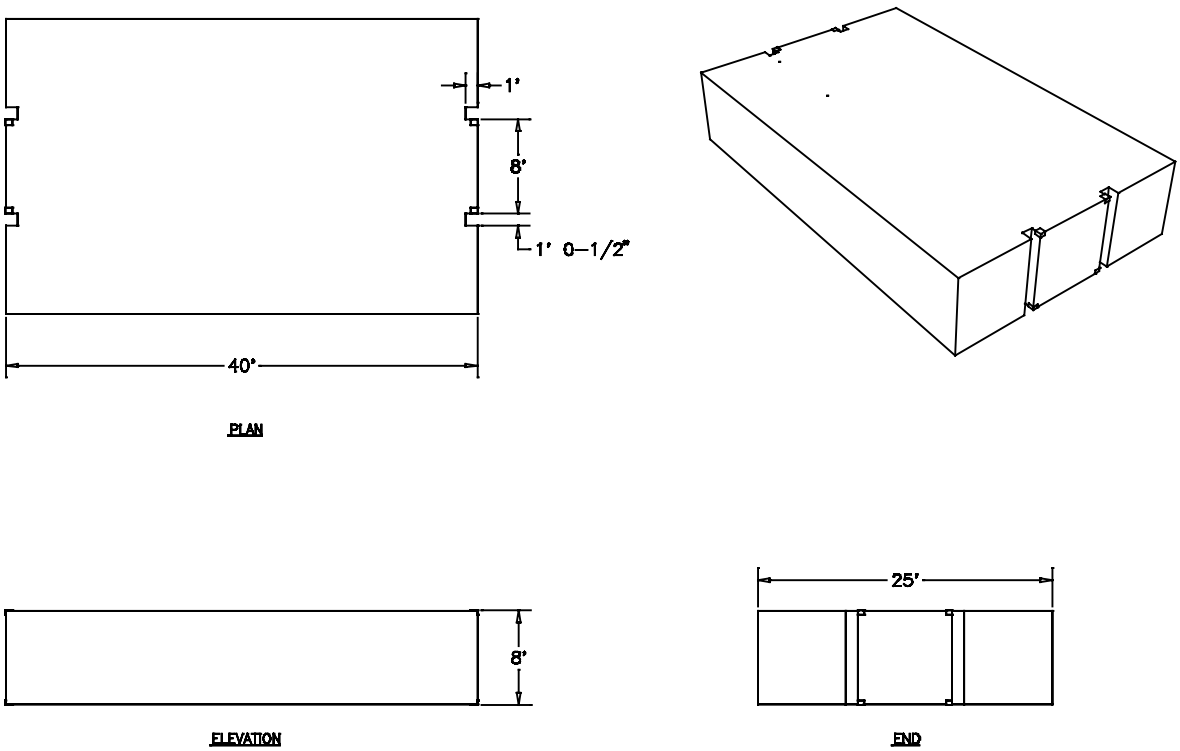

Figure 2-1. Nominal dimensions of the Navy's high sea state pontoons.

CHAPTER 3

TECHNOLOGY ASSESSMENT

Existing module connection technology has been investigated via a thorough search of the information data base in the public domain, including Defense Technology Information (DTIC), National Technology Information Services (NTIS), U.S. Patents, Sea Technology, Buyers Guide Edition, Thomas Registry, responses to the Sources Sought Announcement on Commercial Business Daily, and brochures provided by the manufacturers. The purpose was to identify the existing connection systems to avoid possible duplication of previous efforts and collect relevant technology to support the concept development effort. The outcomes of the DTIC and NTIS searches are essentially the NL pontoon system and patented commercial systems. The existing technology may be summarized in terms of patented systems and military assets as presented in the following sections.

3.1 PATENT SEARCH

Delong Boat and Barge Combination (Patent No. 3,345,970) (Figure 3-1). This connection combination consists of a barge configured with an aft cradle to receive a pusher tug. The tug is partially supported by the cradle. Hydraulically actuated pins are engaged to hold the tug in position. This design requires major hull deviation from a preferred boxed shape for pontoon modules.

Apparatus for Coupling Tugboats to Barge (Patent No. 4,688,507) (Figure 3-2). This apparatus is used for coupling a tug boat to a barge having a notch in the stern. Coupling units mounted on the opposite sides of the tug have extensible and retractable rams which carry toothed heads into and out of toothed channels on the opposite sides of the stern notch. The rams are actuated by electric motor.

Barge Coupler Assembly (Patent No. 4,714,042) (Figure 3-3). This coupler assembly connects two floating structures by fitting a pair of vertically oriented wedge pins into coupler boxes spanning across the adjoining side walls of the structures. The connection requires precise alignment at coupler housings.

Ship Connection Structure (Patent No. 3,973,512) (Figure 3-4). This connection is also made by fitting the bow of one section to the stern notch of the other. Pneumatic fenders are installed at the inside of the notch to protect the coupling surfaces.

Dyer Tow Coupling (Patent No. 2,684,653) (Figure 3-5). This connection system uses a jacking system to align the deck elevation and spring-loaded shear pins prevent relative heave, sway, and roll. It assumes cable and turnbuckle systems for holding the barges tightly together. All connections are made near deck height, such that the results are essentially a flexible

connection. Although this design is intended for calm water uses, the spring-loaded shear pin has high potential to be expanded for open sea application if a new barge alignment method is developed to overcome the large barge motion induced by waves.

P-8 Pontoon Flexor and Pipe Connector (Patent No 4,290,382) (Figure 3-6). The standard Navy pontoon connector consists of male and female pipe couplings that absorb shear and compression forces, and a universal Flexor to handle loads.

Skaalen Flexible Side Connector (Patent No. 4,325,670) (Figure 3-7). This is a flexible side connector assembly comprising an in-line flexural system having a plurality of rubber compression elements and a solid shear member. Both the adjacently aligned flexural member and the shear member have grooved solid heads on opposing ends of the assembly for inserting guillotines in the opposing barges to be connected. This design allows only limited rotation between barges and, therefore, works better for side connections.

Mariner Flexible Connection for Articulating Vessels (Patent No. 3,799,100) (Figure 3-8). This primitive concept of a flexor connector uses composite tension elements to resist primarily tension loads. A section of rubber block is incorporated to resist shear forces.

Freitag Universal Coupling System (Patent No. 4,080,921) (Figure 3-9). This design incorporates at least two piston and pivot pin assemblies that permit limited movement in roll, pitch, and yaw. This feature has better potential to accommodate the random motion of the barges in seaways. Warping lines strung with a constant tension winch are used to bring the barge together and align the connector components for connection.

Connectors (Patent No. 4,100,875) (Figure 3-10). This design offers safe devices to tighten fasten lines for barge connections.

Electromagnetic Coupling for Two Boats and a Barge (Patent No. 4,949,663) (Figure 3-11). This coupling apparatus includes a bumper frame which is pivotally carried by the tug. The bumper frame includes a bearing surface to take the compression. A magnetic coupling in the form of a plurality of coil members is carried at the load transfer surface. This developes a magnetic field for attraction between the barge and the tug.

Barge Connecting Apparatus (Patent No. 4,947,778) (Figure 3-12). A truss structure combined with fenders and a link chain is used to connect and maintain two barges at a desired separation. Barges are allowed to pivot about the ends of the connection truss to a certain extent.

Watercraft Coupling System (Patent No. 3,892,195) (Figure 3-13). Tension elements accompanied by a push-type ball joint coupling are used to connect a tug and barge combination.

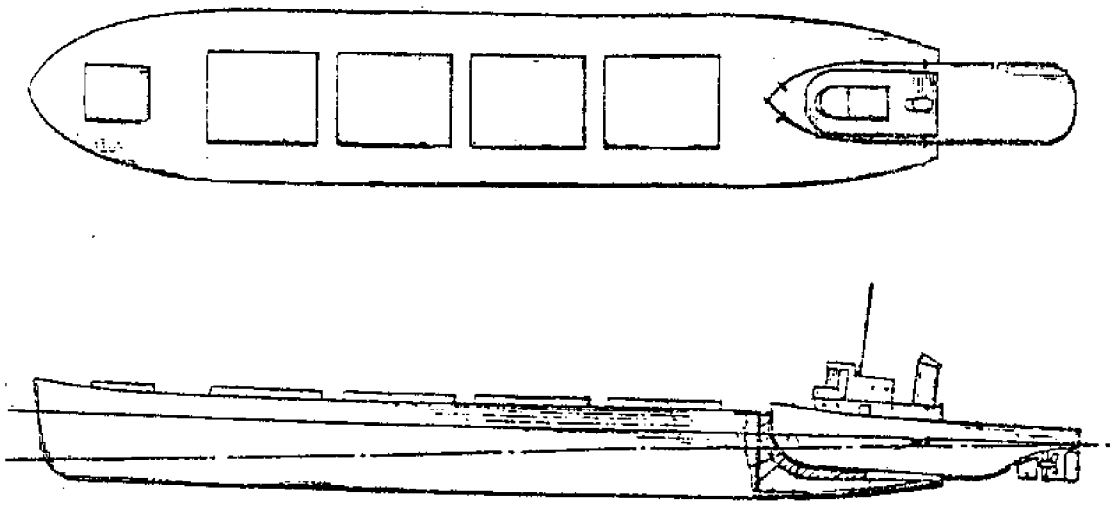

Figure 3-1. Delong barge and tug combination (Patent No. 3,345,970).

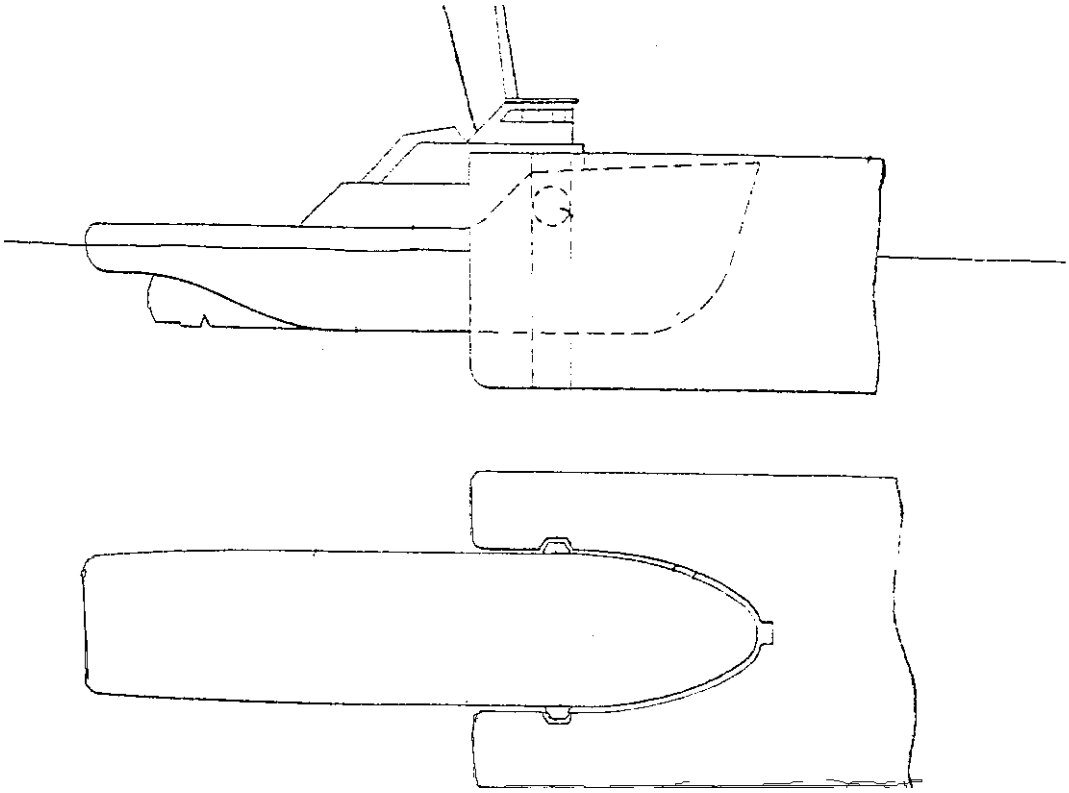

Figure 3-2. Apparatus for coupling tugboats to barge (Patent No. 4,688,507).

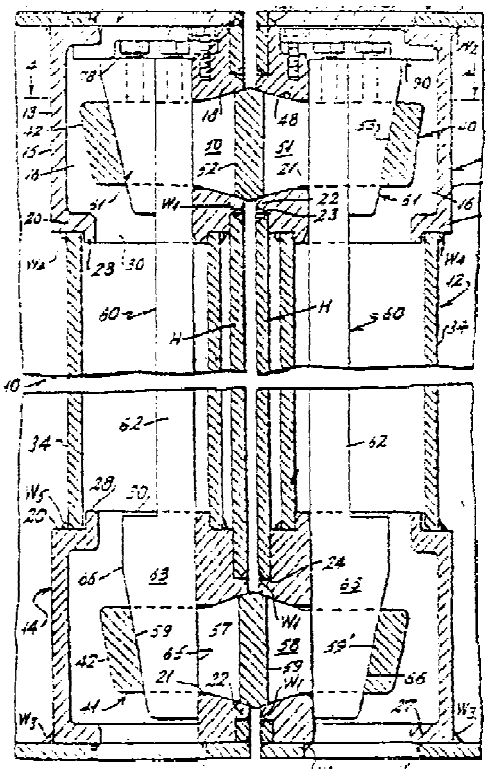

Figure 3-3. Barge coupler assembly (Patent No. 4,714,042).

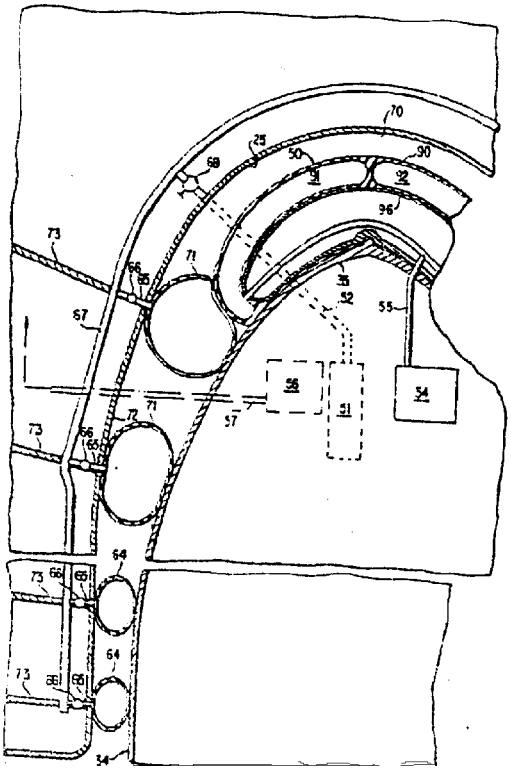

Figure 3-4. Ship connection structure (Patent No. 3,973,512).

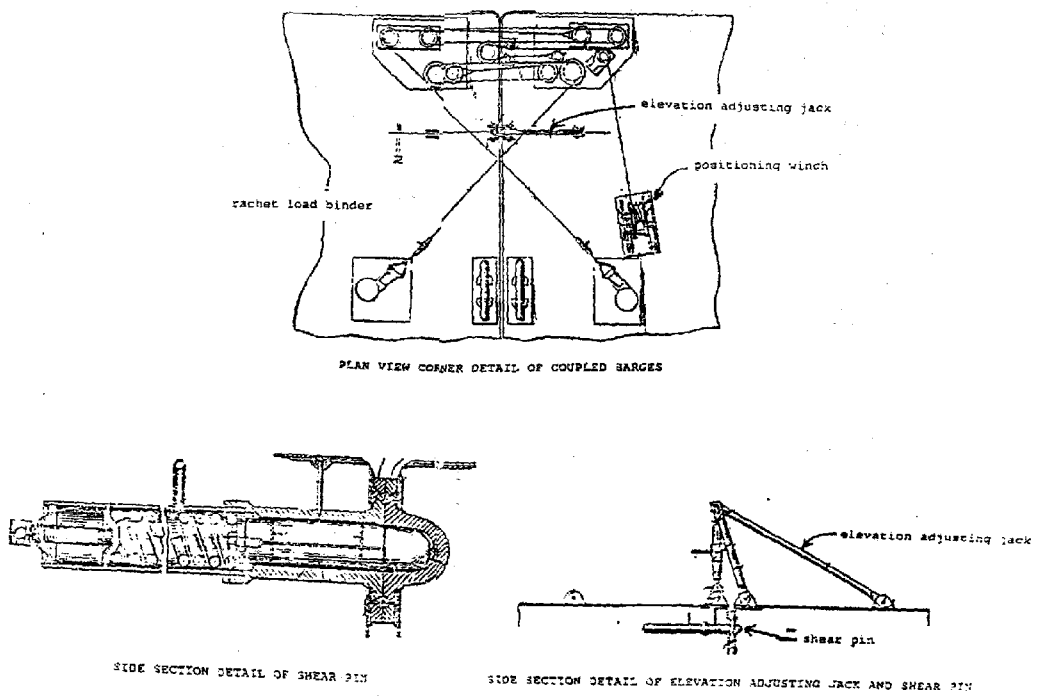

Figure 3-5. Dyer tow coupling (Patent No. 2,684,653).

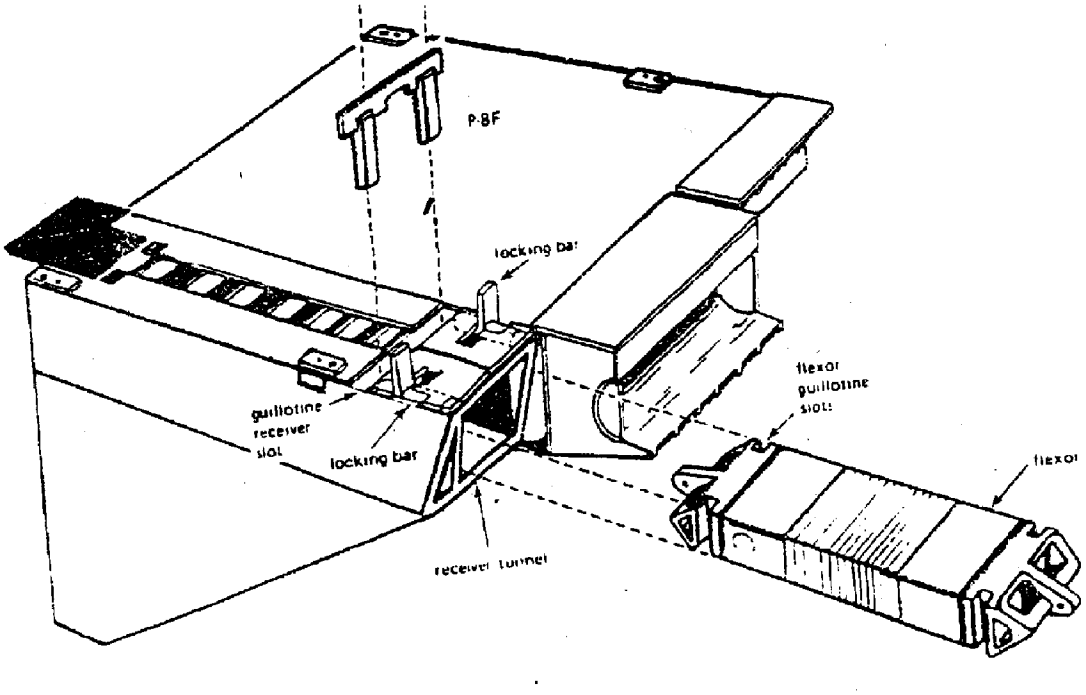

Figure 3-6. P-8 pontoon flexor and pipe connector (Patent 4,290,382).

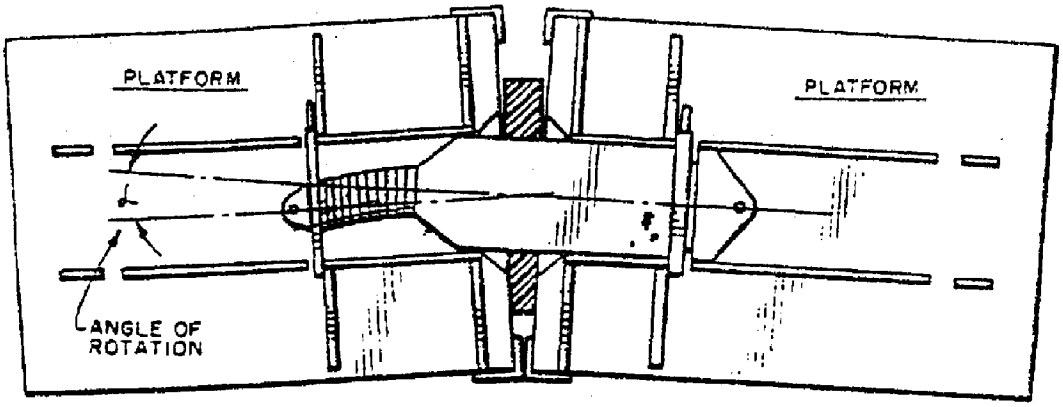

Figure 3-7. Skaalen flexible side connector (Patent No. 4,335,670).

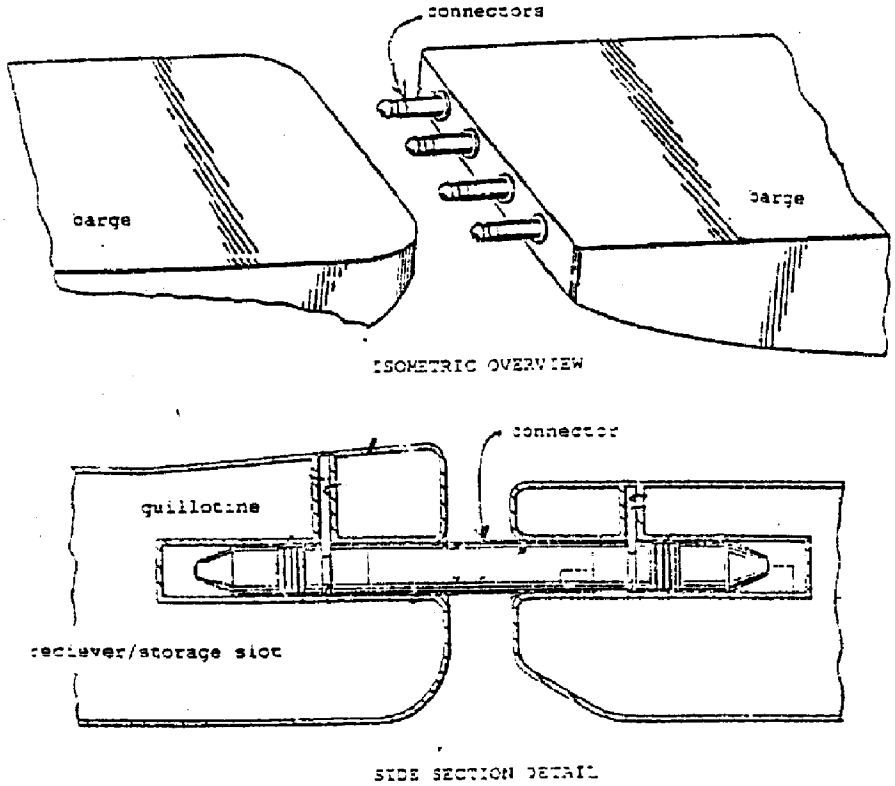

Figure 3-8. Mariner flexible connection for articulating vessels (Patent No. 3,799,100).

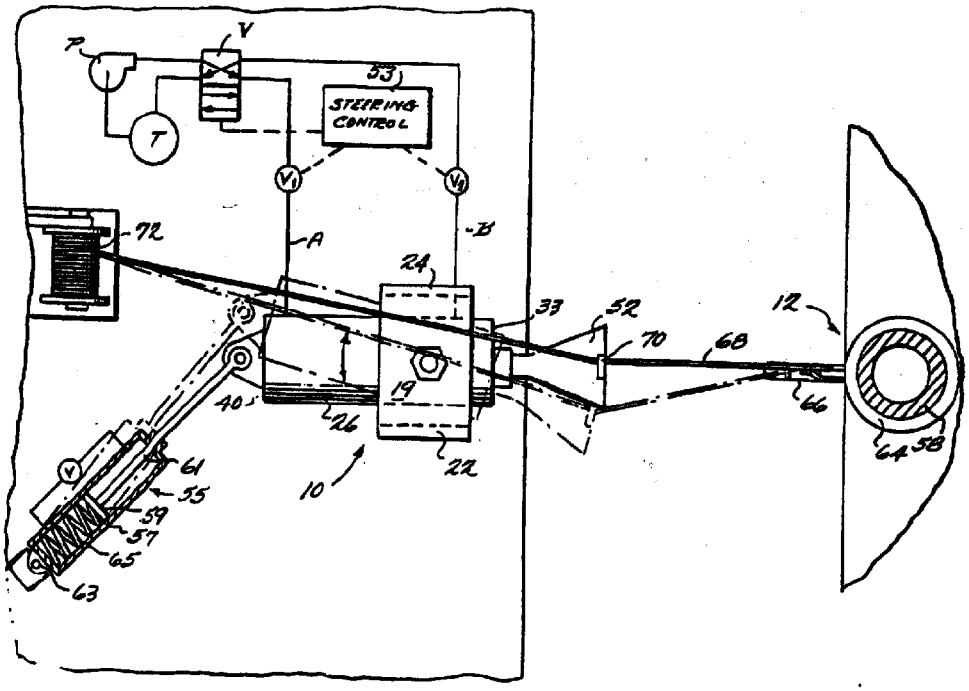

Figure 3-9. Freitag universal coupling system (Patent No. 4,080,921).

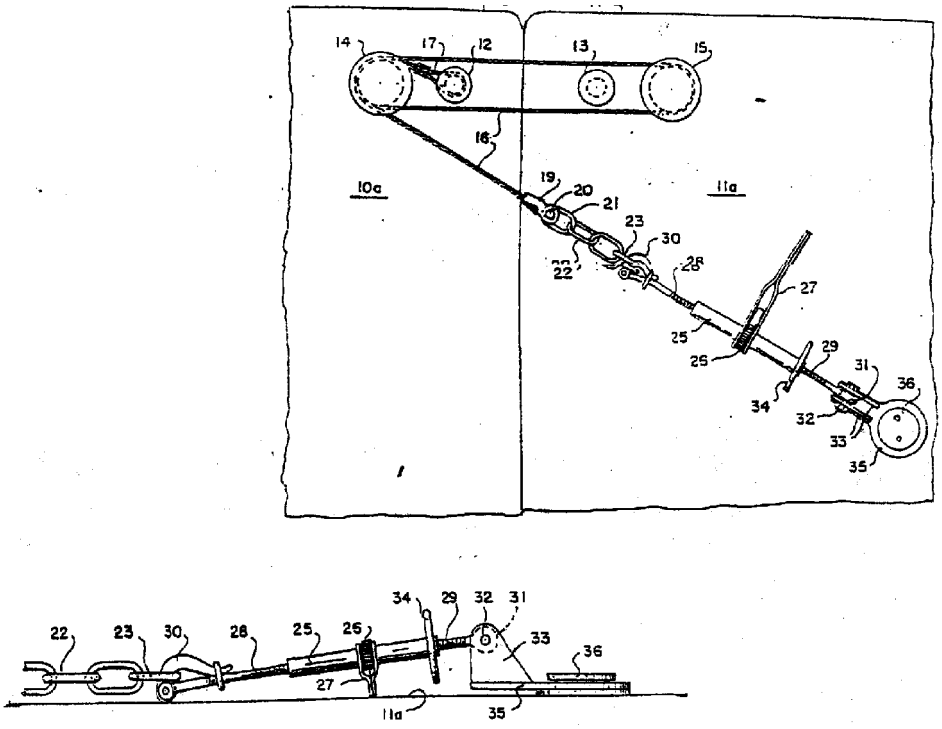

Figure 3-10. Connectors (Patent No. 4,100,875).

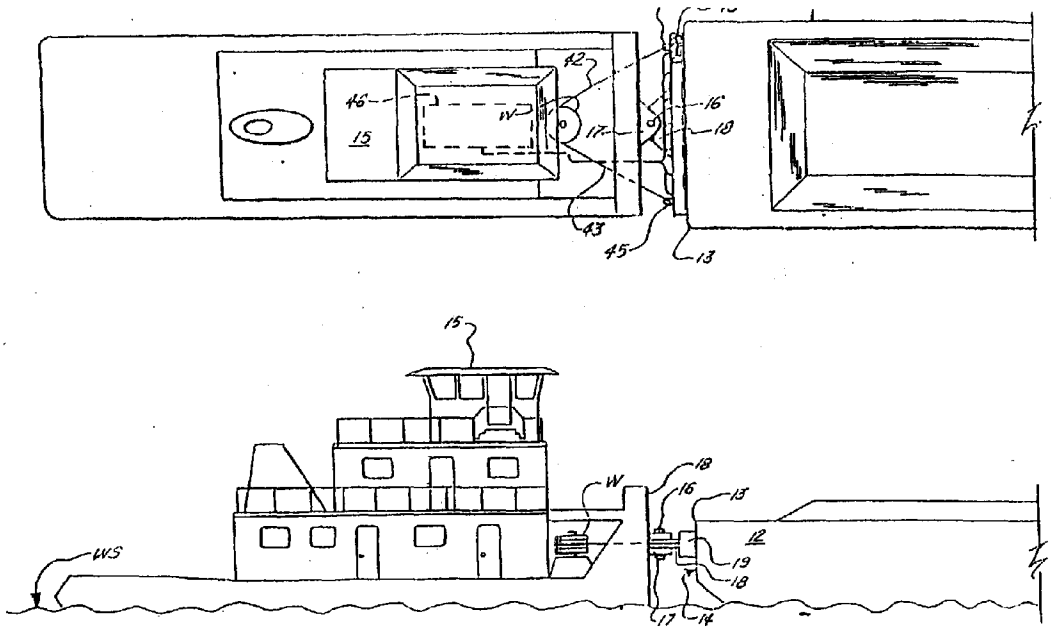

Figure 3-11. Electromagnetic coupling for two Boats and a barge (Patent No. 4,949,663).

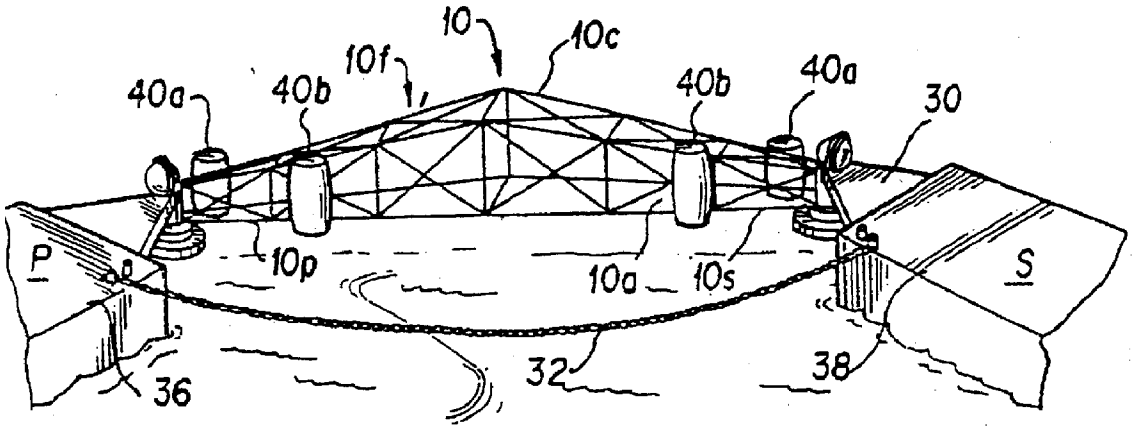

Figure 3-12. Barge connecting apparatus (Patent No. 4,947,778).

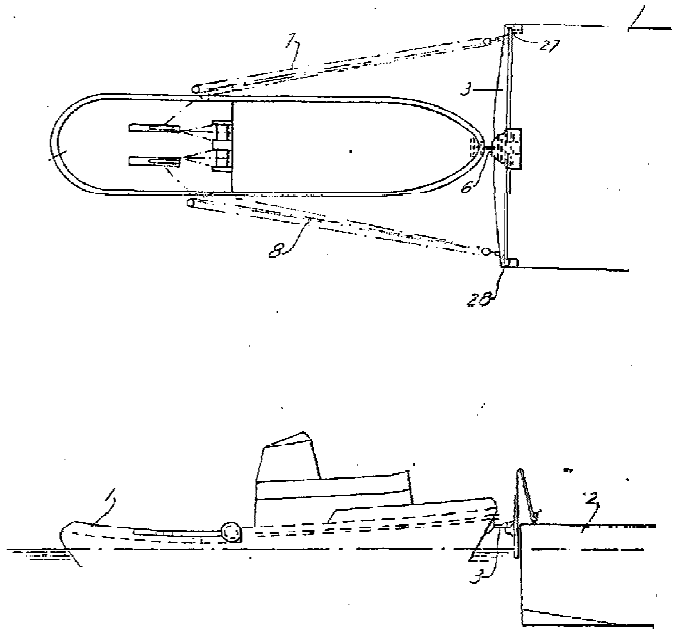

Figure 3-13. Watercraft coupling system (Patent No. 3,892,195).

3.2 OTHER COMMERCIAL CONNECTION SYSTEMS

Other commercial connection technologies that do not appear in U.S. Patent records were identified through responses to a Sources Sought Announcement in the Commerce Business Daily. Several connection attachment designs that allow coupling of push tugs with barge trains were explored. Most of them are used to connect small barges in the inland water. Four examples of typical pushing barge arrangements are the INTERCON system (Figure 3-14) by Intercontinental Engineering-Manufacturing Corporation, SEA-LINK (Figure 3-15) by L. R. Glosten and Associates, Inc., SEEBECK tug/barge system by A. G. Weser's Seebeck-werft in Germany (Figure 3-16), and the HYDROPAD system (Figure 3-17). The INTERCON system uses a 4-foot-diameter solid steel tapered gear pin mounted at midship on the tug to engage with a connection ladder at the stern notch of the barge to be joined. This system requires a deep notch equivalent to half of the tug length. The SEA-LINK system uses a push frame that is hinged to the stern of the barge and pinned to the tug amidship. Relative pitch yaw is permitted. The SEEBECK system consists of a ball-type coupling hitch that extends from the bow of the tug and connects by means of hydraulic-energy absorbing devices to a trolley riding in vertical guide bars fitted to the stern of the barge. Relative motion is also allowed. All of these connection systems are heavy and require hydraulic systems to run. The HYDROPAD system uses hydraulic pads to position the tug in the barge's notch. Hydraulically operated levers on the rear of the tug pull warping lines attached to the rear of the barge to hold the tug in the notch.

Another typical example of an open sea connection system is the mooring yoke of a single point mooring system, see Figure 3-18. The universal joint technology employed in the mooring leg design may be applicable to the flexible connectors as well.

Some connection systems which are in use with commercial pontoons have been explored extensively by the military. Details of these connectors will be discussed in the following section.

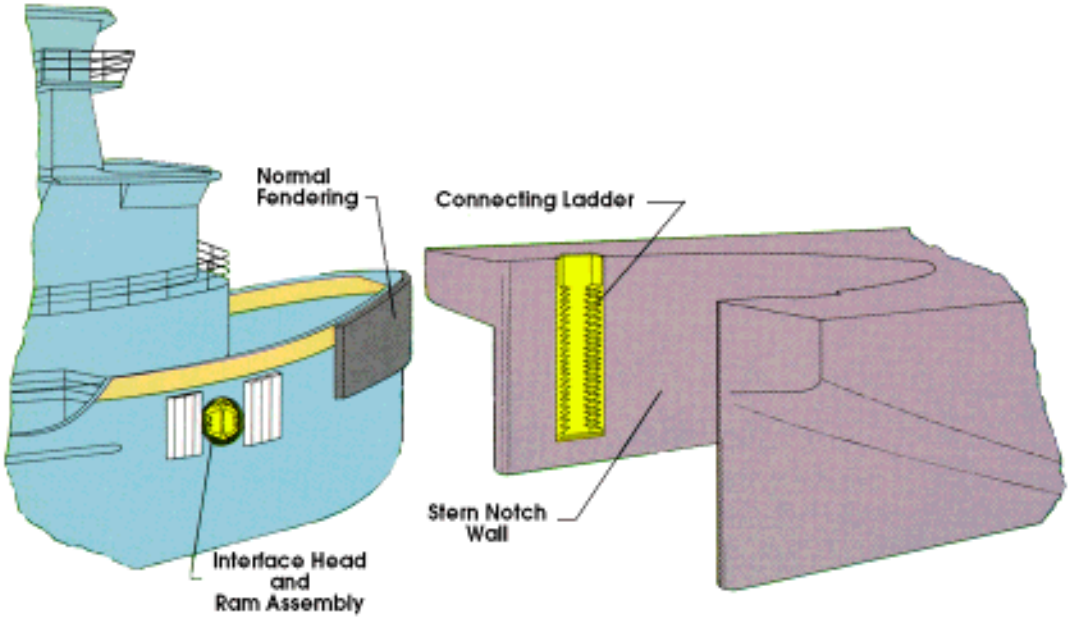

Figure 3-14. INTERCON system

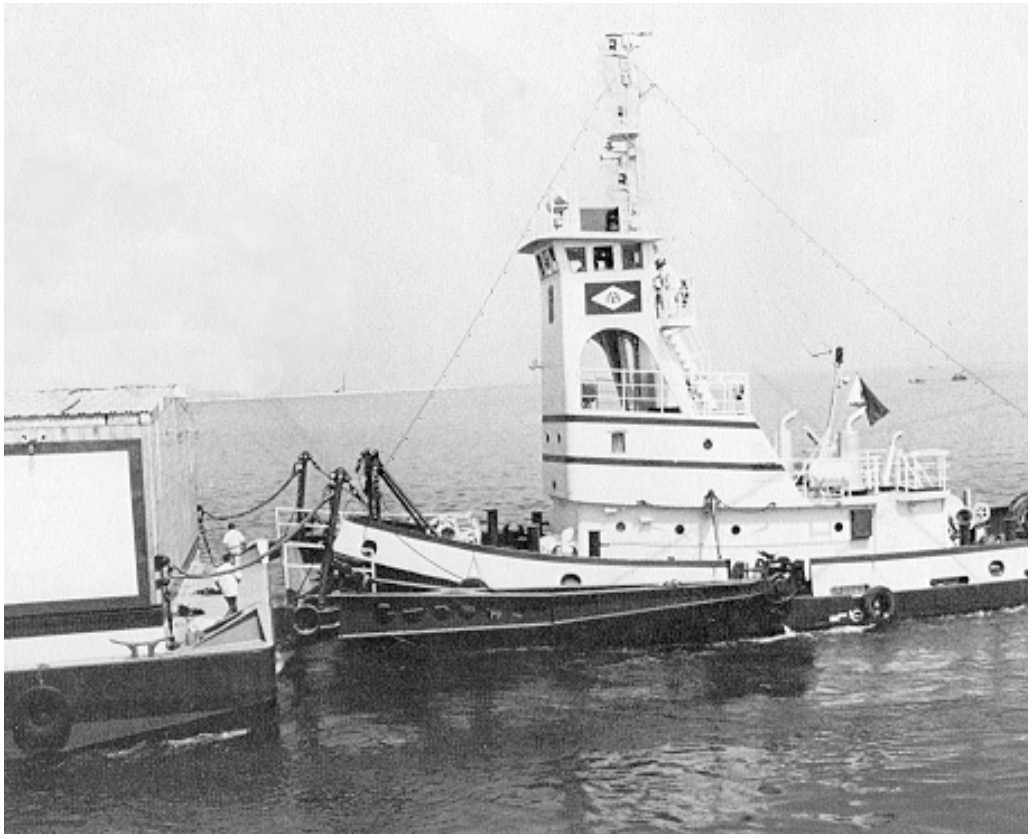

Figure 3-15. SEA-LINK system.

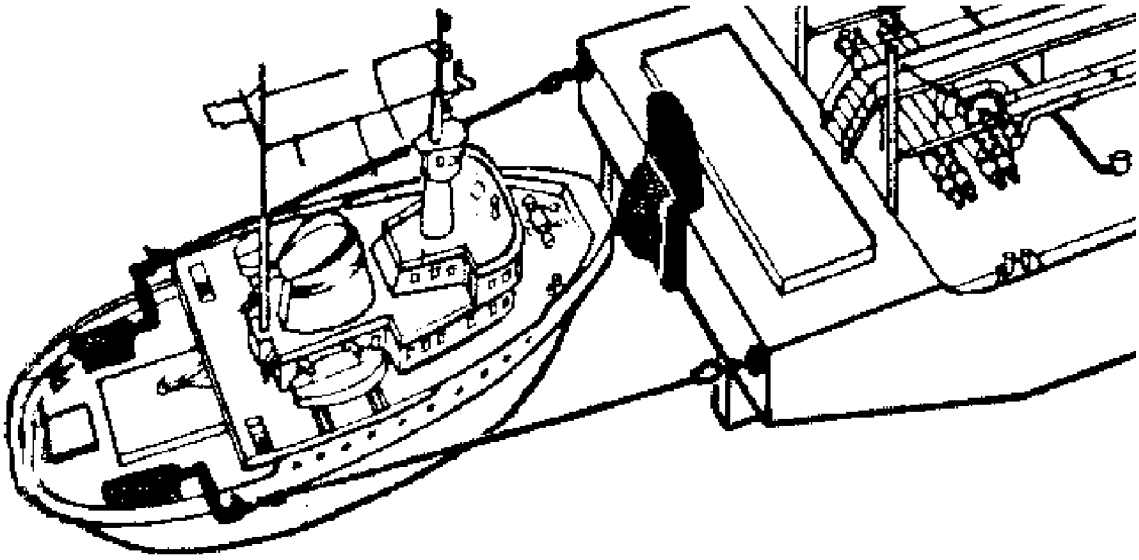

Figure 3-16. SEEBECK system.

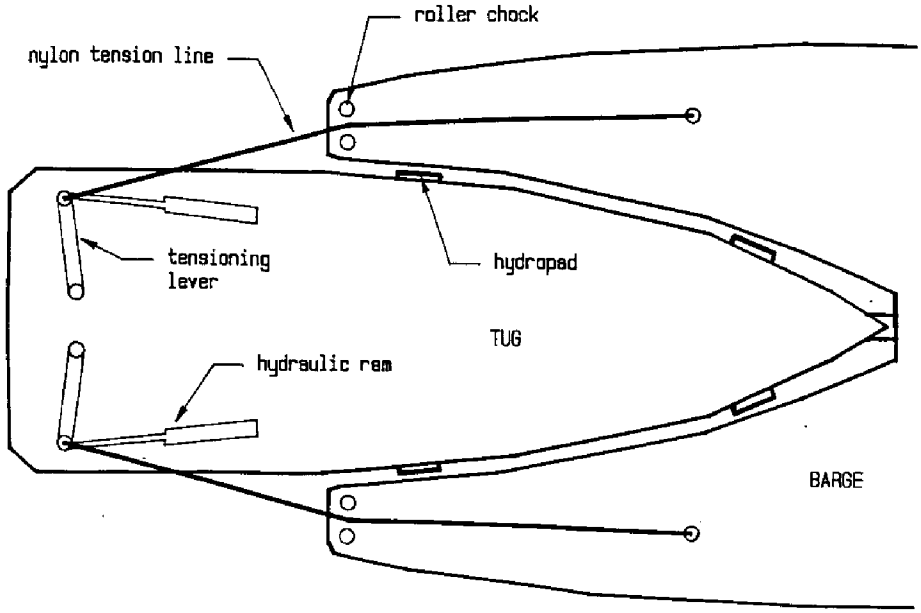

Figure 3-17. HYDROPAD system.

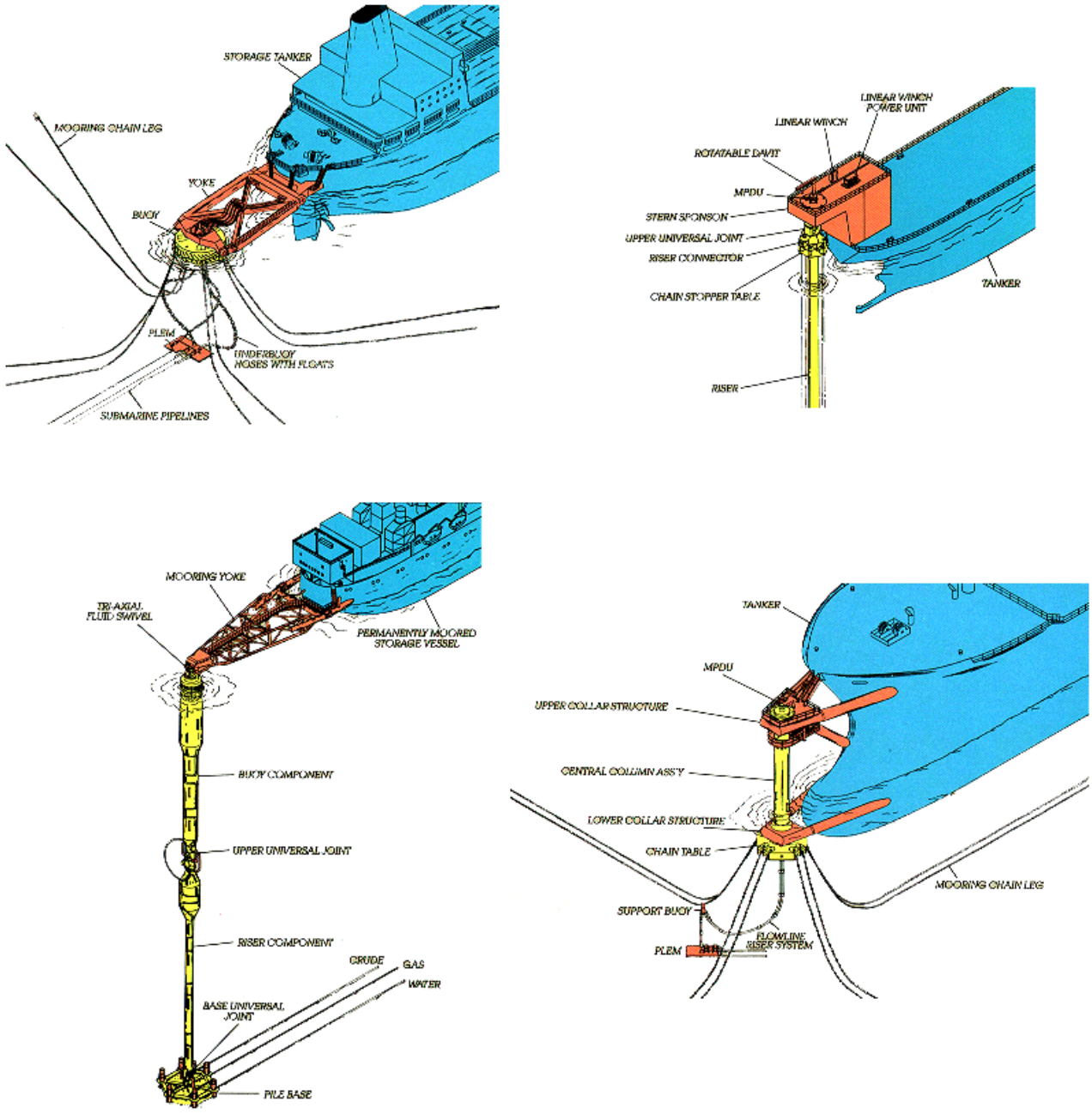

Figure 3-18. Examples of mooring yokes.

3.3 MILITARY PRACTICE

3.3.1 Rigid Connection

Over the last decade, a variety of commercial modular barge systems with different means of connection have been evaluated by the U.S. Military, including Robishaw Flexifloat Series H-50 Modules and C45 ISOLOG Modules and modules manufactured by RENDRAG, Inc. These modules may be connected on deck or in the water along side of the delivery vessel. Lighterage assembled from modules in the water has been tested to evaluate the influence of waves on the connection process. These modules are designed to be joined by a large number of small connectors positioned a few feet apart along top and bottom edges of modules. ISOLOG modules for example are connected with small sliding pins from one module to the receivers on the other and locked manually. RENDRAG modules, on the other hand, use dog-bone shaped pins which are dropped into vertically oriented receptacles located along the adjoining sidewalls. These procedures require a high precision of alignment between pins and receivers before the pins can be set in position.

3.3.1.1 Connection in the Water. Modules to be connected in water are pulled together and controlled by hand with ropes and hand-held fenders hanging over the sides of modules to protect the module from collision. The connections that require direct crew involvement at the connection faces are made manually. Operational experience indicates that this process can only be performed in waves less than 1 foot high. With 1- or 2-foot high waves, aligning modules and inserting pins become very difficult and at times present severe safety hazards. Such experiences were witnessed during JLOTS III in an attempt to assemble a prototype Modular Causeway Section (MCS). The MCS was partially assembled into two half sections on deck before being lifted into the water for final assembly. The exercise was postponed because of the presence of swells at the time of final assembly that caused wild motions between the half sections. It was reported that, at times, the bottom of one section was about level with the top of the other. An attempt to gain control over the sections by pushing them against the ship side with tugs was not successful. The connection was eventually made with more tugs in the sheltered water provided by the delivery ship. The operation was partially delayed. In times of war, it would not be possible to wait until the weather subsided.

3.3.1.2 Connection on Deck. The Army's ISOPAK illustrates the procedure for making connections on deck. The ISOPAK stacks a pair of raked end sections, nose to nose, atop and connected to 40-foot intermediate section MCS modules for stowage and transport. When used, the stack is unfolded and connected on deck to form a rigid 80-foot-long string with the assistance of ship cranes. The string is then lifted into the water for further side connections. This assembly procedure is not any easier than the procedure in the water. The on-deck assembly takes a large deck space and heavy lifting capability to launch the assembled sections. Greater care is required to align the modules perfectly for connector installation.

3.3.1.3 NL Pontoon Causeway. The NL pontoons are assembled by bolting the pontoons to large angles to form rigid barge sections (Ref 1). This process is definitely a task to be accomplished on land.

3.3.2 Flexible Connection

The Universal End Connector System is the primary means for flexible connection of NL and MCS barges. The system is comprised of Flexor tensile connectors and the P-8 pontoon assemblies which house the Flexors. Details of the Universal End Connector System are summarized in Appendix A. The function of the Flexor connector is to withstand the tensile forces generated by the movement of the connected causeways, and under all normal operating conditions it serves very well. The P-8 pontoons are outfitted with pipe/socket shear connectors that absorb the lateral and vertical shear forces as well as the compressive loads. The concept of a urethane-encapsulated tensile member was adapted to the specific needs of the Navy's Amphibious Fleet by considering the lighterage to be connected and the resources available to effect those connections. The system has proven to be reliable and effective during approximately 14 years of service. The flexible connection can be performed in low sea state 2. A typical joining technique cited on the Navy's operation manual for flexible connection is a "hit or miss" method. The barges to be connected are brought together with tugs until the shear connectors are engaged to align the barges. To get the shear connectors lined up and engaged requires skill, coordination, and luck even in extremely low seas. The barges have to be held together under the power of tugs until Flexors are fully engaged. Current fleet practice of flexible connection is described in the following paragraphs.

3.3.2.1 Calm Water. If a platform is to be operated in areas where harbor or sheltered waters are available, the assembly usually takes place within the protected area. This method takes advantage of the calm water and can be done in a more leisurely manner, as scheduling permits. Typically, the sections are at about the same trim and one is held fast while another is pushed into engagement. Once the shear connectors are seated, the guillotines are raised and the Flexors are worked forward with 6-foot pry bars until they are locked in place. In cases when the modules float at different drafts or trims, some relative motion between the sections will help to facilitate working the shear connectors into place.

3.3.2.2 Open Sea Marriages - Unassisted. The alignment and connection of the causeways is typically done in the lee of a ship, usually the transport vessel. If the vessel will permit operations alongside, one section or a string of connected causeways can be secured to the vessel and held fast while other causeways are brought in for marriage. The usual method involves easing the single section along the hull of the ship in line with the secured section(s). Once initial engagement is achieved, the controlling SLWT maintains power to keep the sections together while the Flexors are extended and secured. One variation on this "free style" method is to position the SLWT (Figure 3-19) on the leading section(s) in such a way that it overlaps the trailing stern of the tow by 10 to 15 feet. This forms a pocket that the trailing section may be forced into and provides a wall on one side of the connection that prevents either section from slipping past.

3.3.2.3 Open Sea Marriages - Marriage Bridle. Experience has shown that the most reliable way to join two randomly moving sections is to connect them with a wire bridle and pull in on one end, gradually pulling the sections together. The winch wire is fairled to the center of one end of the adjacent causeway, outhauled down the length of the center string, and attached to a pair of 1-inch wire bridle legs. The legs fork to opposite sides of the section through cleats and pass to the end of the trailing section. At a separation of 30 to 35 feet, the wire bridle

allows each section to heave, pitch, sway, and yaw without too much resistance. The motion of one causeway is increasingly transferred to the other as the bridle is hauled in and the wires become shorter. As the separation decreases, the load on the bridle wire increases as the sections try to move in response to the waves. It is important that the deck officer be prepared to bring the sections into full engagement as quickly as possible while being alert for any requirement to slack the wire and back off.

The Pontoon Gear Manual, NAVFAC P-401 (Ref 1), gives a brief description of the rigging and procedures to follow for effecting an open sea bridle marriage (Figure 3-20). While the example cited could be effective in lower sea states, it is not the best method for higher sea states as shown by field exercises.

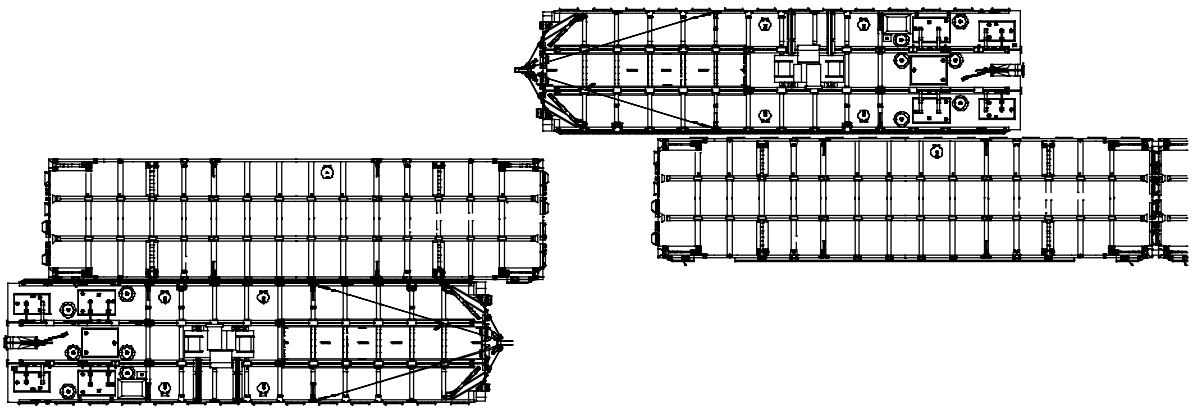

Figure 3-19. Unassisted method of connecting NL causeways.

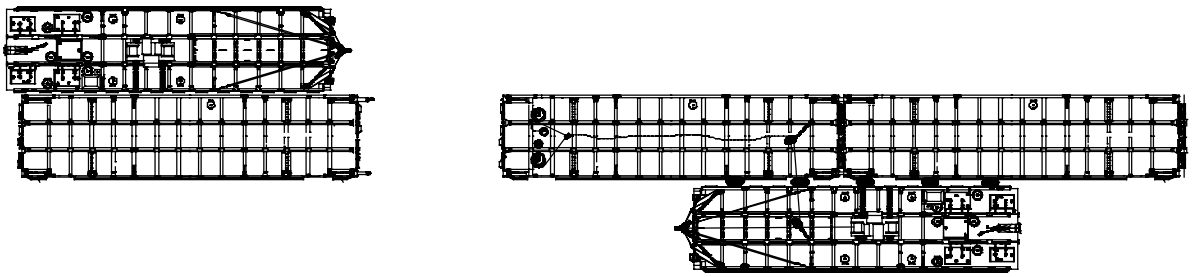

Figure 3-20. Existing method of connecting NL causeways by marriage bridle system.

3.4 SUMMARY OF THE TECHNOLOGY STATUS

Modular construction of pontoon structures from standard modules can take one of two forms: rigid or flexible. A rigid construction provides continuous deck surface for flexible deck layout arrangements. Cargo and deck structures can be placed anywhere on that surface. However, a rigid platform has to resist high bending stresses and requires modules of large overall depth. A flexible construction, on the other hand, substantially reduces the bending stresses so the modules can be designed with better structural efficiencies. The drawback of flexible connection is the presence of discontinuities between rigid units that constitute a major obstacle to the traffic across modules and limit the maximum size of deck structure or cargo to be placed on deck. Tradeoff is necessary to make the facility design practical and economical.

Technology suitable for rigid barge construction in open seaways from pontoon modules does not exist at present. The Navy's NL barges have to be constructed on land. The Army's MCS barges are partially assembled on deck of a specialized ship before launching for final assembly in the water with a method inherited from the use of commercial pontoons. The method uses a large number of small stab pins which are secured by guillotines. This procedure is found to be time and labor intensive and requires precise alignment between connection components. The connection can only be made in an essentially calm water condition.

Flexible connection techniques are available. Commercial flexible connection systems are mostly for inland water use. Most designs utilize delicate jacking systems and sophisticated rigging systems, which appear rather fragile for open sea operations. Some systems further require special hull geometry to actuate barge alignment for connection. One typical example is the coupling used to join a push tug with barge trains in inland waters. A very common practice is to fit the bow of a tug in a stern notch or cradle. Others use a rigid push frame hinged to the tug. Both use tension members to hold the barge together. These systems are very heavy. Making connections in open seas is difficult. The use of wire ropes to resist permanent dynamic loads is not a recommended offshore practice. The most effective flexible connection system to date is the Navy's NL Universal End Connectors. The connection system performs very satisfactorily once connected. However, the connection is difficult and dangerous in seaways higher than low sea state 2.

CHAPTER 4

TECHNICAL APPROACH

Many possible ways of connecting floating structures have been identified as a result of the technical review of the existing technologies. Although none of the existing techniques alone demonstrate the required open sea capability, the connection operation is doubtlessly possible. A reliable connection method that is simple, safe, cost effective, and universal in operation will be developed following a system development procedure that includes concept generation and iterations of the conceptual design, test, and evaluation process.

Development requires an extensive theoretical and empirical data base as well as practical experiences. The performances of floating modules and the potential connectors can be reliably addressed within the capability of existing theories and further validated with experiments. A numerical simulation model is currently under development to provide a relevant hydrodynamic and dynamic data base to support the connector development. Such factors as relative motion of separated modules and in-service loading on the connection system can be computed. This data base will be used to determine the mechanism of a practical connection system and identify the technology requirements. Applicable technologies can be gathered to formulate potential alternatives and the essential structural components of the selected concepts can be specified in sequence. Hydraulic model tests will be conducted to guide the conceptual development where theories are not available. The selected concepts will be constantly evaluated and validated with numerical simulation, hydraulic model tests, and at-sea tests as needed. In particular, it is most important that in-service experience, opinions, and preferences of fleet operators of current pontoon and barge systems be incorporated. Experts of academic institutions and relevant industries, end users, and system managers will be consulted to guarantee a complete perception of the solution.

CHAPTER 5

HYDRODYNAMIC CHARACTERISTICS OF PONTOON MODULES IN SEAWAYS

5.1 INTRODUCTION

Floating structures are highly weather dependent. Ocean structures must be compliant with ambient waves or sufficiently strong to withstand the wave-induced loads. Designs of these structures are typically dominated by the hydrodynamic and dynamic characteristics of the structures in seaways. Our previous experiences with NL systems indicate that modules of the size suitable for rapid transport by containerships are highly wave sensitive. These modules respond strongly to sea state 3 storms. The relative motion between modules causes a problem that an effective connection system has to overcome. A theoretical assessment of the open sea performance of pontoon modules at the connection stage has been conducted to provide basic guidelines for conceptual development.

The assessment was conducted to determine: (a) the wave-induced motion of modules in seaways, both during interfacing and after assembly, (b) the dynamic loads which must be resisted by connectors to achieve a rigid connection, and (c) the line tension on the cable used to pull two modules together in seaways. The assessment was conducted based primarily on hydrodynamic analysis performed by C.J. Garrison (Ref 2), supplemented by the results of an in-house hydrodynamic coupling simulation program, NAUTILUS (Ref 3), and the results provided by FBM Marine Holdings (UK) Limited (Ref 4). The results provided by Garrison are summarized in Appendix B. All computations have been performed within the context of linear, three-dimensional diffraction theory. The particulars of module and seaway parameters, as well as the results of analysis, are summarized in the following sections. All parameters are presented with reference to a Cartesian coordinate system as illustrated in Figure B-2 of Appendix B. The x-axis lies along the length of the barge directing from stern to bow and the y-axis points upward.

5.2 SCENARIO

Although it is understood that a delivery ship may provide substantial shelter from hostile weather, use of sheltered water presents several formidable drawbacks. First of all, this arrangement will tie up the delivery ship from other activities. It also requires the delivery ship to be moored broadside to waves to provide the desired shelter and therefore results in substantially higher roll motion of the ship, which is not conducive to crane operations while launching pontoon modules. In addition, most containerships are 1,000 feet or shorter in length. The actual sheltered stretch will be much less due to the nature of directional spreading of a realistic sea and wave diffraction. The connection process will be limited in a restricted water area. It may result in serious traffic congestion that substantially slows down the pace of operations. Furthermore, a runaway non-powered module in the vicinity of the delivery ship presents a fatal threat to the ship. The analysis here will assume an operation scenario in widely open waters.

Theoretically, relative motions are much less complicated when the longitudinal axis of the modules either aligns with (head seas) or is normal to (beam seas) the oncoming waves. However, analysis by NAUTILUS, taking into account the hydrodynamic coupling of floating bodies in close proximity, indicates that the relative surge and pitch motions in beam seas are significant. Furthermore, unless an extensive mooring system is provided, it is very difficult to maintain modules in position for connection. Real seaways are random in both headings and heights. A broadside wave with a long crest is very rare. The relative motion in head seas is more consistent and more predictable. Making connections with the long axis of the modules pointing into the oncoming waves is the more favorable condition, thus the analysis was conducted in this orientation. Results pertinent to the discussion of conceptual development are summarized in the following paragraphs (details may be found in Appendix B).

5.2.1 Relative Motion

The maximum relative movement at the joining ends of 40-foot modules in 3-foot storms is approximately 5 feet with anticipated maximum acceleration of 4.5 ft/sec^2, or equivalent to 15 percent of gravitation acceleration.

5.2.2 Loads

Forces on the connective members depend on the actual configuration of the connection system, the deck loads, sea conditions, and the operational procedures. The force assessment on a generic barge configuration is presented to get some idea of the likely magnitude of the forces transmitted through the connecting members. The loads have been processed assuming one connector 10 feet on either side of the centerline of the modules with connectors near the top and bottom of the modules. Forces in six degrees of freedom for two modules in an operational sea state are summarized in Table 5-1 to demonstrate the force variation with the change of wave headings.

Table 5-1. Significant Values of the Load Components
(At Interface - Two-Module Barge, Sea State 3.0)

Wave Direction (deg)	F_x (kips)	F_y (kips)	F_z (kips)	M_x (ft-kips)	M_y (ft-kips)	M_z (ft-kips)
0	2.10	3.90	0	0	0	240.0
15	2.05	3.60	0.45	25.0	18.0	230.0
30	1.92	2.80	0.78	48.0	38.0	200.0
45	1.71	1.90	0.95	65.0	62.0	153.0
60	1.36	0.91	1.28	70.0	92.0	94.0
75	0.74	0.21	2.20	55.0	133.0	32.0
90	0.18	0.11	2.60	13.4	160.0	5.1

It is quite obvious that these forces will increase as the length of a barge increases. At this early stage of conceptual development, the barge length is assumed to be three modules long.

The bending moment for the three-module barge occurs in the vertical plane along the barge length in a head sea condition, as shown in Table 5-2.

Table 5-2. Significant and Maximum Values of the Bending Moment (At Interface - Three-Module Barge)

Sea State	$H_{(sig)}$ (ft)	T_0 (peak per sec)	Wave Direction (deg)	Sig. $M_{(z)}$ (ft-kip)	Max.* $M_{(z)}$ (ft-kip)
2.5	3.0	5.0	0 **	5.08×10^2	10.16×10^2
2.5	3.0	5.0	30	4.64×10^2	9.28×10^2
5.0	10.0	8.9	0 **	10.7×10^2	21.4×10^2
5.0	10.0	8.9	30	8.96×10^2	17.92×10^2

* Approx., based on 2 x significant values.
** 0 degrees wave direction refers to head seas.
Results in the table are for the interface between the bow and center module in head seas which represent the worst case.

The worst moments occur in the survival state (sea state 5) and may reach 2,140 kip-ft. Shear forces are estimated roughly as the weight of a single module of about 70 kips. The recommended loading envelope for initial concept generation is a 2,500-kip-ft bending moment capacity and a 110-kip shear capacity at the joining face.

5.2.3 Tension on Warping Lines

For any connection system, there is a common requirement of bringing together the two modules to be joined. A standard practice is to winch them in by cable, similar to an ocean towing operation. The tension on the towing lines, which varies with the relative movement between the modules, ranges from a slack condition to an abrupt shock load of extreme intensity. During the process, it would appear that the most critical point would be when the barges approach each other, but are not yet in contact. It is here that the line could easily become slack and subsequently move apart to stretch the line suddenly and result in a high intensity snap load. This snap load may be avoided in either of the following ways: (1) apply a separation force to keep the line taut, or (2) use a softening mechanism such as a constant tension device to absorb the shock. The line tension anticipated during towing must be estimated even if only approximately before the concept generation can proceed. The analysis indicates that a minimum pretension of 10,000 pounds must be maintained on the towing line.

5.2.4 Summary of Motion and Load Analyses

It is recommended that the connection operation be conducted in open seaways with the long axis of the pontoon or barge string heading into the oncoming waves. The idea of using a delivery ship or other floating breakwaters is not favorable. The scenario with the long axis broadside to waves results in a maneuverability problem. It is clear that with the appreciable relative motion, a safe connection system should not require direct personnel involvement in the vicinity of the adjoining pontoon ends. Engagement and lock-in of the connection system should be automated. The connection procedure should start with a large separation between adjoining modules. The operation should not require transfer of personnel and equipment between modules during the process. The connection system should not require precise alignment or control of the modules.

Loads at the module interface (loads that must be resisted by connectors) are greatest in head seas and greatest for three-module barges. Analytical and intuitive reasoning indicate that the moment about a horizontal axis at the interface between modules is the stress component of primary concern. This moment produces the largest load component and is also the most difficult to resist by the structure. Maximum load occurs at frequencies near the operational seaway condition. The analysis indicates large dynamic loads on the warping lines used to bring the module together for connection. This condition requires a means to keep the warping line free from snap loads. The potential relative motions and forces when bringing the pontoons together effectively preclude any arrangement that involves projections of the joining faces of the pontoons. It does not allow opportunity for precise alignment, or tedious connection with small connection pins.

CHAPTER 6

ALTERNATIVE GENERATION

A series of concept generation processes achieved through a historical review of the existing connection systems, an in-house brainstorming session, and a Broad Agency Announcement (BAA) in the Commerce Business Daily have helped isolate the possible alternatives that may provide the desired capability. The selection process includes relevant commercial and military technologies as well as field experience. In order to exhaust all the possible sources, the process of soliciting information began initially with the sole guideline of connecting 40-foot pontoons in the water, and as such captured a wide variety of concepts ranging from basic seamanship methods, to systems that have been previously used or explored by the military or industry, to unique applications using advanced technology. The current effort, therefore, shall emphasize the search for innovative methods and technologies that have to date not been employed.

6.1 PRIMITIVE CONCEPTS

6.1.1 Current Systems

The existing connection systems have already been described in Chapter 3. These systems will join other innovative alternatives in the technology assessment process. Previous field experiences and lessons learned from the existing system serve as a good reference for comparison and evaluation among the primitive concepts.

6.1.2 In-House Brainstorming Session

One hundred and seven primitive concepts and relevant technologies were identified during the in-house brainstorming session. These concepts are illustrated in Appendix C. Although these concepts appear different in configuration, they may be grouped in a number of categories according to the primary mechanism used. In the following paragraphs, numbers in parentheses refer to the sketch number in Appendix C. Rather than attempt evaluation individually, these concepts are condensed into several representative categories, each named after the basic mechanism used. Sketches of these concepts are presented graphically. They are all considered workable, although requiring differing amounts of development of the relevant technology.

a. **Drop-In Connectors**: This concept is represented by dog-bone connectors (10 and 66). The connectors are in the form of pairs of vertical rods held apart with plates to form a “dog-bone” section. These connector rods are dropped down through connector fittings of the same shape as positioned along the vertical sides of the modules. The connectors carry tension and compression loads, while vertical shear loads at the interface must be carried by a separate

device. The connecting rods may be lifted and dropped into place from deck level. However, fittings on both modules must be held in perfect alignment to drop the connecting rods. This type of connector is used by RENDRAG modules. Variations are vertical lock pins (52) and Rhinohorn (19), etc.

b. **Projection-Recess Combinations**: This concept takes advantage of the barge shape to align the modules for connection and to resist the primary coupling loads after the connection is made. A typical commercial application can be found in the push tug and barge combination. Various possible arrangements have been proposed following this line of thought. Some are locked with horizontal pins (3, 5, 36, 37, 38, 51, 53, 58, 59, 88) and the others by vertical pins (2, 40, 80, 82, 89, 94, 23).

c. **Beam Connectors**: This is one of the most popular connection methods, and it employs a series of beam elements at the interfaces. The beam elements vary from steel angles welded to a string of modules (e.g., NL pontoons), stab pins locked into receptacles (e.g., Robishaw Flexifloat), and tension members locked by guillotines (e.g., NL Flexor connectors).

d. **Link Connectors**: The solid link connector (92) is essentially a beam that is hinge supported at both ends. The hinge supports at the ends may allow rotations about any of the three perpendicular axes to enable desired flexibility of the connection. Practical designs usually limit relative roll and yaw movements between barges for better steering control of the barge combination. Variations may incorporate a shock absorbing mechanism in the link (102) or a fender device between the module.

e. **Hinge Connectors**: Hinge connectors are equipped with a joint that is free to rotate at the interface. The joint may rotate in one or multiple directions, such as door hinges or universal joints. Hinge connectors restrain relative translations and hence maintain transverse alignment of the adjoining modules. A single hinge, which does not transfer bending moments, is suitable for flexible connection. The design may vary from that of a simple geometry such as the pipe shear connectors used on NL causeways, to padeye-link combinations similar to those used on P-5 and P-9 pontoons (79), to more sophisticated universal joints. A combination of hinges may be arranged to resist bending moments; this results in a rigid connection in the desired direction.

f. **Snap/Detente and Latch Connectors**: These mechanisms are usually found in small apparatus. The connection may be actuated by sliding a sleeve over the joint (62), by fitting a spring-loaded latch into a slot (29 and 24), by buckle joint of a seat belt (30), by railroad car couplers (11), or by rotating toggle bolts (31,16, and 86). This concept enables automation of the locking process during the final stage of connection.

g. **Strap and Ratchet Connectors**: These connectors include straps in use on cabinet doors (8), watch belts (70), or other utility ties (35). They may be used with a ratchet mechanism to ease the fastening.

h. **Wedge Connectors**: The concept uses an interlocking mechanism provided by two wedge-shaped blocks (67 and 83).

i. **Sphere Connector**: A sphere that is trapped in funnel-shaped recesses on the adjoining sides (18) is used to resist the shear forces. This concept seems to be workable in open sea.

j. **Pneumatic Connectors**: This concept uses an elastomeric member embedded with an internal bladder that can be inflated to develop friction against receptacle walls to actuate the connection (79).

k. **Tension Members**: Flexible members are versatile in seaways. Wires (22 and 45) and chains (72) may be used to bring together and hold the adjoining modules temporarily for further connection actions. More sophisticated tension member connectors, such as Flexor connectors (81, 85, 87) and pretension bar connectors (44), have been used in the existing systems.

l. **Adhesion Connectors**: The suction cup connector (34), Velcro connector (39), or magnetic connector (73) may provide a temporary connection for further connection processes.

m. **Assembling Facilities**: The connection may be processed with a dedicated assembly facility that is capable of eliminating the relative movement between the adjoining modules. Possible options include a floating mat (43), a portable drydock (60), a mooring system (71), a sloping barge anchor (68), a pile support/jack-up system (21, 63), and assembly in the water with ship cranes (54).

n. **Partially Preconnected Assembly Method**: Modules may be partially connected before launching (50). A similar concept is employed in the Ribbon Bridge System (105) developed by ConDiesel Mobile Equipment in Connecticut, USA.

6.1.3 Contractor Concepts

Approximately 30 additional ideas were provided by contractors in response to our BAA in FY93. A total of seven proposals were received. Generally speaking, the mechanisms and technologies used in these proposals had been explored already during the in-house brainstorming session. Similar mechanisms and technologies are used in various combinations to achieve the desired capability. Three of these submittals were selected for further study. The selection was made in accordance with the potential to accommodate the open seaway environment and to fit the general operation style of the U.S. Navy construction forces as well as the contractor's experience and expertise related to the task. Details of the ideas which were not funded are restricted for Government evaluation only. Disclosure in open publication is prohibited due to proprietary considerations. However, these concepts are either less likely to work in the open sea environment or are similar to the funded proposals or the results of in-house brainstorming. Omitting these concepts does not exclude any applicable technology. The concepts proposed by the selected submitters are summarized in the following paragraphs.

6.1.3.1 FBM Marine Concepts. FBM recommends 14 generic connection methods that cover a wide range of applicable technologies for consideration. These concepts are presented in Figures D-1 through D-14 of Appendix D, accompanied by brief notes to signify the highlights

of each concept. Most of these concepts are similar to those discussed in the in-house brainstorming session.

6.1.3.2 Western Instrument Corporation (WIC) Concepts. WIC presents two concepts that allow connections to be made in a progressive manner. These concepts will be referred as W-1 and W-2. The concepts include pull-in, alignment, fendering, and connection mechanisms. This procedure is very similar to the standard Navy practice for connecting NL causeway sections. In Concept W-1 (Figure 6-1), modules are brought together by towing lines. The modules in close proximity are protected with compliant bumpers, which are also used as alignment guides. The combination of towlines and bumpers keep the module aligned until rigid connectors are engaged and guillotines are safely locked. Concept W-2 (Figure 6-2) is an upgraded version of Concept W-1. The bumpers are replaced by an alignment cone on one module and a cone-shaped socket on the other as shown in the same figure.

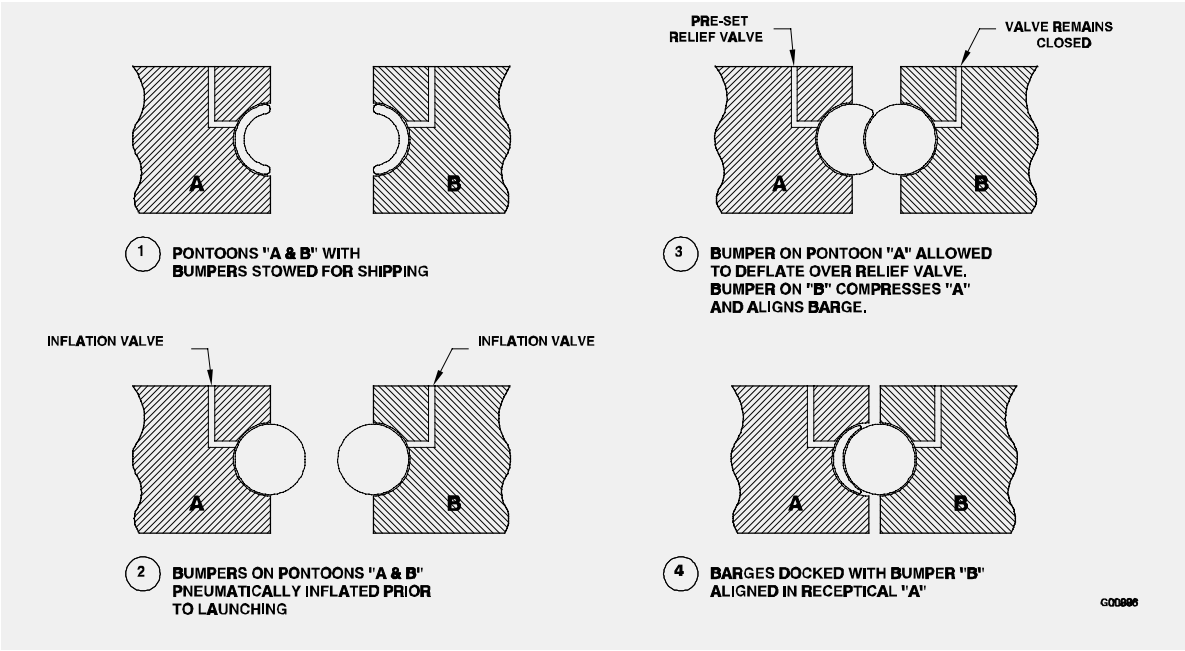

Figure 6-1. Concept W-1 - Properly designed pneumatic bumpers provide both compliance and alignment.

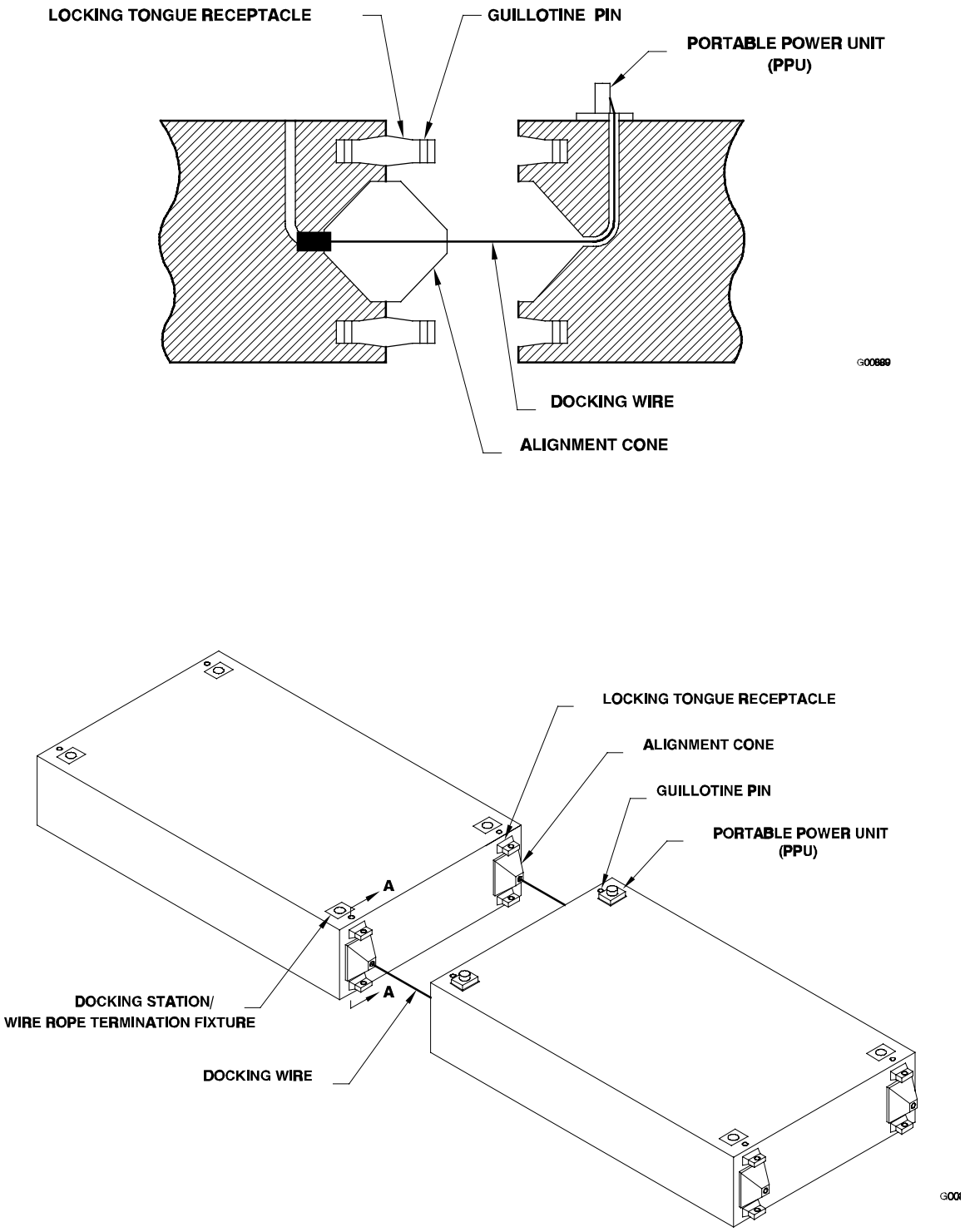

Figure 6-2. Barge alignment and docking system.

6.1.3.3 M.J. Plackett and Associates. Plackett and Associates proposes a unique connection method analogous to the beads-on-the-string process as a result of a BAA contract. Details of this concept are documented in Reference 5. This concept requires an integrated network of steel pipes running the length and breadth of each module as shown in Figure 6-3. The ends of the tubes are enlarged to form funnel-shaped receptacles. These pipes serve as an alignment system and receptacles to receive pin or sleeve connectors. Cables are prepositioned in the tubes. To bring the modules together, a tug is connected to the first module with a towing line to keep the module under control, Figure 6-4. Meanwhile, a separate pair of lines extending from the tug are loosely connected to the lines in the tubes of the first module. The second module is brought to the vicinity in rough alignment with the first. A second pair of lines, each threaded with a hollow sphere, is hooked to prepositioned lines at the adjoining ends of the other module. The tug then takes the string under tow heading into the oncoming waves. The drag forces imposed on the modules will keep all lines taut and force the modules aligned for connection. The towing line that controls the first module is gradually paid out, allowing the first module to slide on the cables toward the second like 'beads on a string.' As the gaps between modules decrease, the hollow spheres on the cables will be trapped into the funnel-shaped receptacles, Figure 6-5. These spheres will restrain the relative movements between modules and align the modules for installating permanent rigid connections.

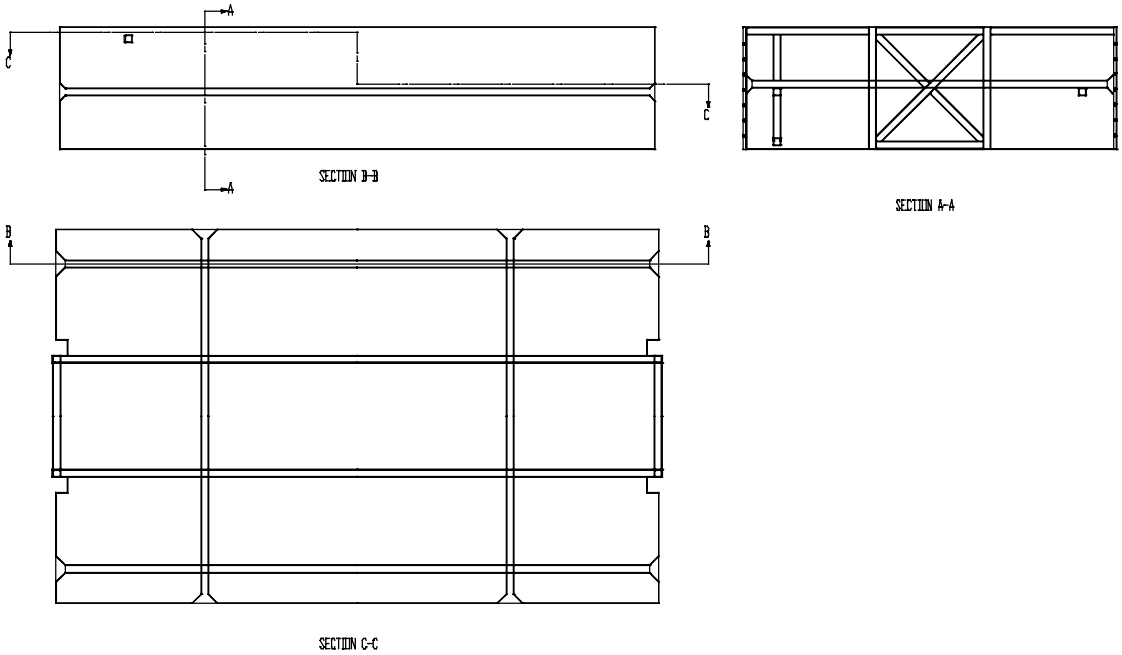

Figure 6-3. Network of internal pipe system of P&G concept.

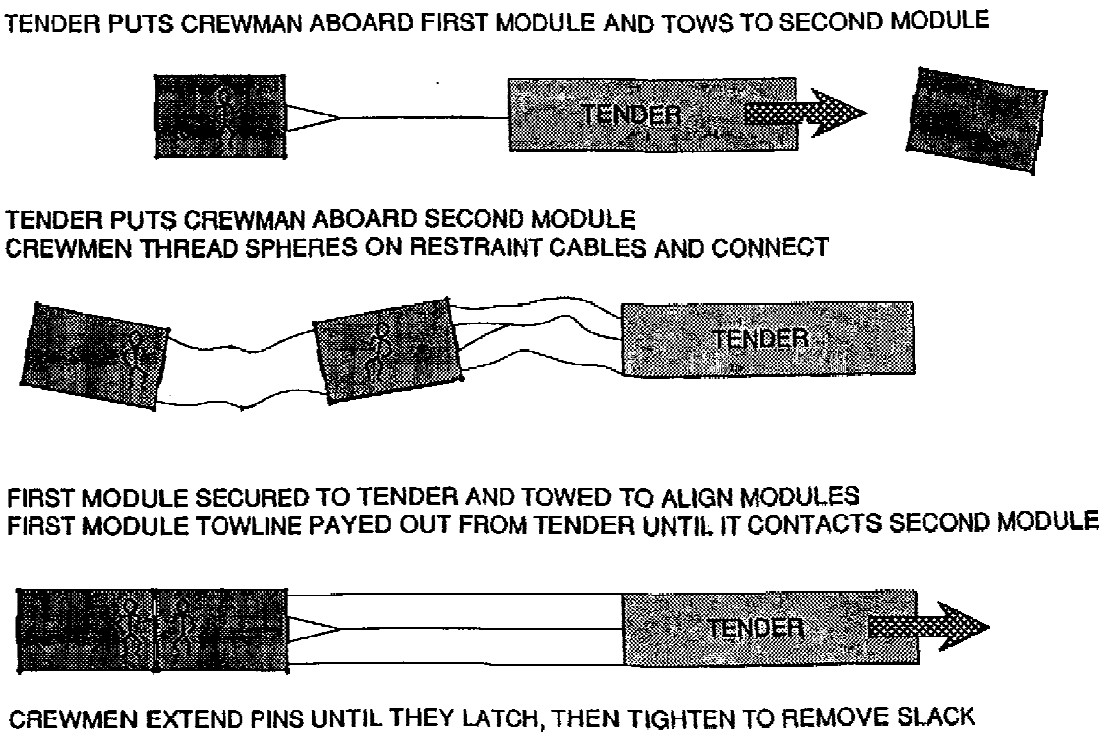

Figure 6-4. Tow forces provide restraint.

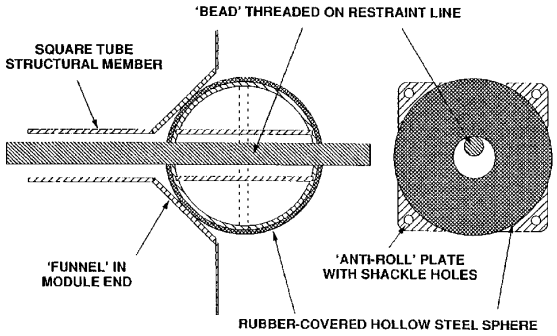

Figure 6-5. Sphere shear connector.

6.1.4 Lessons Learned

There are many possible methods of connecting floating pontoon modules together into large platforms. They are all considered workable and each has its functional merits. Since all the new concepts generated are primitive and their merits and importance heavily depend upon the follow-on development, it is difficult to establish a meaningful basis for comparison at this stage. However, it is clear that any feasible concept must at least be able to accommodate the open sea environment and be compatible with other floating Navy assets. None of these concepts alone meets these basic requirements without further development and indeed with the presence of large relative motion at the adjoining ends, the existing connection methods cannot be operated on the basis of safety issues alone. Nevertheless, the applicable merits and relevant technologies may be combined to formulate more comprehensive concepts for further study. Furthermore, this concept generation process has identified several essential functions of a practical connection system and outlined technology requirements for developing a safe, durable, and operable connection system. Although much effort is still required to make the concept realistic, a number of valuable lessons have been learned - lessons that serve as general guidelines for the future developmental effort. These lessons are:

a. Open sea connection can be done with the least effort in a multiphase procedure.

b. A connection procedure that requires the presence of delivery ships would prevent the ship from other critical missions.

c. Options that rely on a dedicated place for assembly will increase the logistic burden on the fleet and make the modular construction capability highly dependent on the arrival of particular delivery ships.

d. Nonpowered floating units must be moored or controlled by a tender boat.

e. Connection systems must include a method to bring the modules together in a controllable manner. Rigging shall be minimized and, if required, shall be as simple as possible.

f. Connection systems must include mechanisms to restrain relative motions at the connection faces to ensure a gentle initial contact. Alignment of components for connection must be automated.

g. The system must incorporate mechanisms to absorb motion-induced impact forces, such as collision forces between modules or the snap load on tension members.

h. The system requires an automated lock-in and release mechanism.

i. A connection system that includes rigid projections from the modules is prone to damage.

6.2 CONCEPT FORMULATION

6.2.1 Guidelines

It may be concluded from the foregoing discussion of concept generation that feasible alternatives appear to follow two basic approaches. The first is to use the best technology available for basic seamanship techniques to bring the modules together, reduce the relative motion as much as possible, hold them aligned, and then connect them. The second is to devise an assembly facility to accommodate the modules for connection. The first approach is more adaptable to Navy operations. The second approach seems to be more specific to the module size, type, and orientation and is less logistic, manpower, and cost effective. The connection procedure must comply with the random nature of seaways and, wherever possible, take advantage of the wave-induced motion to actuate the connection. Methods considered must not require personnel action or transfer of personnel and equipment across the adjoining ends during the connection process. The connection procedure must not require precise module maneuvering exceeding the standard practice of tug operation. Another fundamental to any connector system is the provision to maintain a flush box shaped module geometry compatible to ISO standards. Any projection from the geometry will either impair the suitability for transport by containerships or reduce the effective capacity of the module. This implies that the projection, if any, must be retractable for storage within the modules. A progressive connection method is perceived in a multiphase procedure as follows:

a. Connect the modules at a safe distance with cables.
b. Draw the modules together under control.
c. Restrain the relative motion and align the modules.
d. Install permanent connectors.

This sequence eliminates the relative motion between modules mode by mode in a progressive manner.

These recommended concepts show a great potential for meeting the following two minimum requirements: (a) bringing the adjoining ends of the modules together and forcing the alignment without breaking the connection lines or damaging the module hulls through mutual impact, and (b) allowing opportunity to install permanent connection members to resist the expected sea loads.

Three concepts of pull-in methods and seven connector concepts that at present appear to be the most feasible based on the prior operation are recommended for further consideration. These concepts represent the state-of-the-art technology regarding commercial and military pontoon systems. Four of them are pertinent to rigid connections while the others are pertinent to flexible connections. For convenience, the rigid concepts are designated as Concepts A to D and the flexible connections as Concepts E through G. Details of the selected concepts will be presented in Section 6.2.3.

6.2.2 Connection Procedure

The state-of-the-art method of rigid connection in the water may be demonstrated by the procedure to assemble Robishaw Flexifloat Modules as shown in Figure 6-6. The same procedure is also adopted by the military. This particular module uses connectors in the form

Figure 6-6. Flexilocks connect modules together.

of pairs of fixed pins along the top and bottom edges of one side and one end of each module and receptacles on the other side and end positioned at 45-inch intervals.

Modules to be connected are brought within a close proximity of each other with the aid of tender boats. The connector pins are fully extended prior to the actual connection. The modules are then pulled together by hand with ropes to align the connector pins with corresponding receptacles. Hand-held fenders may be placed between the adjoining faces to soften the collision impact, and are later removed prior to locating the pins into the receptacles. The pins are locked in place by hand-driven guillotines. This design uses a large number of small connector pins which require a precise alignment of all pins simultaneously to actuate the connection. This task is an obvious challenge in open waves.

A method similar to the recommended procedure for flexible connection of NL causeways, Figure 6-7, appears more practical. The same method may be used to bring the adjoining vessels together, regardless of rigid or flexible connections. With this procedure, the adjoining causeways are maneuvered into position at a safe separation distance by a tug boat on each module. The modules are then connected via a pair of cables. One end of these cables is attached to the connection member, which in this case is a Flexor connector. The other end is connected to warping lines that run from the winch on the leading tug through a special rigging arrangement (bridle marriage connection system) over the deck of the module it controls. The Flexor connectors are extended before the causeways are brought within a distance of possible collision against each other due to wave-induced motion. While the tugs run at constant throttle in opposite directions, the winch attached to the marriage bridle slowly pulls the modules together. The two tuggers pulling in the opposite direction keep the warping lines in tension to reduce the chance of allowing shock loads on the warping lines. In close proximity, these

warping lines tend to align the causeways and lead the Flexor connectors into the receptacle. Although Flexor connectors are not designed to resist the shear loads, field observations indicate that these Flexors effectively reduce the relative heave movement to allow a smooth engagement of the shear connectors. This procedure may be improved for use in the high sea state environments.

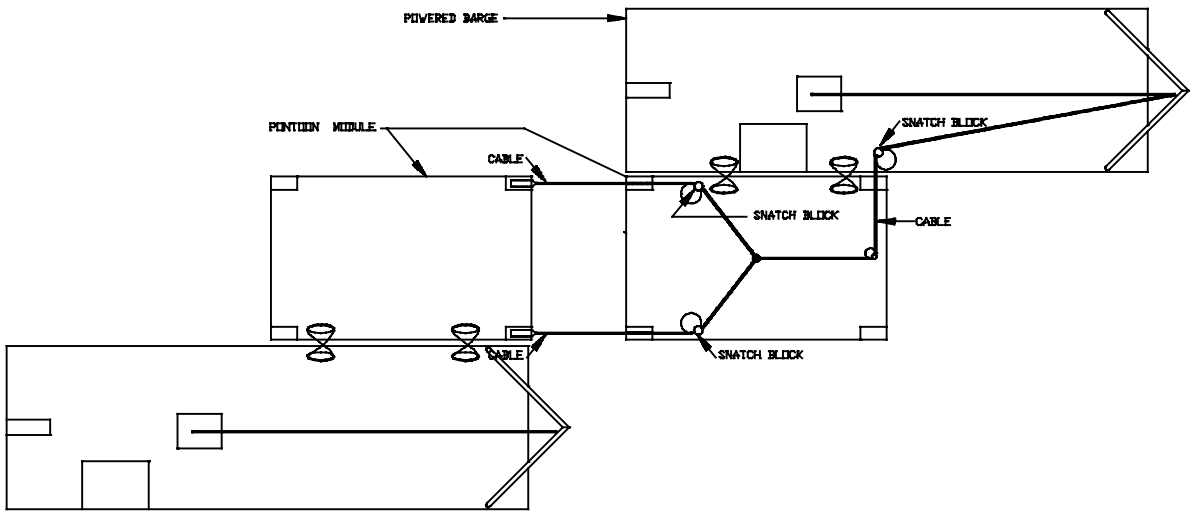

Figure 6-7. Pull-in method with marriage bridle system.

A third feasible alternative under consideration is the 'beads-on-the-string' procedure proposed by Plackett and Garrison. The procedure has been described in Section 6.1.3.

6.2.3 Structural Features

The preliminary structural arrangement of the seven recommended alternatives are described as follows:

Concept A. Figure 6-8 illustrates the general layout of the connection concept developed by Western Instrument Corporation under contract (Ref 4). This concept consists of rectangular modules with the following hardware: (a) an elastomer corner bumpering system that provides collision protection to the modules, (b) portable hydraulic deck winches that pull the modules together through hawsepipes located just below the centerline of each module, and (c) a retractable latching system that utilizes a worm gear linear actuator as the mechanical drive. The connection follows bumpering, pull-in, and latching steps.

The corner bumpers cover the full module height. These elastomer bumpers have virtually no maintenance requirements and no failure modes which would impede module connection. Figure 6-9 illustrates the two worst case impacts for the bumper when a corner of one module impacts the exposed face of an adjacent module, or when the horizontal edge of one module strikes the vertical edge of an adjacent module.

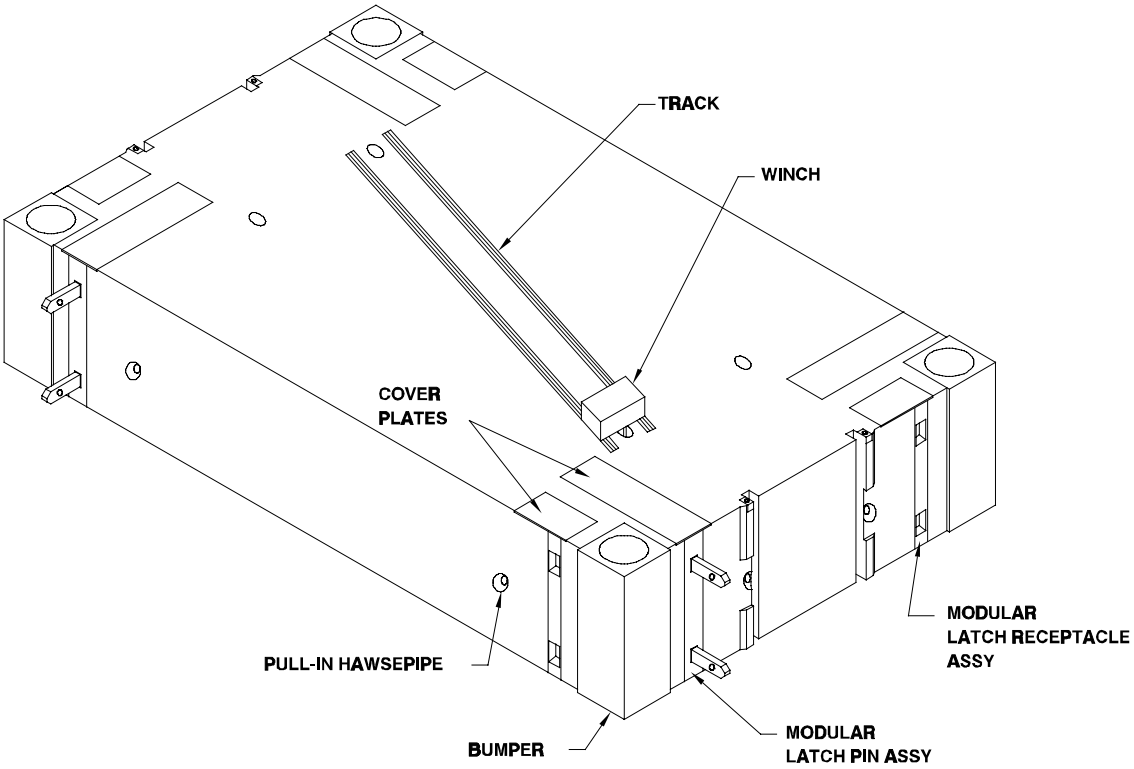

Figure 6-8. Layouts of the connection concept of Western Instrument Corporation (Concept A).

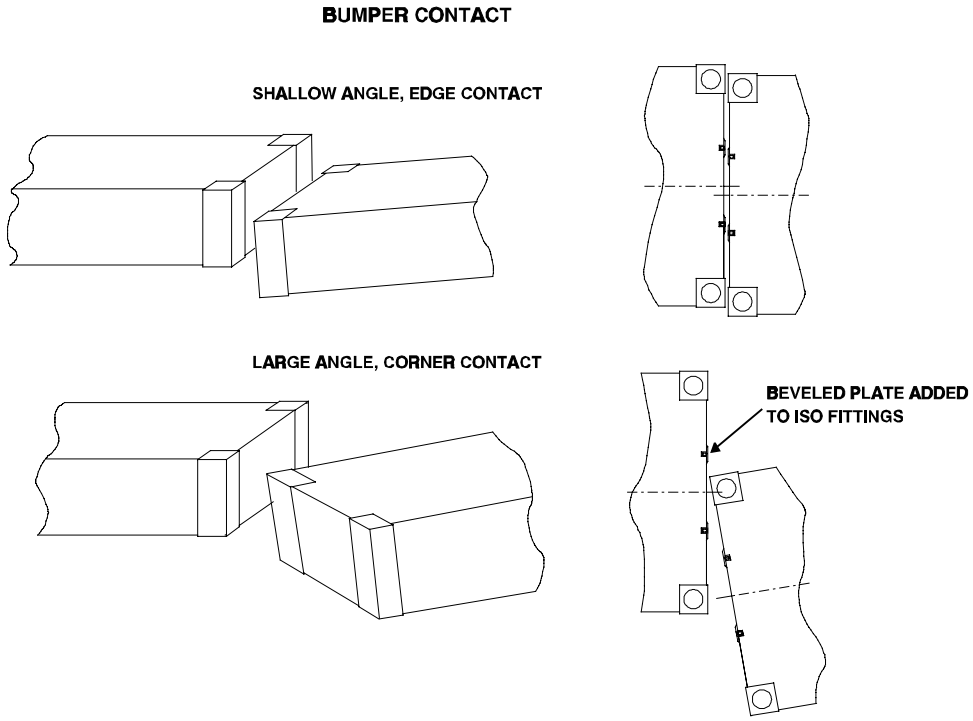

Figure 6-9. Worst case impacts for the bumper system.

The latches are made retractable for stowage during transit and to prevent damage before the modules are aligned for connection. The movement and locking of the latches can be actuated manually or with hydraulic cylinders as demonstrated in Figure 6-10. All operations are conducted from the deck.

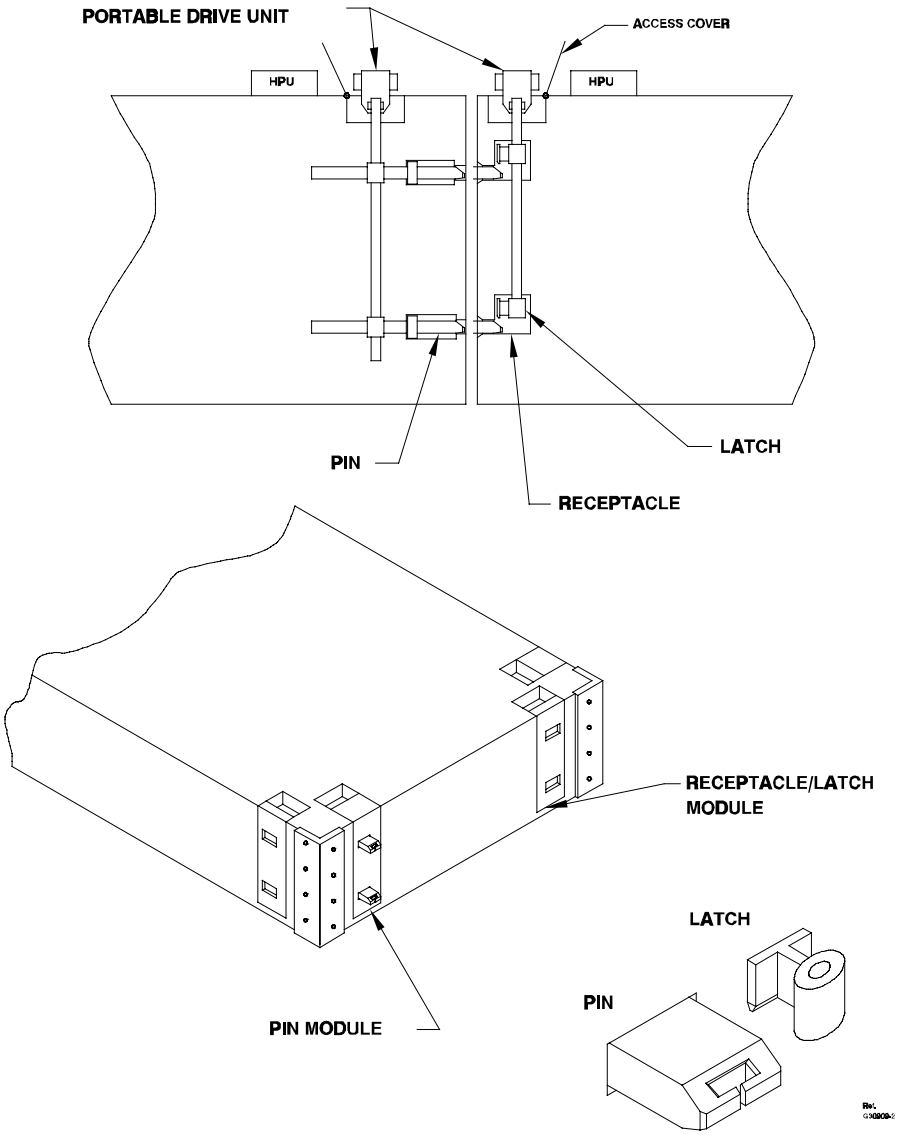

Figure 6-10. Concept of retractable latches.

Figure 6-11 shows the basic pull-in method. It consists of two warping lines, rigged between modules below their centerline, to pull the modules together. Two pulling devices, such as winches, are required per "pull-in" operation. The lines used to pull the modules together will increasingly restrict the relative motions between modules. Once pulled tight together, they will be roughly aligned for final latching.

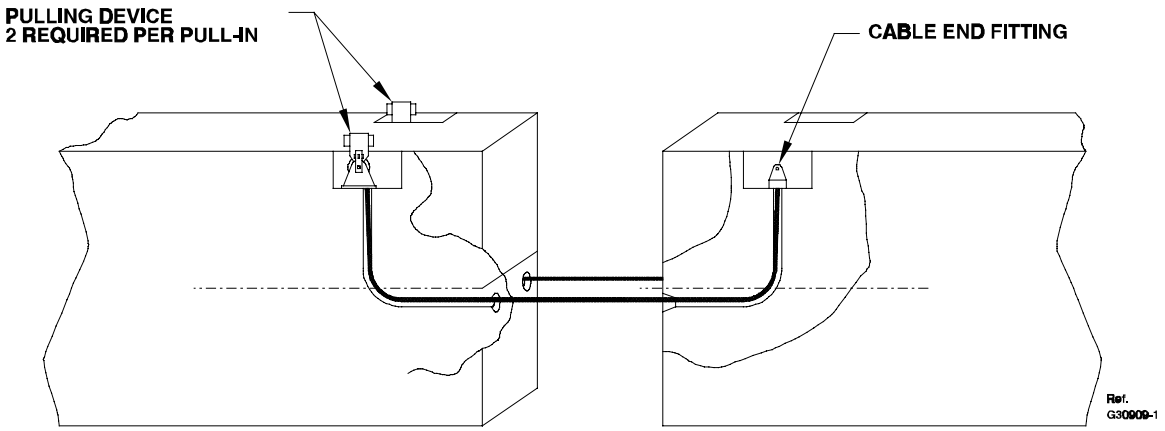

Figure 6-11. Basic pull-in concept.

The pull-in lines are terminated at a compliant deadman fitting as shown in Figure 6-12 to reduce the possible snap loads. Possible concepts for the compliant deadman are shown in Figure 6-13.

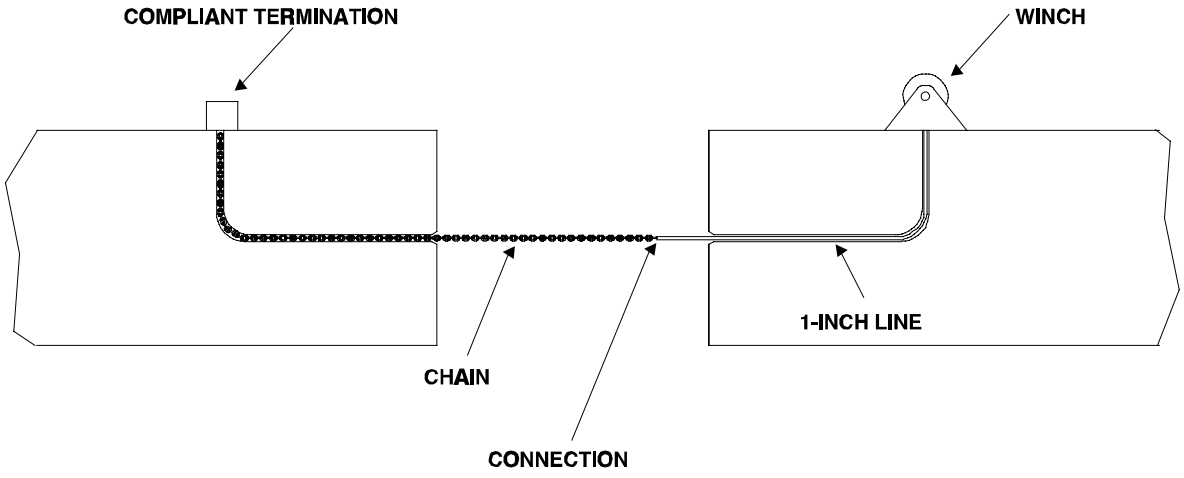

Figure 6-12. Pull-in assembly.

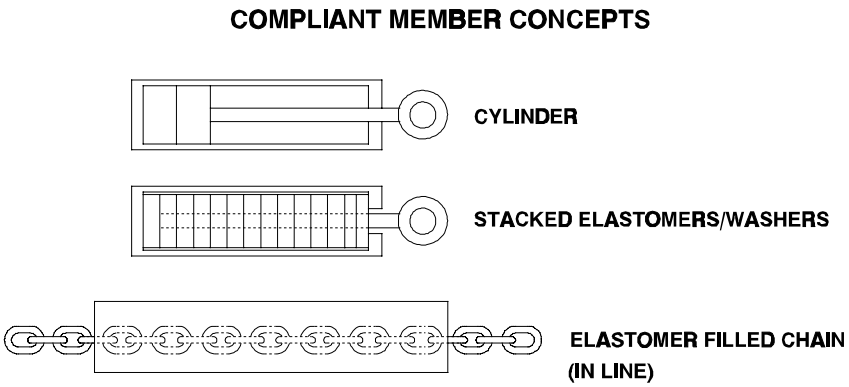

Figure 6-13. Compliant deadman concepts.

Once the modules are pulled together, the final connection is accomplished by the use of a simple 6-20retractable latch system as shown in Figure 6-10. The latch pins are driven into the adjacent receptacles with a power unit. Locking keys are then driven into the pins to lock the modules together.

Concept B. This concept is formulated primarily on the basis of M.J. Plackett and Associate's proposal (Ref 5). Structural layouts of this connection concept are illustrated in Figure 6-14. The components include a system of internal pipes with cables prepositioned inside, an inflatable fender system, a sphere alignment unit, and retractable pin connectors. In operation, the modules are brought into contact in a unique 'beads-on-the-string' procedure while taking the string of modules underway as described in Section 6.1.3. The towing lines will guide the sphere alignment assembly into a funnel-shaped trap at the end of pipe. The combination will maintain the modules in alignment for the final installation of the connector pins. Principal features of these components are summarized below.

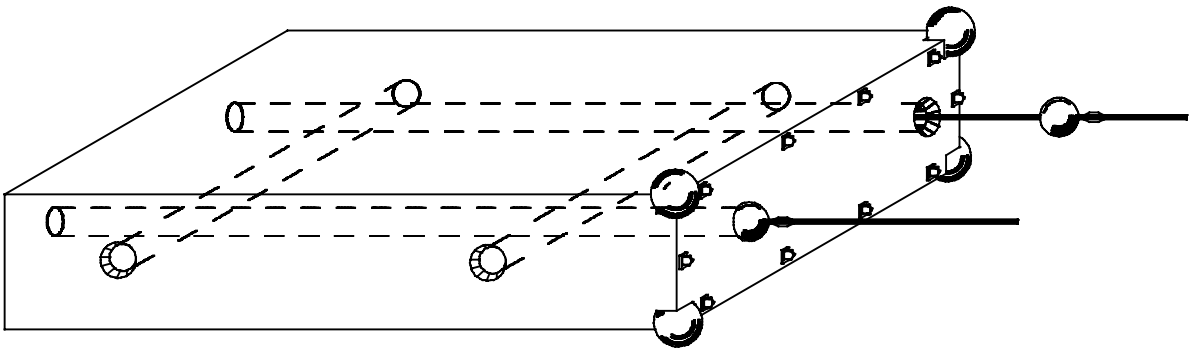

Figure 6-14. Connector layouts of the bead-on-the-string concept (Concept B).

Fenders are placed at the four corners of the adjoining faces to protect the modules from collision impacts. These fenders could be of various designs ranging from form fenders to inflatable fenders. A possible arrangement is shown in Figure 6-15.

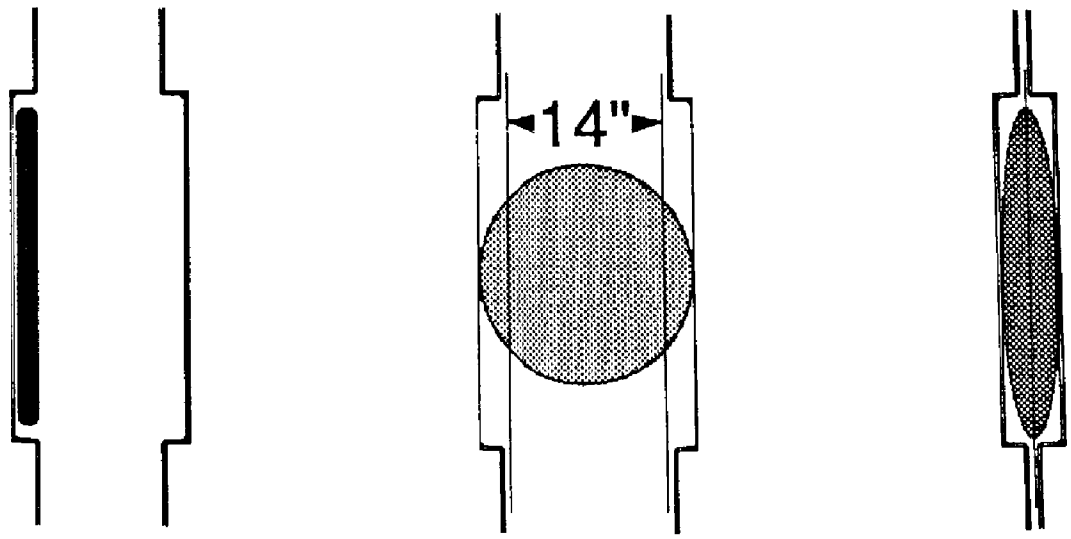

STOWED POSITION
DEFLATED

JUST TOUCHING
INFLATED

FULLY COMPRESSED
MAXIMUM PRESSURE

Figure 6-15. Inflatable fenders used to keep modules apart.

These fenders are stored in recesses in the modules and have to be inflated for deployment. When the fenders are inflated, they become almost spherical in shape and project outward from their recesses. As the modules are brought into contact, the fenders flatten and provide a progressively increasing contact area. As the fenders are flattened, their pressure increases. Overinflation is prevented by simple relief valves. Once the pin connectors have been inserted to resist the wave-induced loads, these fenders can be completely deflated and retracted into their recesses to eliminate further wear.

The sphere assembly actuates the initial alignment between modules and resists the shear forces temporarily to allow further connection actions. The sphere is fitted with two short stems on opposite sides, which are further attached to the end of cables contained in tubes as shown in Figure 6-16.

The cables are tensioned by winches to bring the modules together and guide the sphere into the corresponding trap when the gap is closed up. Once the pin connectors are in place, the sphere assembly may be locked with guillotines at the inboard ends of the stems (see Figure 3-20) to form a redundant rigid connection system.

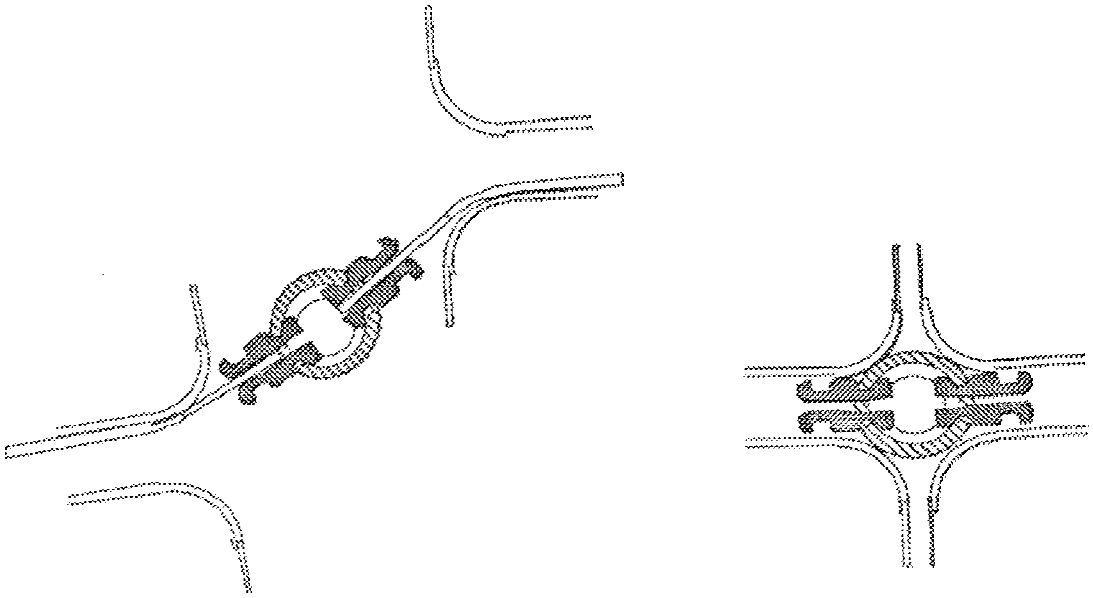

Figure 6-16. Sphere connectors align with receptables.

Details of the connector pins and operating components are shown in Figure 6-17. Connector pins are individually extended by means of a screw device on one end until a shouldered enlargement on the other enters its corresponding receptacle. As it enters the receptacle, its tapered nose pushes its locking guillotine upward, similar to a door latch which is pushed in as a door closes. When the shoulders of the pin pass beyond the guillotine, the guillotine drops down and automatically latches the pin in place. There will be at least 3 inches slack in the guillotine fittings to allow for up to 4 degrees difference in relative pitch angle. The other pins will be extended in turn until they too have latched in place. When all the pins have been latched the modules will be securely connected but will not necessarily be tight together or at the same trim. Once engaged, the connector pins can be progressively retracted by means of threaded collars (nuts) which are held captive in receptacles and are turned by worm screws. The outside of the nuts are threaded to match the worm screws. The worm screws are turned by vertical rods that are rotated from on deck. A nut is fitted to only one end of each connector pin and is always engaged. Adjustments to offset wear or change relative trim can be made at any time.

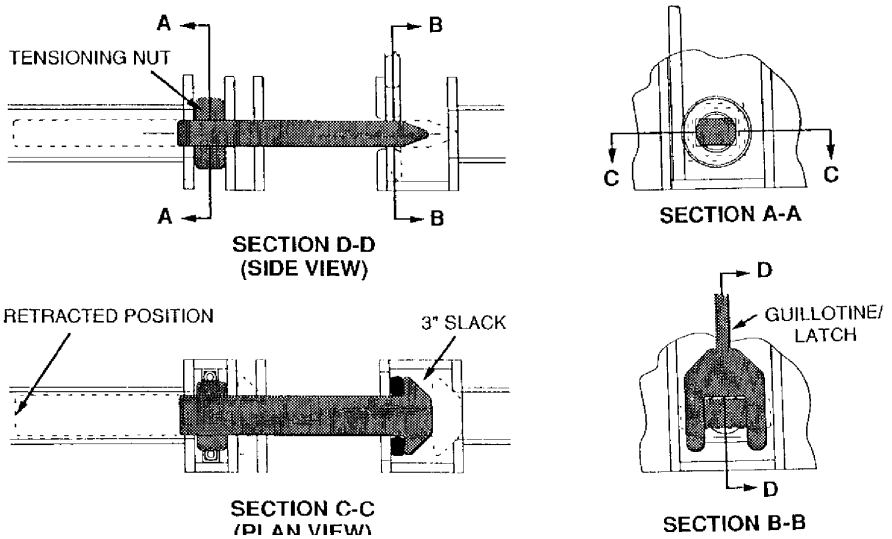

Figure 6-17. Connector pins and components.

Concept C. Concept C is presented as the recommended replacement technology. This concept of connection, shown in Figure 6-18, has evolved directly from prior experiences with the NL pontoon system, but also includes innovative procedures resulting from in-house development. The structural arrangement depicted in Figure 6-18 is expected to provide an equally reliable method as the current system of joining NL causeways. In this approach, installation procedures for rigid and flexible connections are nearly identical. Major components include corner fender, compliant alignment assembly, and spring-loaded large stab pins. The corner fenders are solid elastomer cylinders along the entire vertical edges of the adjoining faces. These fenders provide general protection to the modules from collisions at a sharp angle. The compliant alignment assembly is a low cost imitation of the NL Flexor. A feasible version consists of a short chain section partially molded with elastomers. The assembly is held at the inboard end and stored in the stowage housing for transport. In operation, the outboard ends of the alignment assembly will be connected to the warping lines and thereby pulled into the corresponding receptacle on the other module. At a short distance the alignment assembly could very well reduce the relative motion between modules. The stab pins are also retracted and stored within the module and can be extended shortly before connection begins. A fully extended pin will rest on a spring support to form a resilient member. The pins are the permanent load carrying member of the connection system. In case the pins do not find the receptacles at once

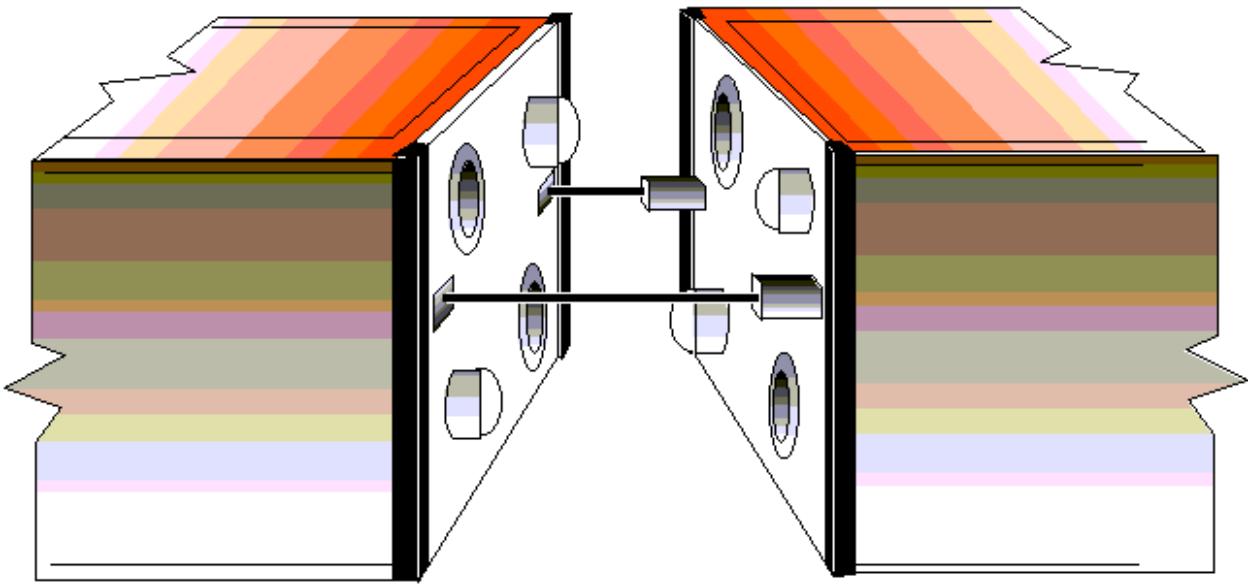

Figure 6-18. Structural layouts of in-house connection concept (Concept C).

due to the random movement between modules, they are likely to press against the end plate of the other module. The spring-loaded pins will retract to absorb the impact energy as a fender system before they are properly located in the receptacles. Therefore, this connection system does not require simultaneous alignment of all connector members at once. It works gradually and takes advantage of random wave-induced motion to find the mating receptacle by means of hit-or-miss action. Shallow funnels are equipped around the receptacles for the stab pins to assist in the location of the pins. No power unit is required on the adjoining modules. In operation, this concept uses a bridle marriage system that attaches to the ends of the compliant causeways to bring together the adjoining modules. In operation, modules will be attached to a tender boat as soon as they are launched from the delivery ship. The modules will be brought to open areas to avoid interference with other LOTS tasks. The adjoining modules will be brought approximately in line with each other at a safe separation to avoid collision due to wave-induced motion as shown in Figure 6-7. The modules will be gradually pulled in with marriage bridles. The marriage bridle is deployed on the module without Flexor assembly. The marriage bridle is connected to a winch wire, which is fairled to the center of one end of the adjacent causeway, outhauled down the length of the center string, and attached to a pair of 1-inch wire bridle legs. Stab pins are extended at this stage. The legs fork to opposite sides of the section through cleats and pass to the end of the trailing section. At a separation of 30 to 35 feet, the wire bridle allows each section to heave, pitch, sway, and yaw without too much resistance. The motion of one causeway is increasingly transferred to the other as the bridle is hauled in and the wires become shorter. Meanwhile, two messenger lines, which are connected to the ends of bridle legs, are passed to the other modules to transfer the bridle legs for connection with the Flexor assembly. As the separation decreases, the load on the bridle wire increases as the sections try to move in response to the waves. It is important that the deck officer be prepared to bring the

sections into full engagement as quickly as possible while being alert for any requirement to slack the wire and back off.

Concept D. The rigid connection methods by small stab pins and drop-in pins, such as those in use with the FLEXIFLOAT and RENDRAG modules, respectively, represent present techniques of rigid connection. Structure designs and operation methods of these connectors have been described in Section 3.1.3. With these methods, connections at adjoining faces must be made simultaneously, a feat that is very difficult to achieve in the open sea environment. The FLEXIFLOAT connection system will be included for comparitive purposes to represent the state-of-the-art method.

Concept E. The Universal End Connector Assembly currently in use on NL pontoon causeways is the only existing flexible connection system that has shown at least some open sea capability. This concept represents the status of the open sea connection technology and will serve as the baseline for the assessment of new technologies. This connection system uses Flexor tensile connectors to hold the causeway section together and a series of pipe connectors to resist the shear and the compressive loads. Details of the structure features are summarized in Appendix A. Although this system has a low sea state capability, there are several aspects of the system design that, at one time or another, affect the function and operation of the system. Much improvement is required to make the system operable in sea state 3 or higher.

Concept F. One potential problem with the Universal End Connector Assembly is the protrusion of the pipe shear connectors. The rigid pipe sections in severe motion tend to collide with each other or penetrate the barge hulls. A variation of the Flexor connector has been proposed to eliminate the pipe connectors so that the barges can be designed with flush ends. The new connector concept uses a flexural member and two short rigid members connected with ball joints as illustrated in Figure 6-19. The joint between two rigid members allows large rotations while the other joint is partially supported and allows only limited rotations. The entire link can be retracted and stored in a housing similar to the Flexor connector. The flexural member serves as an alignment tool and the two rigid members combine to replace the pipe connectors and resist shear forces. The inboard end of the flexural member is equipped with a railroad coupler that locks to the end of the receiver. The other end of the link can be locked with a guillotine.

For the purpose of transmitting compression force, a guillotine-type stopper can be provided at the inboard end of the middle rigid component. The stopper constrains inbound movement of the middle rigid component but not the outbound movement so as to complete the function of transmitting the axial forces. Designs of the component members can be of various forms. Existing Flexor connectors are a feasible alternative, although a more flexible member can be better compliant with the irregular movement between barges. Connection is made in a similar manner to the NL Univeral End Connector Assembly. The connector is held by a chain or wire at the inboard end and attached to the bridle leg at the outboard end. It is pulled out by the bridle. Before the middle rigid member is completely pulled out of the housing, the flexural member acts like a Flexor and gradually constrains the relative movement between modules. The middle member is then pulled into position in the receiver. At this moment, the guillotines are locked in place to hold the connector link.

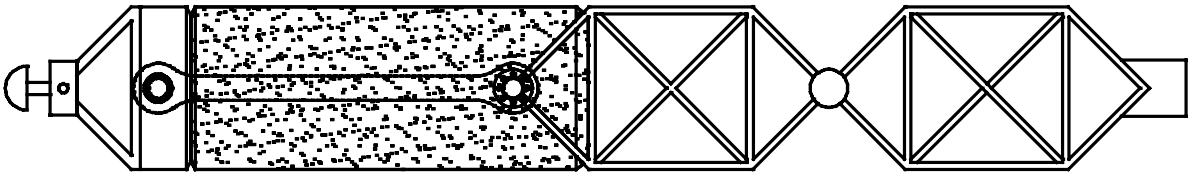

Figure 6-19. Concept F - new flexible connector.

Concept G. WIC proposed a hinged module to limit the connection bending capacity requirement. The hinged modules can be the same size and installed with the same equipment as the regular modules. With hinged modules, on-site barge construction is reduced to rigid connection only. However, the hinged modules connected with simple pin joints are not suitable for lifting by a standard ISO strongback because the module will tend to buckle under its own weight at the hinge joints. Two concepts are shown in Figures 6-20 and 6-21 to address this requirement. The first concept simply adds a tension member to restrict the ability of the module center to fall. This is shown as a wire rope through the pull-in hawsepipes. Once the module is set in the water and the strongback removed, a quick release can be actuated to free the module hinge. The disadvantage to this concept is that the wire rope only works in tension and may be subject to snaploading until the quick release is actuated. The second concept is to fold the two halves back to back similar to that shown by Figure 6-21. The hinge joints must be designed to allow the desired folding, and significant efforts may be required to prepare the hinged modules for offloading.

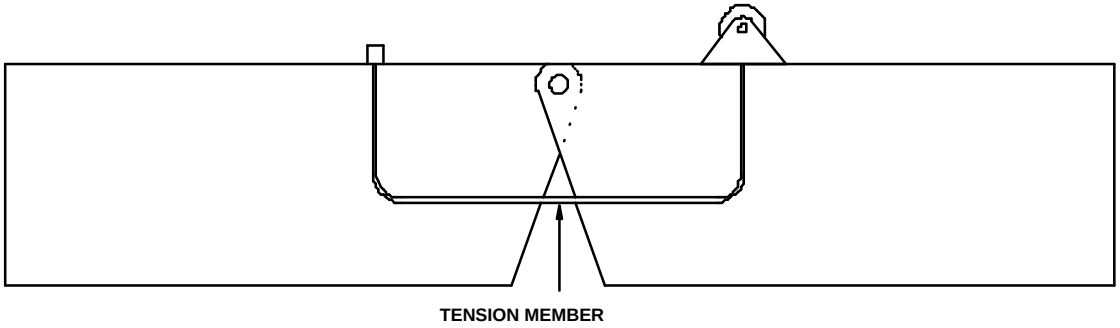

Figure 6-20. Concept G - hinged modules.

Figure 6-21. Concept of folding modules.

6.3 EVALUATION OF THE ALTERNATIVES

6.3.1 Criteria for Concept Selection

Feasible concepts were evaluated for their potential, reliability, compatibility, ease of handling, ease of maintenance, pontoon implication, and development cost. These parameters are intended to reflect the following aspects:

PARAMETERS	COMMENTS
Potential	The potential of a concept to meet the functional criteria set forth in Section 2, primarily, the capability of being installable in sea state 3 and survival in sea state 5.
Reliability	Robustness of mechanisms in use. Level of maneuver precision. Requirements of special skill, equipment and facility. Operability in hostile weather or operational environment. Level of coordination between components of connection system.
Compatibility	Compatibility to the operation concept and assets of the Navy.
Pontoon Implication	Impacts to the pontoon design that may impair the pontoon system for wide applications and rapid ocean transport.
Ease of Handling	Simplicity in design and operation methods. Number and weight of parts. Level and type of personnel efforts. Safety of crew members.
Ease of Maintenance	Level and frequency of the maintenance. Accessibility to the connector's maintenance and repair.
Damage Tolerance	Liability to damage and the consequence of failure.
Cost	Development and procurement costs of the system.

6.3.2 Concept Scoring

Due to the lack of quantitative data at this stage, these concepts were evaluated on a consensus of engineering judgement based primarily on NFESC's previous experience with the NL pontoon system. Scores are always from 0 to 5; the higher the score the better. The concepts are scored on a relative sense within the respective categories. A weighing factor is assigned to each of the score factors depending on the significance of the factor to the connection operation and the availability of the information. It is considered that some of the aspects tabulated for each

concept are more important than others. So far the first four factors are given twice the weight of the others because they are either more closely relevant to the system requirements or represent the technology deficiencies to date. The last four factors will not become issues until the first four are met. These weighing factors are multiplied by each concept score to provide the weighted totals for the concepts.

Since any of the recommended procedures for bringing the modules together can be used along with any of the recommended connectors, the procedures and connectors will be evaluated separately. The results of the evalutation are presented in Tables 6-1 to 6-3.

6.3.3 Results of Evaluation

Favorable alternatives were selected according to the total score. The outcomes based on weighted and unweighted scores were identical. The results of the pull-in procedure and the rigid connection method were conclusive, while the flexible connection method was somewhat obscure.

6.3.3.1 Pull-In Procedure. The pull-in procedure that uses the marriage bridle system is by far the most practical. The beads-on-the-string method also has potential in open seas, but is much less reliable due to the requirements of extensive rigging and rather high speed towing in order to align the modules for connection. The methods currently used to connect commercial modules are heavily manpower intensive and are extremely difficult, if impossible, to accommodate in open seas. The manual method in use with Flexifloat modules is unlikely to be maneuverable in rough seaways.

6.3.3.2 Rigid Connection. Concept C turns out to be the most favorable rigid connection system. Its connector components are well adapted to the random motion of the modules in seaways. The connection takes place under the random motions of modules without the requirement of precise alignment of all matching components simultaneously. Concept A comes in second with a decisive margin over Concepts B and D. Concept A, as is, appears to be less reliable in the mechanism of module maneuvering, pull-in, and impact load absorption. However, these deficiencies may be engineered with reasonable effort. Concept B inherits a number of formidable drawbacks from the pull-in mechanism in use. Modules under tow are likely to swing from side to side. The chance of aligning the two funnel shaped recesses on the adjoining surfaces to trap the sphere connection is rather slim, let alone the possibility of holding the module steady for rigid connection. Meanwhile, the sphere alone is insufficient to protect the modules from collision damage. Concept D is simply impossible in open seaways.

6.3.3.3 Flexible Connection. The scores of the three alternatives for flexible connection are too close to discriminate the concepts. No clear decision can be made at present. Concept E with its proven low sea state capability seems to have a slight edge over Concept F. However, the projection of pipe connectors is an obvious hazard in the open sea environment. The practical solution is likely the combination of these concepts. Concept G also has a reasonable chance, if the hinged modules can be fitted to container cells of the delivery ship and can be launched by ship cranes.

Table 6-1. Evaluation of the Recommended Connection Method

Factors	Weight	Manual Method		Marriage Bridle Method		Beads-On-The-String Method	
		Unweighted	Weighted	Unweighted	Weighted	Unweighted	Weighted
Potential	2	1	2	5	10	4	8
Reliability	2	2	4	4	8	3	6
Compat-ibility	2	4	8	4	8	2	4
Pontoon Implication	2	5	10	5	10	5	10
Handling	1	3	3	4	4	3	3
Mainte-nance	1	4	4	4	4	3	3
Damage Tolerance	1	2	2	4	4	3	3
Cost	1	5	5	3	3	3	3
Total Score	-		38		51		40

Table 6-2. Evaluation of the Recommended Rigid Connection System

Factors	Weight	Concept A		Concept B		Concept C		Concept D	
		U[a]	W[b]	U[a]	W[b]	U[a]	W[b]	U[a]	W[b]
Potential	2	4	8	3	6	5	10	0	0
Reliability	2	3	6	3	6	5	10	0	0
Compatibility	2	4	8	4	8	5	10	4	8
Pontoon Implication	2	5	10	2	4	5	10	5	10
Ease of Handling	1	3	3	3	3	5	5	1	1
Ease of Maintenance	1	4	4	3	3	4	4	5	5
Damage Tolerance	1	3	3	3	3	4	4	2	2
Cost	1	4	4	3	3	4	4	5	5
Total Score	-		46		36		57		31

[a]U = unweighted.
[b]W = weighted.

Table 6-3. Evaluation of the Recommended Flexible Connection System

Factors	Weight	Concept E		Concept F		Concept G	
		Unweighted	Weighted	Unweighted	Weighted	Unweighted	Weighted
Potential	2	5	10	5	10	5	10
Reliability	2	4	8	4	8	5	10
Compat-ibility	2	5	10	5	10	3	6
Pontoon Implication	2	4	8	5	10	3	6
Handling	1	5	5	5	5	2	2
Mainte-nance	1	5	5	3	3	4	4
Damage Tolerance	1	5	5	4	4	5	5
Cost	1	5	5	4	4	5	5
Total Score	-		56		54		48

6.4 RECOMMENDED CONCEPT

A conceptual connection system is recommended for further development, as supported by the outcome of system evaluation presented in Section 6.3. The recommended connection system features primarily the in-house concepts in conjunction with lessons learned from the contractual efforts. This system presents a high potential to meet the requirements specified in Section 2 of this report. Most components required by the emerging technology are already in use in existing systems, and will therefore require little additional research and development. The connection is performed in a progressive manner under sure control of tender boats during the entire process. Both rigid and flexible connections are made in an identical manner to the standard procedure in use with the NL pontoon causeways. Only the load taking connector components are different to achieve their respective functions. The connection may be conducted by crew members of basic seamanship skill level with a variety of tender boats. This flexibility may be critical to the operation plan.

The recommended concept includes a rigging system that gradually brings the modules together and aligns them for connection with a set of unique spring-loaded stab pins, which provide a dual function of buffering and connection between adjoining surfaces. The lock-in of the connectors may be automated. Little personal action is required other than coordinating tender boats to engage the connectors. This arrangement is especially suitable for open sea operations. Features of the recommended system are presented in the following paragraphs.

6.4.1 Connection Procedure

The recommended barge construction process begins the moment that modules are launched from the delivery ship. A tug meets the module at the ship side taking over control of the modules and tows it to an open site for further connection as illustrated by Figure 6-22. A pair of these tug and module combinations are brought together at roughly a 40-foot separation. Messenger lines are passed between the modules to lead the marriage bridle legs for initial connection. The tugs then pull the modules away from each other to establish and keep a reasonable pretension on the bridle legs to avoid possible snap loads. In the meantime, the winch gradually rewinds the marriage bridle legs and leads the deadman into the receivers. At a short separation distance, the chain sections will roughly align the adjoining ends and substantially reduce the relative heaves between the modules. The spring-loaded stab pins are extended before this moment. Further retraction in the bridle legs closes up the gap and the stab pins are likely to land on the side wall of the adjoining modules if they do not find their respective matching receivers. In this case, the spring-loaded pins work as bumpers to protect the modules. At this moment, the pins undergo random motion and eventually find the shallow funnel access around the receivers and slide into the receivers. This process, which does not require precise alignment of all connecting members simultaneously, has a much better chance to work in the open seaways. Two equally feasible methods of connecting the tug to the module are under consideration. The first method, with the module tied alongside of the tug (Figure 6-23), is the current fleet operation method (the reason being better maneuverability). The second method connects the tug with the module end to end (Figure 6-24) and may be accomplished with less risk in high sea states. Both methods will be further evaluated experimentally.

The barge connection procedure is identical except that the load resisting connectors are in line with the alignment members. Since the barges are usually tapered at the ends, there is little room for incorporating permanent bumpers. Hanging foam fenders over the edge of the barges is a simple and straightforward means of protecting barges from collision impacts between the adjoining ends.

A feasible connection concept must incorporate the means for disconnecting the modules in the same seaway condition in which they were initially connected. This requires that the automatic locking device be capable of reversing the process and disengaging the latch connectors.

6.4.2 Rigid Connectors

The rigid connection system includes a set of spring-loaded stab pins and receivers, a pair of elastomer molded chain sections that are attached to the end of towing lines, and elastomer corner fenders. Small scale models of pontoon modules were built to demonstrate the principal features of the recommended rigid connection system (Figure 6-25).

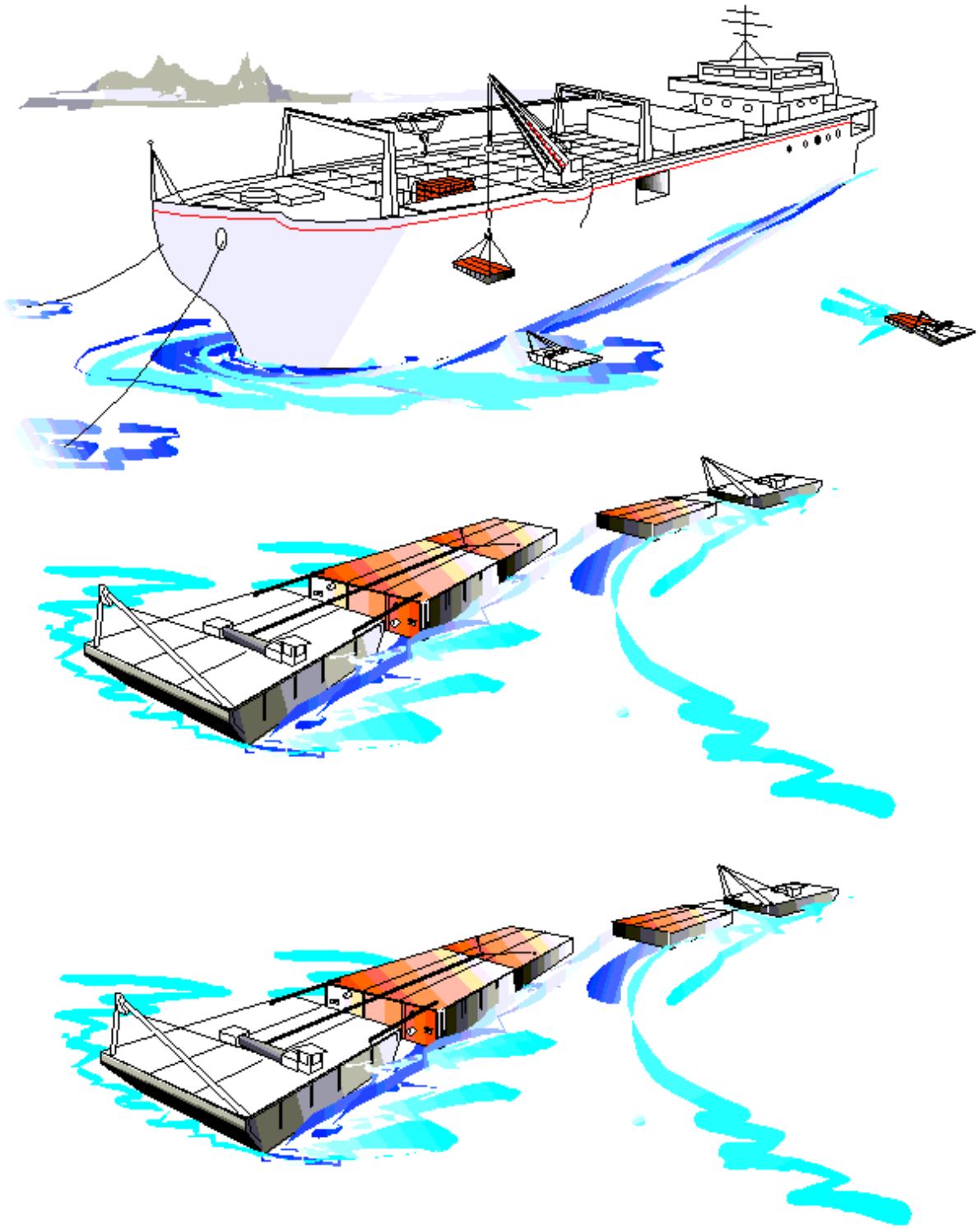

Figure 6-22. Scenario of open sea modular construction method.

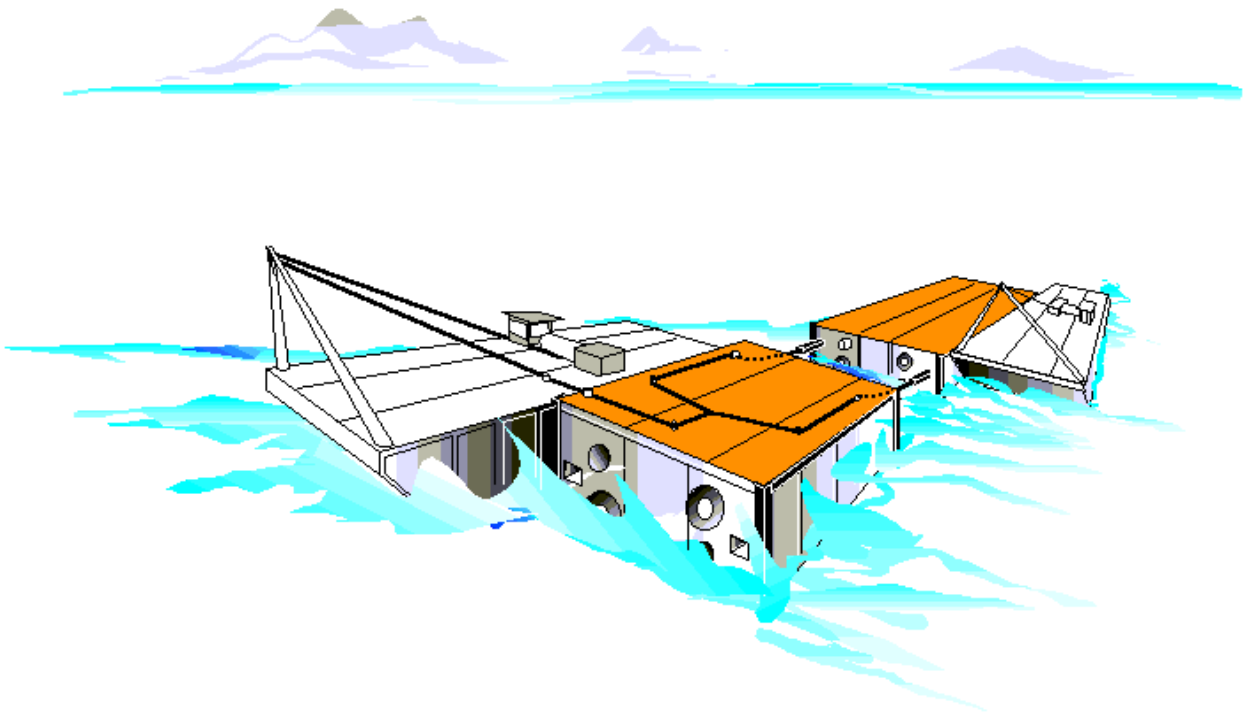

Figure 6-23. Sidetow configuration

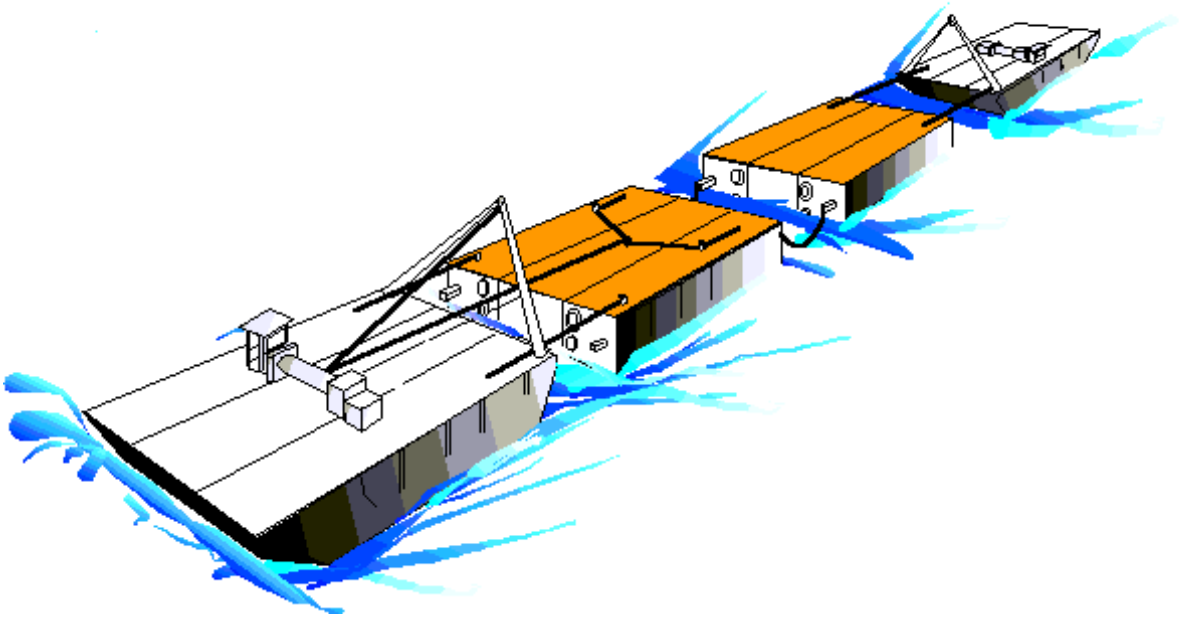

Figure 6-24. In-line towing configuration.

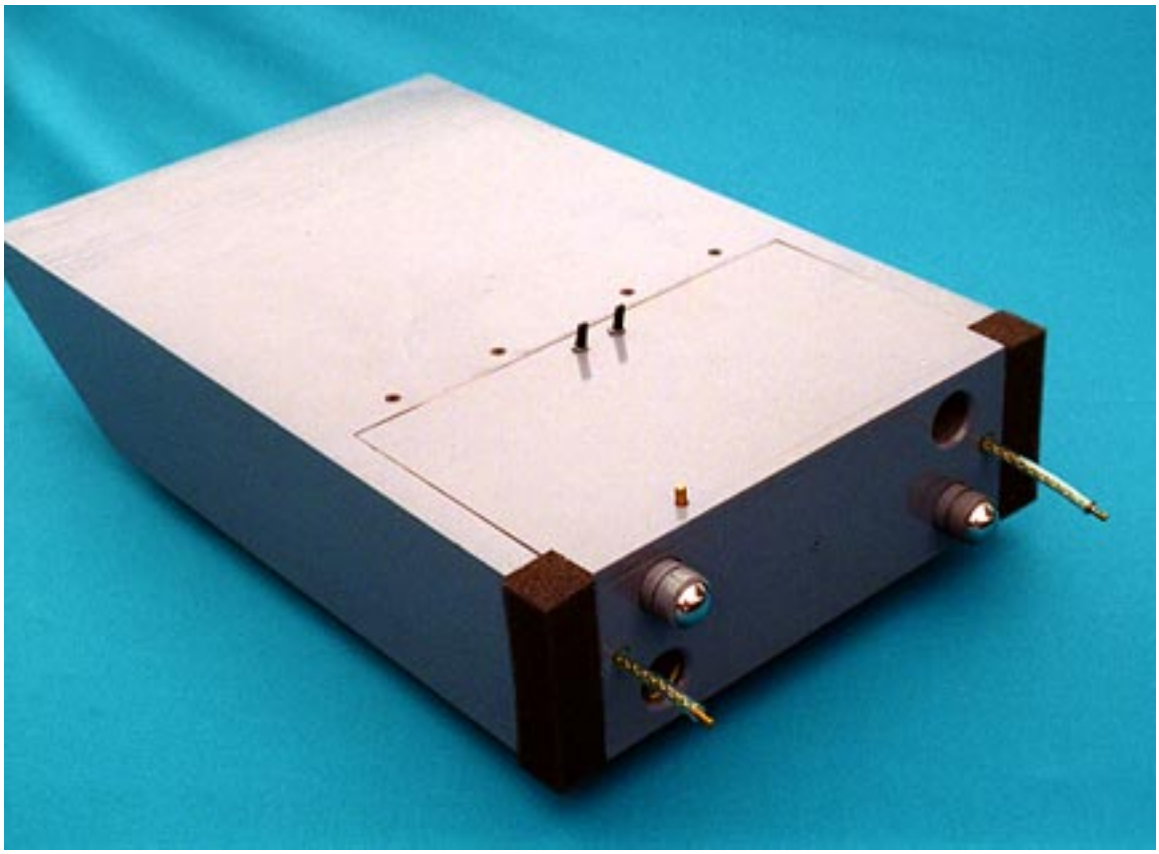

Figure 6-25. Scale model of the recommended rigid connection system.

6.4.2.1 Spring-Loaded Stab Pins. Two large diameter stab pins are located on the interface at the opposite corners and two receptacles are at the other corners. Identical arrangements are located on the other pontoon. These pins are retractable for shipping and should be extended before modules are within a distance of possible collision. The funnel-shaped surface (not shown in the model due to the small scale) around the receptacle tends to guide the stab pins into the receptacle under wave-induced motion. These pins are spring loaded. In case the pins do not find the receptacles, they will be pressed against the vertical surfaces and act as a fender system to protect the modules as well as the pins as shown in Figure 6-26.

6.4.2.2 Elastomer Molded Chain Section. A section of chain molded in elastomers is attached to the towing line at the outboard end and is loosely connected to the bottom of the stowage housing at the inboard end (Figure 6-27). The chain section will be partially extended from the stowage housing by the towing line and guided into the matching receptacle for temporary alignment of the modules. The chain section can substantially reduce relative motion between modules, while also being sufficiently flexible to accommodate bending.

6.4.2.3 Elastomer Fenders. A pair of elastomer fenders (Figure 6-28) are located at the vertical edges to protect the sharp corners.

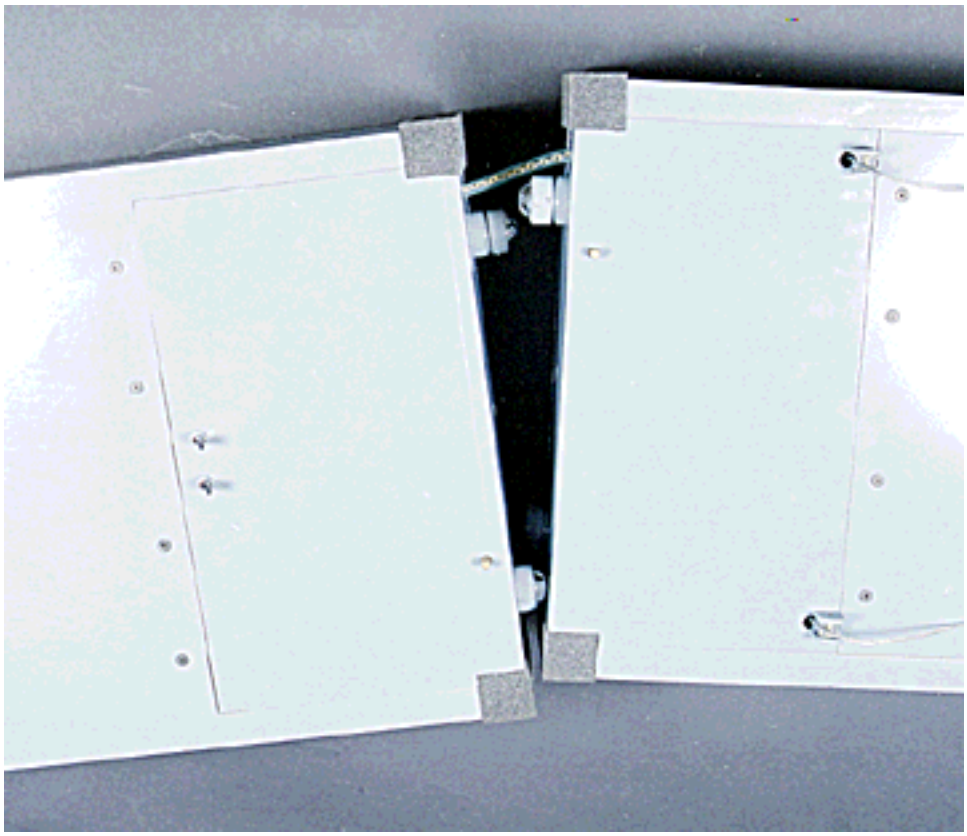

Figure 6-26. Spring-loaded stab pins work as fenders.

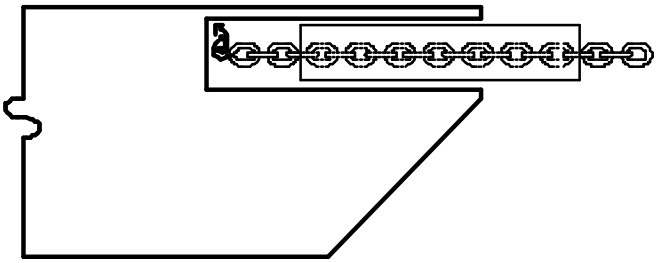

Figure 6-27. Chain Section.

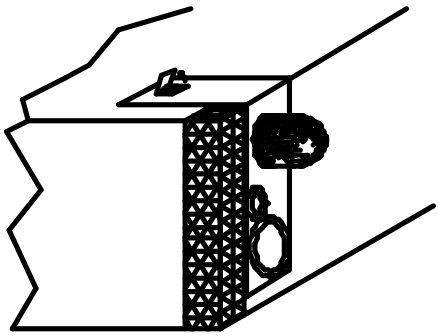

Figure 6-28. Corner Fender.

The connector components may be integrated into a compact module as illustrated in Figure 6-29. The entire module may be raised to deck level for maintanance, repairs, or replacement. The modules on the port and starboard sides are identical copies of opposite orientation. Only one type of module has to be maintained for replacement.

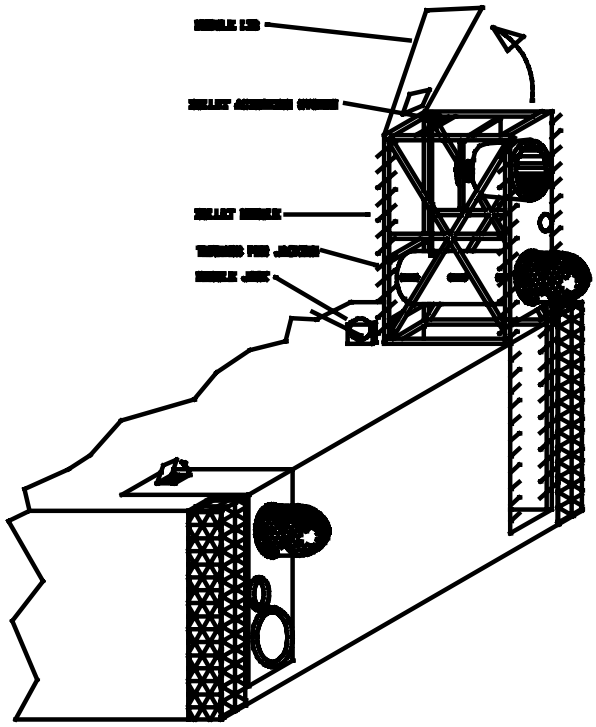

Figure 6-29. Replaceable connector modules.

6.4.3 Flexible Connectors

The recommended flexible connector is a combination of the NL Flexor with a hinge mechanism, Figure 6-30. The flexible portion of the new Flexor is expected to accommodate the large relative motion between the barge at the initial stage of the connection and form a smooth transition to lead the rigid portion into the receptacle. Once the rigid section is enaged, the connector performs like a door hinge. This process is illustrated in Figure 6-31. The arrangement eliminates the need of the pipe shear connectors in use with the existing NL Universal End Connectors.

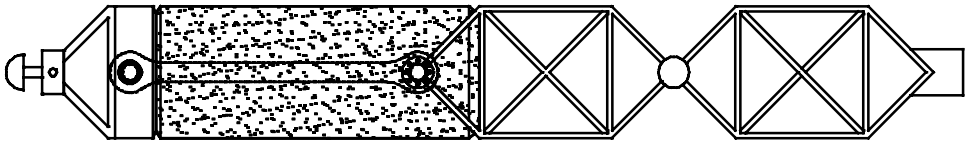

Figure 6-30. New flexible connector.

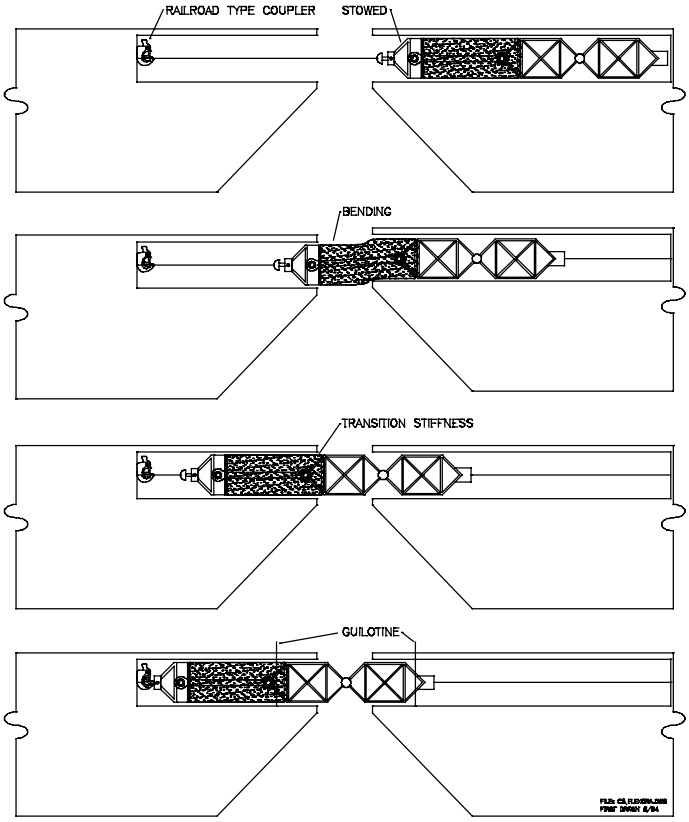

Figure 6-31. Procedure of flexible connection.

6.4.4 Issues

The recommended connection concepts are simple and straightforward and hence are expected to be highly reliable. There are a number of crucial techniques implied in this concept that have no prior high sea state evaluation, such as the marriage bridle system, the spring-loaded stab pins as shock absorbers, and the molded chain sections as alignment apparatus. The effectiveness of these techniques has to be established before any further development of the concept can be seriously considered. Meanwhile, the contingent nature of military operations taking place within a narrow weather window, and the wide variation in the skill level of the crew members, could ultimately dominate the design of connection systems. Factors that need to be addressed and resolved include the following:

- Automation versus complexity
- Materials
- Warping line capability
- Equipment and hand tools
- Crew safety

CHAPTER 7

AT-SEA TESTS

One of the critical issues of open sea pontoon connection is the ability to bring together the adjoining modules. The recommended pull-in procedure uses a rigging method similar to the Flexor marriage bridle system cited in the NAVFAC P-401 Pontoon Manual (Ref 1), which in spite of many merits for open sea application, has been used seldom in the past, except on a few occassions in calm waters during training purposes. The actual open sea capability has never been demonstrated.

An at-sea test was conducted in early 1994 to investigate the claimed merits and quantify the open sea capability of this pull-in procedure. Demonstrations of the system were conducted during the week of 10 to 14 January 1994 in conjunction with Amphibious Construction Battalion One (PHIBCB-ONE), Naval Amphibious Base (NAB) Coronado, California. The tests consisted of two phases that compared existing methods and equipment against proposed improvements. The Coronado demonstrations revealed a number of hardware and operational items that could be modified on existing NL causeways for consideration in developing the next generation of lighterage. An attempt to verify the ability to connect Flexors in a 3.5-foot sea was unsuccessful because of an unusually calm weather cycle. Follow-on tests are being planned to refine the concepts under consideration. The following writeup is excerpted from the test plan and test results of the demonstration sequence.

7.1 TEST PROCEDURE

7.1.1 Phase One

The first demonstration of a bridle marriage used techniques as documented in NAVFAC P-401 and taught to prospective craftmasters undergoing SLWT training at the Amphibious School, Coronado. The sequence requires that all bridle gear be staged onboard the causeway section (CW #1) tied alongside SLWT #1, and that a second SLWT approach with the section to be connected in tow. The oncoming section (CW #2) approaches with Flexors retracted and crew ready to receive the messenger lines from the first platform.

In the next "free style" type of marriage, bridles are not used. Rather, the two sections are brought into close proximity with the bow of one of the tugs overlapping the end of the adjacent causeway section. The SLWTs push the causeways together as the shear connectors engage, and then hold the sections in place until the Flexors are fully engaged. It took three attempts within a 4-minute period before success was realized, a number considered normal for the essential calm sea conditions.

7.1.2 Phase Two

Phase two tests were conducted to demonstrate an alternative approach to those procedures presented in NAVFAC P-401. Figure 7-1 shows the relative marriage positions of warping tugs and causeway sections as employed during most of the phase two tests. With both SLWTs heading into the prevailing seaway, maneuverability and seaworthiness aboard each craft increases, while at the same time crew members are protected from seas that could otherwise swamp the low-riding sterns.

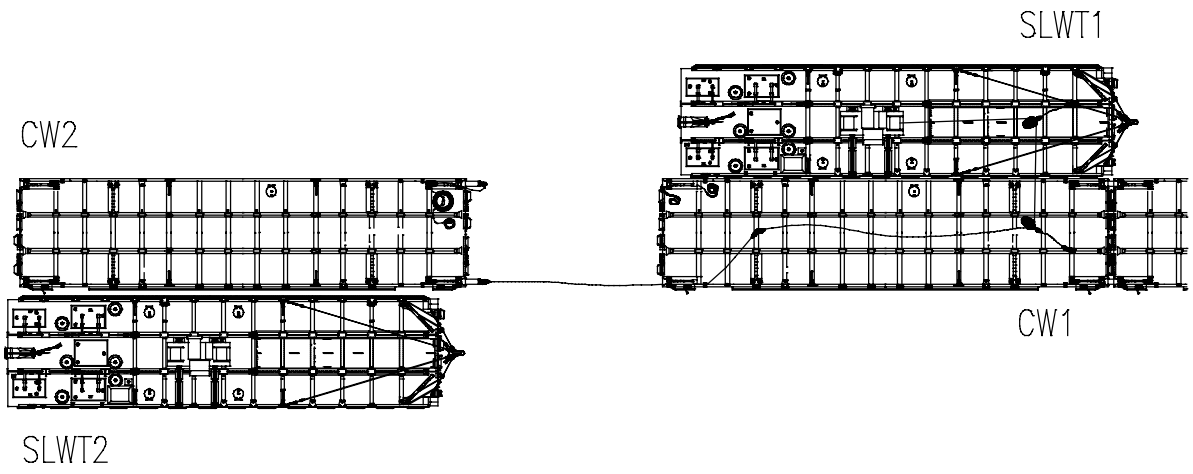

Figure 7-1. Craft positions for the recommended marriage bridle procedures.

The continuous forward motion of SLWT #1 serves to stabilize the sway of the trailing section, allowing it to "weathervane" as it lines up and eventually mates with CW #1. The required deck rigging is similar to that called out in NAVFAC P-401, and there are no differences in the types or quantities of gear required. However, the passage and connection of messenger and bridle lines is done in a manner that eliminates the requirement for personnel to put themselves in harms way by putting arms and legs between the sections (see Figure 7-2).

In the field, operations in the modified configuration produced faster and safer marriages with overall greater control than witnessed during the phase one tests. During the demonstration, the snatch block tie down on CW #1 was changed from a wire strap wrapped around a double angle to a PH-11 padeye bolted in one of the four positions available on the causeway deck. Although the padeye was placed closer to the center of the causeway than was desired, it was nonetheless fully functional with the short bridle legs.

The tests demonstrated that with the same basic rigging hardware, crew members were able to maintain their footing and stay safely on deck during an entire marriage procedure. Operationally, SLWT personnel were much more comfortable with the control that this configuration offered. The connection times were shorter and there was less random motion between CW #1 and CW #2. Fouling the "Y" bridle on the exposed bolt heads is a usual though undesirable occurrence in bridle marriages, but crew members were able to free the wire rope as it hung up.

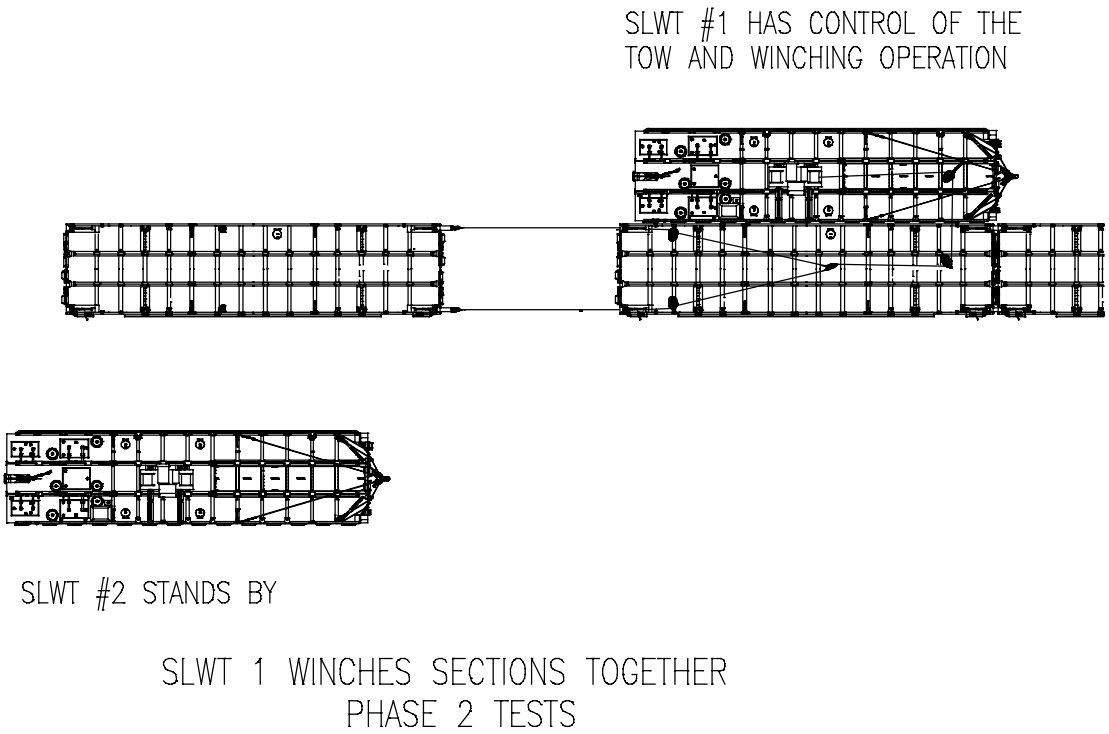

Figure 7-2. Transfer of bridle legs.

The only significant drawback to this connection method is that supporting craft may stray outside the original operational area as they steam ahead. The next series of tests will address this problem by providing one or more means of restraining the string of causeways as they conduct the marriages.

7.1.3 Out-of-Trim Sections

One important aspect of marriage bridle usage is the ability to function with causeway sections that are out of trim.To demonstrate the capabilities of the existing NL system, CW #2 was deck loaded with two 3,000-pound anchors and one 6,000-pound anchor, as depicted in Figure 7-3. The anchors were placed so that the loaded end had a freeboard of 33 inches, whereas CW #1 remained empty with a freeboard of 41 inches. The 8-inch trim differential was too great to attempt a "freestyle" marriage, especially given the prevailing weather and sea conditions of dead calm, but the sections were successfully connected while steaming ahead in the same configuration used during the phase two tests.

7.2 FINDINGS

Overall, the tests exposed a number of opportunities for improvement in hardware and operational procedure. The changes proposed herein are offered in the interest of greater safety, improved maneuverability, extended hardware durability, and improved operational capability in elevated sea states:

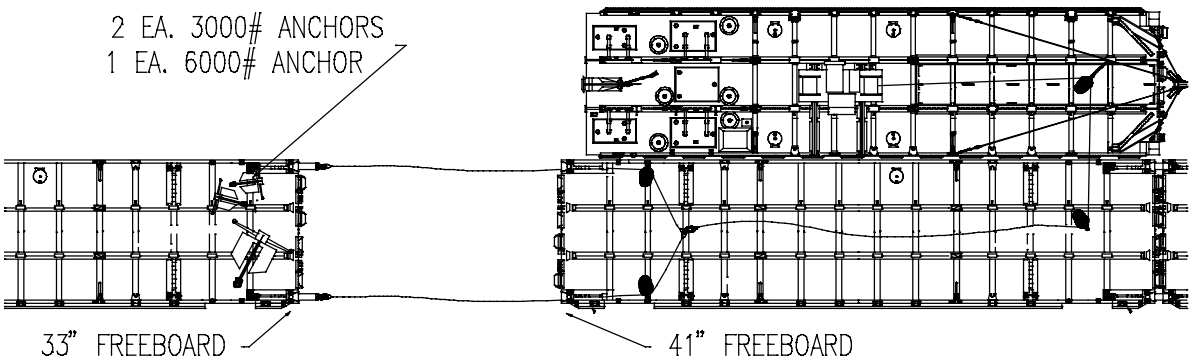

CONNECTION OF CAUSEWAYS WITH
8" TRIM DIFFERENTIAL

Figure 7-3. Connection of causeways with 8-inch trim difference.

a. CB personnel preferred to face towing a towed craft into the seaway as they carried out operations.

b. Even while both craft were heading into a seaway, there was insufficient drag on the towed section to prevent it from surging toward the lead causeway.

c. More standoff between sections is required during bridle connection.

d. Fenders may be required between the SLWT and adjacent causeway in an elevated sea state.

e. Hard points on the NL causeways are inadequate for the connection of snatch blocks. All connections should be made to certifiable hard points.

f. The deck of the SLWT has no certifiable hard point for the attachment of a bridle snatch block that permits the block to be centered on the deck.

g. The "y" shaped marriage bridle tended to hang up on the bolt heads during connection operation.

h. Improved rigging arrangements greatly increase the safety of passing and connecting the bridle legs.

i. The bridles can be used to connect sections that are out of trim by as much as 8 inches in calm water. Modifications to the design of the shear connectors would increase the capability by another 4 inches with minimal effort.

j. The fairlead slot at the end of the P-8 receiver is a source of accelerated wear on the bridles. Future pontoon designs, especially any that might rely more heavily on bridles for connections, should provide a more suitable fairlead.

k. The Flexors sometimes jam against the entrance to the receiver unless they are well aligned. This could be improved with a redesign of the head and receiver entrance.

l. Fleet personnel need to practice rough water marriages with and without the bridle system. Reports from the deck level of both PHIBCB-ONE and PHIBCB-TWO show that there is a lack of familiarity with the hardware and procedures, and virtually no training prior to an actual operation.

7.3 PLANS FOR FOLLOW-ON TESTS

The following changes will be made to select pontoon sections prior to the next set of sea trials:

- Modify the deck of the SLWT to accept a padeye on a PH-11 type of base plate. The padeye could be mounted at several locations after drilling the AP-1 plates.

- Modify the deck of one causeway to accept PH-11 or haulback ring padeyes at the first gap inboard of the P-8 pontoons. Each padeye needs to be able to resist the load of the winch and the surge load of the sections.

- Use longer bridle legs in conjunction with the new padeye locations on the deck of the causeways. If the padeyes are mounted at the extreme ends of the causeways, the bridle legs could be lengthened by at least 15 feet.

- Obtain smaller, lighter weight snatch blocks for use with the marriage bridles. Dedicated blocks with a smaller diameter sheave (grooved for 1-inch wire) would be much more manageable during transfer operations and could be stowed below deck on the SLWT.

- Fabricate a 48-inch urethane-encapsulated chain link between the Flexor and the bridle. This 4-foot transitional piece allows the personnel aboard CW #2 to stay safely on deck while connecting the bridle legs and could be designed to facilitate the inhaul procedure by providing a smoother transition and reducing the wear on the wire end connection.

- Design and fabricate chain plate guillotines to secure the mooring to the section. Use an SLWT to restrain the towed string as it heads into the seaway during bridle connections.

- Instrument the padeyes to determine the loads that are actually seen at these locations. The results would be used to establish SWL requirements for all of the rigging gear.

- Use a constant tension device to control the surge motion between the barges during a marriage. Control the "A" wire with a "Y" bridle as well as using individual control over each bridle leg.

- Operate the marriage bridle with the SLWT end connected to the string. This method would be especially suitable for forming causeway ferries.

- Configure the bridle system so that the bridle legs run from the SLWT to the outboard angles and run straight down the length of the CW #1 section. This method would permit the deck loading of causeways prior to end connection and would eliminate the fouling of bridle legs on the assembly bolt heads.

CHAPTER 8

CONCLUSIONS

Key factors in the emerging defense scenario are a rapid response and a high degree of mobility. Logistics-over-the-shore (LOTS) and operational-maneuver-from-the-sea (OMFTS) types of visions require the deployment, assembly, and operation of Navy pontoon assets on the open waters. Existing pontoon assets and construction techniques, however, are not condusive to quick and efficient assembly in sea states characteristic of an amphibious assault area. To the contrary, most current hardware is either too large or overly complicated, or is designed for compatibility with a specific vessel, and is therefore of limited utility in the military environment. Furthermore, common connective systems are designed and intended for use on inland waters, while even those suitable for operation on open seas require assembly in the virtual calm water or mild seaway. A thorough assessment of existing pontoon technology within both the private and military sectors has led to the following conclusion: it is not cost effective simply to upgrade existing inventories to develop a rough seas capability. Rather, innovative connection systems, taking into account new technologies and realistic environmental parameters, are required to achieve the open sea capability.

Pontoon modules suitable for rapid deployment by containerships are sensitive to the prevailing sea state. Perhaps the greatest technical challenge to assembly at sea results from the vigorous relative motion between adjacent modules as they are brought together - that is, during the interval of time prior to the instant when a "connection" is made and all loads are transferred to the connecting components. Therefore, component hardware must be able to accommodate the random nature of seaways. The current thinking, based on theoretical considerations and empirical observations, is that two modules should be joined together progressively - that is, by closing the gap in a continuous motion rather than by a sudden hit-or-miss impact. In this way, relative motions are dampened gradually to a level that connector components may be engaged safely. Features required in this approach include a bumper system to prevent collision damage, an alignment guide to accurate mating, and an automatic lock-in mechanism.

Both rigid and flexible types of connections are required in order to assemble large pontoon facilities at sea. Rigid connections provide a continuous solid deck surface for improved operational efficiency, while flexible connections enable better use of the structural capability. The two types of connections are spaced according to a good rule of thumb from ship design practice: the lateral dimension of a rigid hull must be less than 15 times that of the vertical dimension.

A broad technical data base has been constructed to establish the status of existing connection technologies within both the commercial and military sectors. The information in the data base was surveyed and then expanded to include new concepts as developed under this project. The innovative technologies contained herein include three alternatives of pull-in, four alternatives for rigid-type connection, and three alternatives for flexible-type connection. The section on technical assessment highlights the functional and structural requirements of a practical connecting system, as well as the deficiencies associated with existing and proposed technologies. Lessons learned during the process of evaluating the "state of the art" have been integrated into

a system recommended for further development - a system with a high potential for open sea operation.

Section 6.4 of this report presents the details of the recommended connecting system, including a discussion of the pull-in procedure as well as individual descriptions of the rigid and flexible connections. Although the basic operation required to connect two modules is very similar to current military practice, the revised sequence of procedures is simpler, safer, and more accommodating of the random motions encountered. Connections are made without staging personnel at or dangerously near the joints, and without specialized or unique equipment.

REFERENCES

1. Naval Facilities Engineering Command. NAVFAC P-401: Pontoon gear manual. Alexandria, VA.

2. Naval Facilities Engineering Service Center. Technical Memorandum TM-2024-AMP(CR): Hydrodynamic load and motion of pontoon modules in seaways for barge connecting systems, by C.J. Garrison. Port Hueneme, CA, Feb 1994 (informal document).

3. Naval Civil Engineering Laboratory. Technical Memorandum TM-65-90-03: Interaction of ships with berth at floating terminals, by T.S. Huang. Port Hueneme, CA, Mar 1990 (informal document).

4. Naval Facilities Engineering Service Center. Contract Report: Ocean module barge connection systems development. FBM Marine Holdings (UK) Limited, Feb 1994.

5. Naval Facilities Engineering Service Center. Contract Report: Design concepts for the ocean barge module connection system. Ventura, CA, Western Instrument Corporation, Dec 1993.

Appendix A

THE UNIVERSAL END CONNECTOR SYSTEM FOR NL PONTOON BARGES

1.0 INTRODUCTION

The Universal End Connector System (Figure A-1) is comprised of Flexor tensile connectors and the P-8 pontoon assemblies which house the Flexors. Details of the sole function of the Flexor connector is to withstand the tensile forces generated by the movement of the connected causeways, and under all normal operating conditions it serves very well. The P-8s are outfitted with pipe/socket shear connectors that absorb the lateral and vertical shear forces as well as the compressive loads. There are several aspects of the system design that, at one time or another, affect the function and operation of the system. These causes and effects have impact on the integrity of the connections and should be noted for operational security as well as guidance for future connector development. The hardware arrangement of this connection system will be summarized in the following sections. Further details can be found in Reference A-1.

2.0 P-8 PONTOON ASSEMBLIES

The P-8 pontoon assemblies (Figure A-2) consist of P-8 left and right pontoons with Flexor receivers. The P-8 left pontoon is fitted with a male shear connector and the P-8 right pontoon is fitted with a female shear connector. The right and left modules are separated by a center pontoon that is fitted with a male and a female shear connector, but no Flexor. The pontoon structure is identical to a basic P-2 end pontoon, with some modifications to accept the Flexor receivers and the shear connectors. The fit of the P-8 within the causeway structure is the same as the P-2

3.0 RECEIVERS

The Flexor receivers (Figure A-3) are reinforced box structures that utilize a removable guillotine to lock one end of a Flexor in position. The housings are used as structural terminations for the operational Flexors as well as protective enclosures for Flexors during transport. The guillotines are one-piece U-shaped plates of high strength steel that are dropped through an opening in the deck of the receiver when the matching slots in the Flexor are aligned. Once the guillotine is fully seated in the slot, two locking bars are moved into position to assure that the guillotine remains in place. The deck of the Flexor housing is partially covered with a hinged grating that can be swung open for access to the inboard end of a Flexor that is stowed within the receiver. The access is also used to facilitate the routing of the wire used in bridle-type marriages. Experience has found that there are noteworthy functional characteristics to each of these components.

4.0 FLEXOR CONNECTORS

Since the Flexor (Figure A-4) was first used as the primary means of connecting NL lighterage, there have been three significant changes to the procurement drawings. These changes have resulted in four different models of connectors currently being used by the Fleet. The evolutionary process has affected and changed the design or specifications of every component within the connector, and has resulted in a Flexor that is much stronger, safer, more reliable, cheaper, longer lasting, and more cost effective than the original. Procedures and specifications have been compiled that permit the rebuilding of many Flexors, allowing the reuse of hard parts and realizing significant cost savings.

5.0 UNIVERSAL END CONNECTOR SYSTEM FUNCTIONAL PERFORMANCE

During the time that Flexors have been used to connect NL and Army modular lighterage, there have been several incidents that have revealed the strengths and limitations of the connectors. The greatest problem that operators have involves the marriage of two or more causeways. This evolution is usually the controlling factor in whether or not an operation can be conducted and is the primary cause of damage to Flexors and end connectors. There have also been several personnel injuries that can be attributed to the operation. A wide variety of platforms have been assembled, including ELCAS, RO/RO, causeway ferries, 8-section floating piers for REFTRA operations, administrative piers, and other configurations that utilize both the P-8 end connector and the P-9 side connector.

As previously indicated, the operation that poses the greatest hazard to both men and equipment is the process of marrying the sections together. The maximum wave height that limits the progress of causeway marriages has been loosely defined as 3.5 feet (low sea state 3), and is the second lowest threshold in NL operations (crane operations on floating platforms are more severely limited). Documented operations that were able to safely and effectively connect sections in a 3.5-foot wave environment are not readily available.

REFERENCE

A-1. Naval Civil Engineering Laboratory. Technical Note N-1727: Development of P-8 pontoon-flexor end connector system for Navy pontoon causeway equipment, by W.G. Hatch. Port Hueneme, CA, Jul 1985.

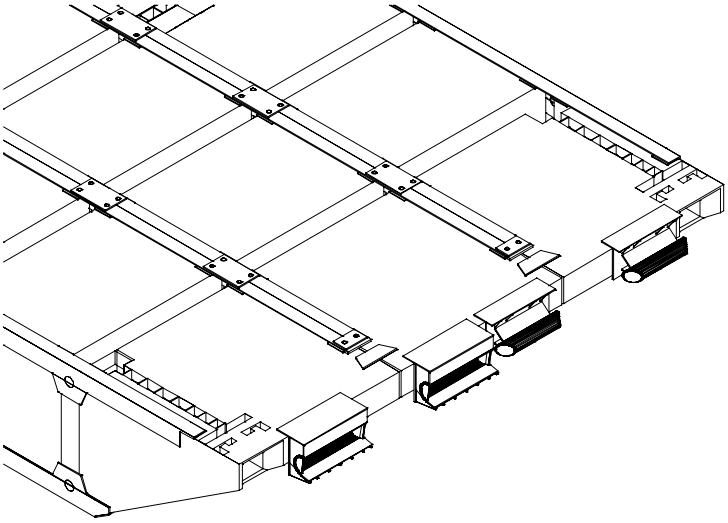

(Isometric View)

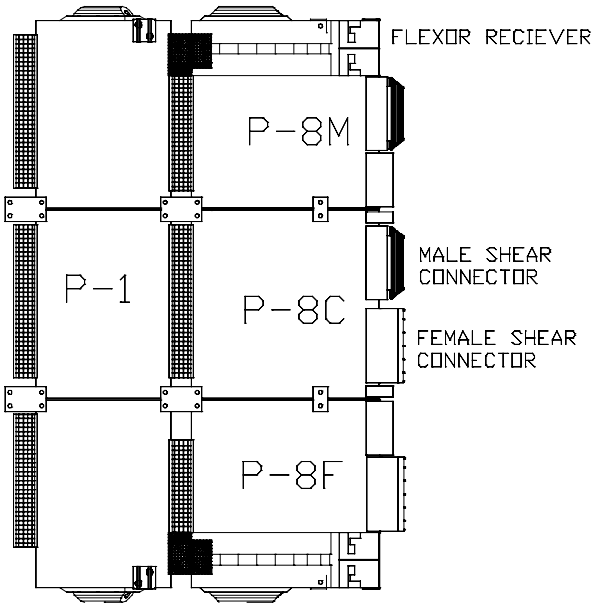

(Plan View)

Figure A-1. Universal end connector system on powered causeway section.

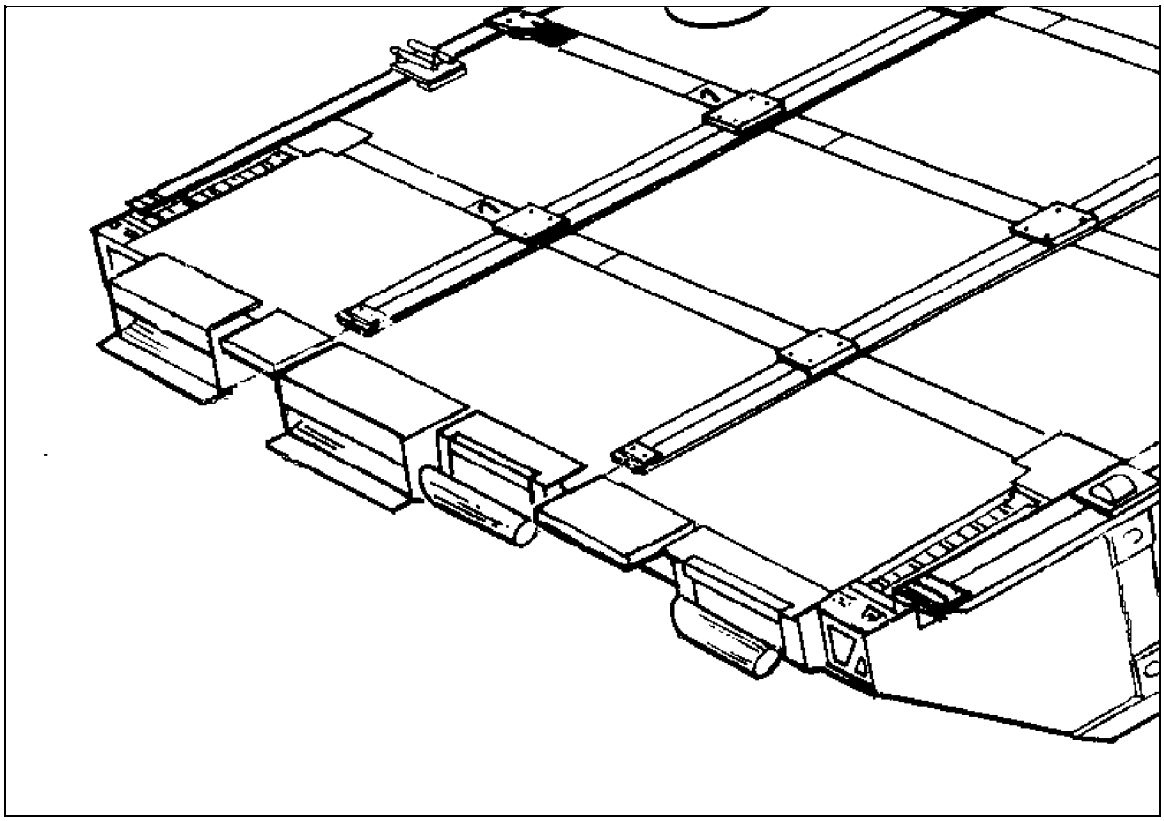

Figure A-2. P-8 pontoons with shear connectors.

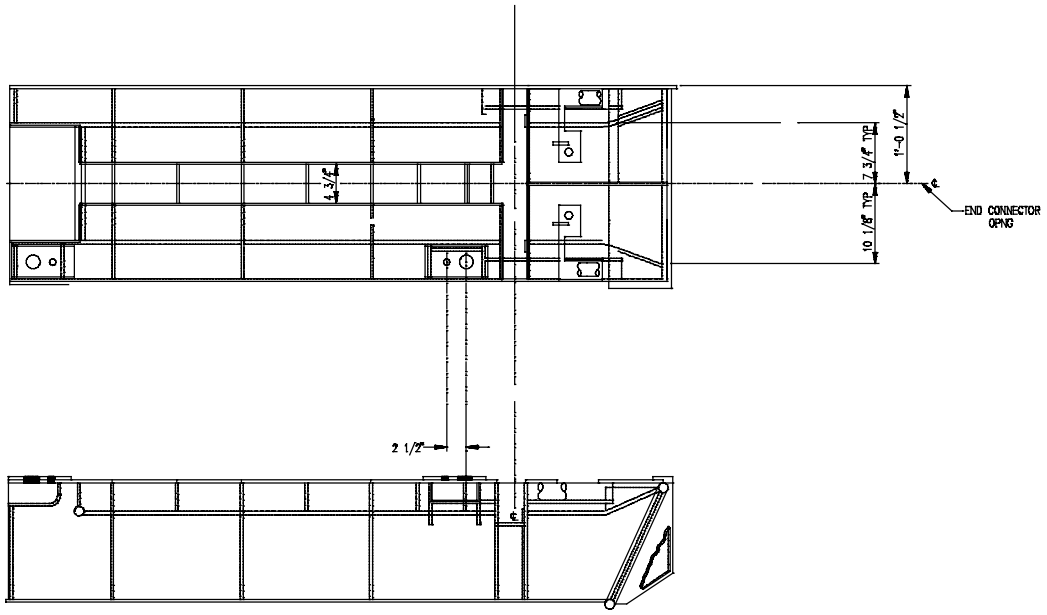

Figure A-3. Flexor receiver for P-8 pontoons.

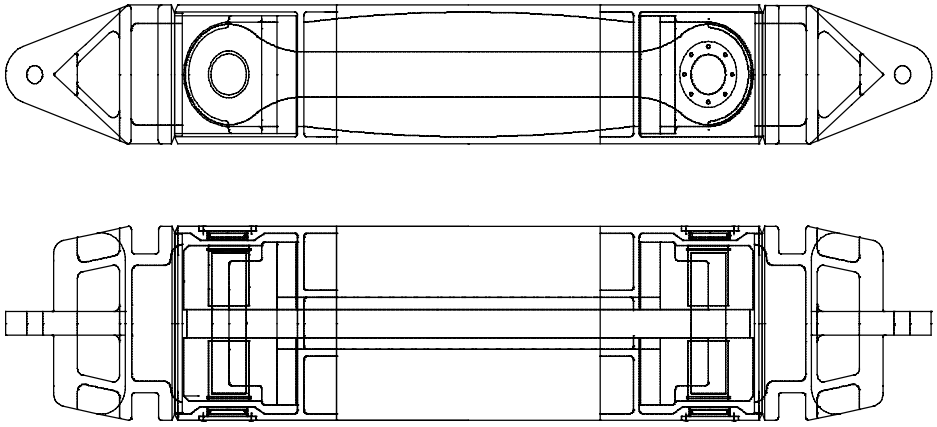

FLEXOR PONTOON CONNECTOR (PHANTOM)

Figure A-4. Flexor pontoon connector.

Appendix B

HYDRODYNAMIC ANALYSIS

A preliminary hydrodynamic analysis has been conducted by C.J. Garrison using his MORA program to determine some fundamental design criteria for open sea connections of pontoon modules. The analysis determined: (a) the wave-induced motion of modules in seaways, both during interfacing and after assembly, (b) the dynamic loads which must be resisted by connectors to achieve a rigid connection, and (c) the line tension on the cable used to pull two modules together in seaways.

Table of Contents

1.0 INTRODUCTION 2

2.0 LOADS RESISTED BY MODULE CONNECTORS IN WAVES 3

- 2.1 Methodology 3
- 2.2 Numerical Hydrodynamic Analysis 3
- 2.3 Interface Loads RAO 4
- 2.4 Wave spectra 7
- 2.5 Bending Moments 9
- 2.6 Slamming 11

3.0 DYNAMIC RESPONSE OF FREE-FLOATING BARGES 12

- 3.1 Barge Configurations and Methodology 12
- 3.2 Dynamic Response Results 16
- 3.3 Acceleration Response 16
- 3.4 Effect of Viscous Damping 16
- 3.5 Relative Motion of Two Modules 18
- 3.6 Effects of Water Depth 22

4.0 DYNAMIC RESPONSE OF MODULES RESTRAINED BY MOORINGS 23

- 4.1 Dynamic Cable Tension During Interfacing of Modules 23
- 4.3 Drag of Barges 25
- 4.4 Mooring Requirements During Interfacing 27

REFERENCES 28

1.0 INTRODUCTION

This appendix describes the results of a hydrodynamic and dynamic analysis of modules joined together to form barges both during interfacing of modules and after assembly. The barges are then subjected to a seaway of various magnitudes and heading directions.

As a part of this study, analyses have been carried out to evaluate the loads which must be resisted by connectors used to join the barges rigidly together. The analysis of the loads at the interface or connection interface is treated for both two- and three-module, end-to-end barge configurations.

Also, the results of the analysis of the motion of the barges in a seaway are presented. In this case, the dynamic response of the barges in 6 degrees of freedom due to wave action was evaluated as a function of wave direction, wave spectrum, and barge configuration.

Finally, during the module connection operation, two modules approach each other as they are pulled together by cables. Thus, the two-body problem has been considered where two barges are pulled together in a seaway. Here, it is the relative motions which are of interest as well as the mooring line tension.

The modules as modeled consist of sealed boxes 25 feet wide and 40 feet long in plan view, and 8 feet high. Each module has connections on the vertical "front sides" for joining into larger barge units. The configuration of two joined modules is depicted in Figure B-1, with the coordinate system as shown.

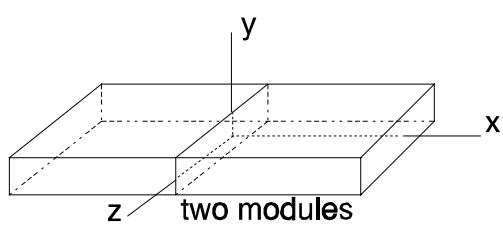

Figure B-1. Two-module barge configuration.

In this report, all calculations have been based on linear, three-dimensional diffraction theory following methods developed by Garrison (1970,1974) and Faltinsen and Michelsen (1975). The three-dimensional diffraction theory has enjoyed enormous success in application to large-displacement ocean structures of all types from ships to tension-leg platforms since this time. In fact, considering its linearized basis it has far exceded the fondest expectations of its developers in the early 1970s for application to design wave spectra and large regular waves.

In the present application to very shallow-draft barges, there is some concern regarding the kinds of errors which might be expected since this represents a somewhat unusual application. While experience seems to indicate that the theory tends to far exceed expectations, it is also clear that there are cases which are too nonlinear to be accurately treated by the linear theory if large waves are involved. In the present case, the waves are not highly nonlinear but the draft is very small and the bottom of the barge will become unwetted. Thus, some error is expected due to this nonlinear effect which cannot at this time be accessed.

2.0 LOADS RESISTED BY MODULE CONNECTORS IN WAVES

2.1 Methodology

Wave loads that must be resisted by the module connectors represent an important consideration in the development and design of the connectors. Once two or three modules are rigidly connected, the loads which must be resisted by the connectors due to wave motion should be evaluated.

In order to compute the connector loads, it is necessary to analyze the response of the combined modules (barge) to waves and then compute the total loads on just one of the modules due to the surrounding water, the inertial reactions due to the structural mass distribution, and the weight vector. This analysis has been carried out using the computer program package, MORA (MORA User's Guide, 1993). In this program three-dimensional diffraction theory is used to evaluate the hydrodynamic coefficients and eventually the response amplitude operator (RAO) for the load components resolved in axes with the origin located at the center of the module interface side. This load RAO information is then used in conjunction with the wave spectrum to obtain the statistical properties of the loads at the interface between modules. As noted in the following, however, it is actually only the bending moment about a horizontal axis at the interface which is of primary interest since only this component is large and effective in generating loads on the connectors.

2.2 Numerical Hydrodynamic Analysis

The three-dimensional diffraction theory analysis (MORA computer program) requires discretizing the immersed surface of the multimodule barge into a quadrilateral grid. The immersed surface of the barge is then represented by a surface source distribution uniformly distributed over each panel. The subdivision of the immersed surface must be sufficiently fine to obtain convergence of the numerical solution. The grid used to make the calculations is shown in Figure B-2 for a two-module barge. A total of 256 source panels was used to represent the immersed surface. For the three-module, end-to-end configuration studied, the immersed surface grid was extended to 376 panels of equal size having the same fineness as in the other two cases.

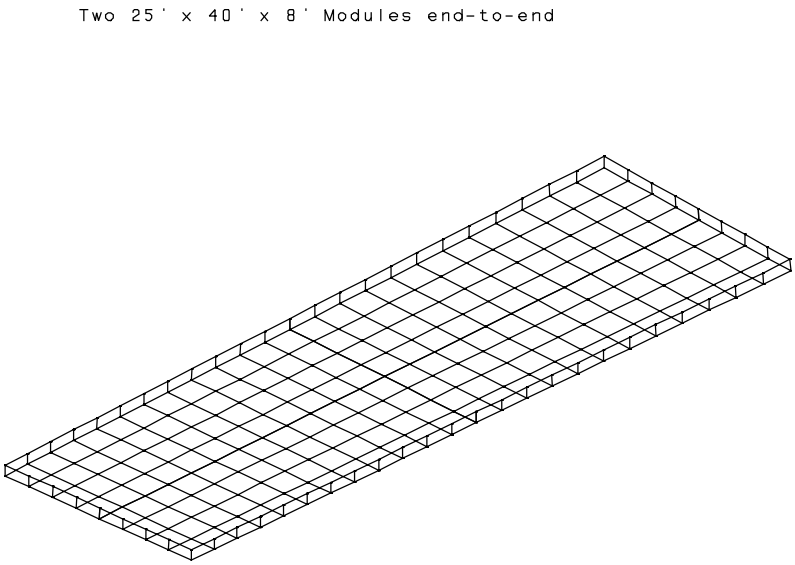

Figure B-2. Immersed surface grid - two-module barge - 256 panels, length = 80 feet, beam = 25 feet, draft = 1.2 feet.

In view of the shape of the modules, it appears obvious that the load components of primary interest at the connection end of the modules is only the moment about a horizontal axis. Calculations of all six load components indicate that the other five components of the loads do not affect the connector loads. For instance, shear loading at the interface (F_y and F_z) is of little interest because it is small and also very easy to resist through most practical connector designs. A moment about the longitudinal axis of the barge (M_x) is resisted at the interface as shear also. The magnitude of this component is relatively small and the connector spread dimension (lever arm) is fairly large due to the 25-foot beam dimension, so this component is insignificant. The moment about a vertical axis at the interface (M_y) is typically small also due to the fact that the barge draft is small, presenting a small area upon which the wave pressure acts. Additionally, the connector will have a fairly large spacing allowed by the 25-foot beam dimension as noted, so the resulting connection load will be negligible. The critical load component is the moment about a horizontal axis (M_z) at the interface since it is relatively very large and the resistance to this moment must be supplied through tension at the connectors. The tension load on the connectors is increased by the limited vertical spread dimension between connectors due to the 8-foot vertical dimension of the modules. Thus, the load analysis is concentrated on this moment component about a horizontal axis although all components have been computed for the sake of completeness.

2.3 Interface Loads RAO

Using three-dimensional diffraction theory analysis and the motion analysis of the multiple-module barge, the response amplitude operator (RAO) was computed for the loads of

a coordinate system with the origin at the center of the interface between modules. The purpose of this analysis was to define the loads which must be resisted by the connectors.

For the purpose of evaluating the moment RAO, the mass distribution of the overall barge and of each module was needed. This was computed based on a 1.2-foot draft giving a displacement of 77,127 pounds per module. The radii of gyration were estimated by assuming that the total mass of the module was uniformly distributed over the surface of the box-like form. That is, the module was approximated by a simple shell structure. The particulars for end-to-end modules are listed in Table B-1.

Table B-1. Mass Distribution Characteristics

		About Center			About one end of module		
Module Conf.	Total Displ. (lbs)	I_{xx} slugs-ft^2	I_{yy} slugs-ft^2	I_{zz} slugs-ft^2	I_{xx} slugs-ft^2	I_{yy} slugs-ft^2	I_{zz} slugs-ft^2
1 module	77,127	.202 x 10^6	.400 x 10^6	.404 x 10^6	.202 x 10^6	.181 x 10^7	.135 x 10^7
2 modules*	154,255	.405 x 10^6	.362 x 10^7	.273 x 10^7			
3 modules*	231,382	.606 x 10^6	.887 x 10^7	.888 x 10^7			

*Modules are rigidly connected end-to-end.

Loads corresponding to an operational sea state of about 2.5 and 3.0 have been computed. For purposes of connector design, the bending moment about a horizontal axis at the interface between modules is the most critical load component as described above. This load component is large due to the large horizontal bottom area of the barge and it is also the most difficult to resist due to the small (8 feet) vertical dimension of the barge. This moment component is referred to as M_z and is defined in Figure B-3, which shows the right-hand coordinate system used to define all loads and motions. Thus, it is this component that is emphasized in the following.

Calculations of the bending moment RAO at the center of the interface between the two modules are shown in Figure B-4 for both zero degrees wave direction and 30 degrees wave direction. Zero degrees corresponds to head seas. The figure shows that the worst case (greatest RAO values) corresponds to the head seas case, as is expected.

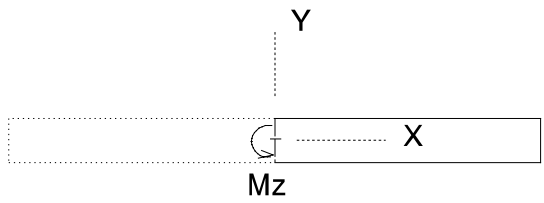

Figure B-3. Definition of the load components for a two-module barge.

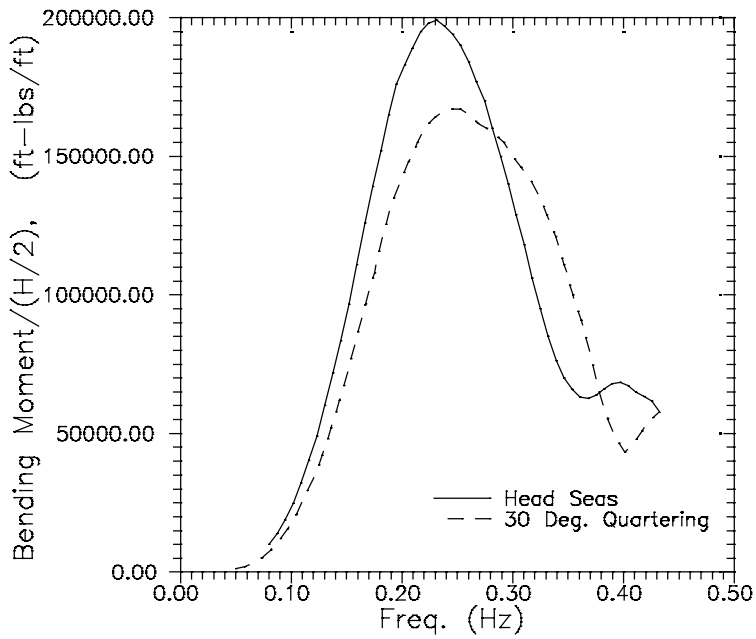

Figure B-4. Bending moment RAO for the two-module barge at the interface center.

For the case of a three-module barge, the bending moment RAO is shown in Figure B-5. In this case the RAO depends, for a given wave direction, on which of the two interfaces is considered. Load RAOs for both head seas and following seas were evaluated and the results show that in head seas the forward connection experiences the greater bending moment. This is to be expected since the greatest wave action is expected to occur on this windward side. Thus, the results presented in Figure B-5 correspond to the interface between the bow and center module, which correspond to the greatest loads.

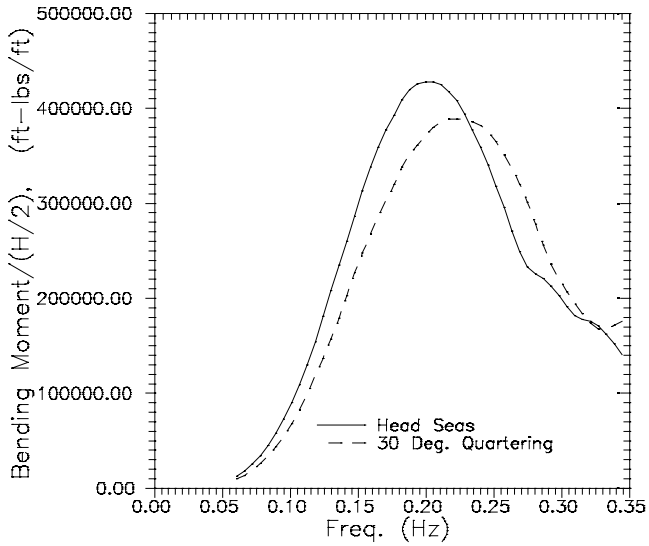

Figure B-5. Bending moment RAO for the three-module barge at the forward connection.

2.4 Wave Spectra

There are three wave spectra that are considered in this report: two operational spectra and a survival spectra. The operational spectra are characterized by an ISSC spectrum with significant wave height and a peak frequency shown in Table B-2.

Table 2.2. ISSC Wave Spectra

Sea State	H_s (ft)	f_0 (peak, Hz)
2.5	3.0	0.20
3.0	3.3	0.18
5.0	10.0	0.11

The operational and survival spectra as defined above are plotted in Figures B-6 and B-7, respectively.

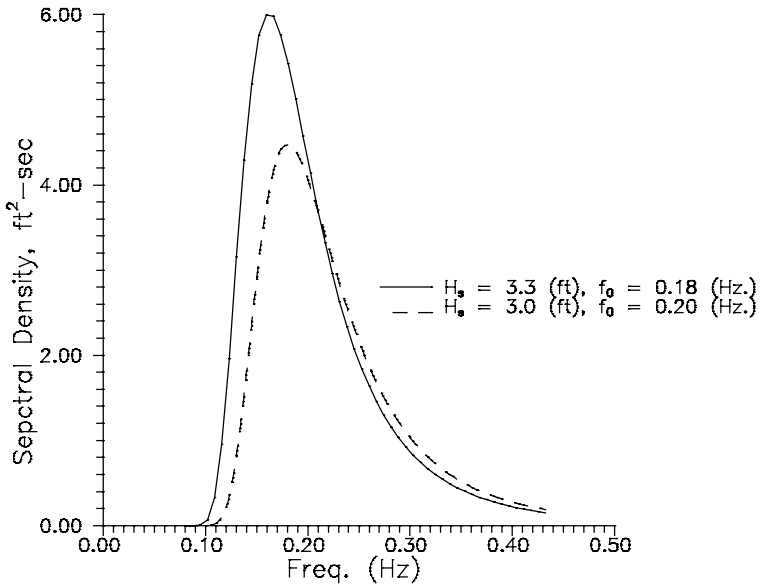

Figure B-6. Operational wave spectra; ISSC spectra, sea state 2.5 and 3.0.

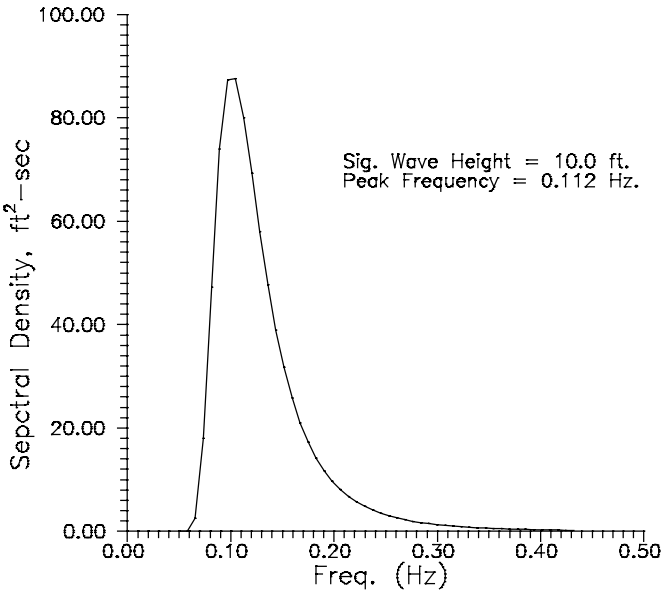

Figure B-7. Survival wave spectrum, ISSC spectrum, sea state 5.

2.5 Bending Moments

2.5.1 Two-Module Barge. Using the RAO information shown in Figure B-4, the statistical values of the bending moment were computed for both the operational spectra and the survival spectrum. For a horizontal axis at the center of the interface between the two modules, the values of the significant bending moment are shown in Tables B-3 and B-4. In the table, 0 degrees wave direction refers to head seas. The maximum moment is computed by multiplying the significant value by 2.0. This multiplier depends on the duration of exposure to the structure to waves and values between 1.86 and 2.0 are typical. The results shown in Table B-3 and B-4 indicate that the headseas condition represents the worst case.

Table B-3. Significant Values of the Load Components
(At Interface - Two-Module Barge, Sea State 2.5)

Wave Dir. (deg)	F_x (kips)	F_y (kips)	F_z (kips)	M_x (ft-kips)	M_y (ft-kips)	M_z (ft-kips)
0	2.10	4.00	0	0	0	230.0
15	2.00	3.70	0.46	25.0	16.0	220.0
30	1.90	3.00	0.80	47.0	35.0	190.0
45	1.70	2.00	0.98	65.0	59.0	150.0
60	1.40	0.99	1.4	72.0	90.0	98.0
75	0.79	0.23	2.40	58.0	140.0	34.0
90	0.19	0.19	2.80	15.0	170.0	5.4

Table B-4. Significant Values of the Load Components
(At Interface - Two-Module Barge, Sea State 3.0)

Wave Dir. (deg)	F_x (kips)	F_y (kips)	F_z (kips)	M_x (ft-kips)	M_y (ft-kips)	M_z (ft-kips)
0	2.10	3.90	0	0	0	240.0
15	2.05	3.60	0.45	25.0	18.0	230.0
30	1.92	2.80	0.78	48.0	38.0	200.0
45	1.71	1.90	0.95	65.0	62.0	153.0
60	1.36	0.91	1.28	70.0	92.0	94.0
75	0.74	0.21	2.20	55.0	133.0	32.0
90	0.18	0.11	2.60	13.4	160.0	5.1

2.5.2 Three-Module Barge. Using the RAO information shown in Figure B-4, the statistical value of the bending moment has been computed for the operational and survival spectrum for the three-module barge and the results are presented in Table B-5. In Table B-5, the results are limited to the bending moment about a horizontal axis since this is the critical load component as discussed previously.

Table B-5. Significant and Maximum Values of the Bending Moment
(At Interface - Three-Module Barge)

Sea State	$H_{(sig)}$ (ft)	T_0 (peak per sec)	Wave Dir (deg)	Sig. $M_{(z)}$ (ft-lb)	Max.* $M_{(z)}$ (ft-lb)
2.5	3.0	5.0	0 **	5.08×10^5	10.16×10^5
2.5	3.0	5.0	30	4.64×10^5	9.28×10^5
5.0	10.0	8.9	0 **	10.7×10^5	21.4×10^5
5.0	10.0	8.9	30	8.96×10^5	17.92×10^5

* Approximately based on 2 x significant values.
** 0 degrees wave direction refers to head seas.
Results in the table are for the interface between the bow and center module in head seas which represents the worst case.

2.6 Slamming

Slamming loads are produced when the hull of a barge or ship broach and then reenter the water with some substantial relative velocity. Both theoretical and experimental slamming studies have been conducted for ships hulls underway (Ochi and Motter, 1973). The probability relationship for slamming is given by:

$$PROBS = \exp\left[-\frac{F_c^2}{2\,\sigma_{RM}^2} - \frac{\dot{R}^2}{2\,\sigma_{RV}^2} \right]$$

where:

PROBS = probability of slamming (or submergence).

F_c = the local draft (local free board for submergence).

$\dot{R}$ = the threshold velocity input (m/s) = $3.66\sqrt{L_{pp}\,158.5}$ for a ship.

σ_{RM}^2 = the variance of the relative motion.

σ_{RV}^2 = the variance of the relative velocity.

From the statistics, the number of slams per hour is given by

$$NO./HR = \frac{3600}{2\,\pi}\,\frac{\sigma_{RV}}{\sigma_{RM}}\,PROBS$$

In the relative velocity and acceleration calculation the scattered wave as well as the radiated waves due to response in the 6 degrees of freedom of the hull are included in the calculation of the relative motion. That is, in the MORA program the surface elevation includes the effect of the presence of the hull (large-displacement body) in the incident wave and the radiated wave effect produced by its motion.

It should be pointed out here that these equations have a semitheoretical basis. The assumption for slamming is that intersection between the hull (or point in question on the structure) and the water surface must occur and that the relative velocity must have some finite value. This relative velocity value must be greater than some threshold value. However, the threshold velocity is not defined theoretically and it is necessary to adjust the value of this parameter based on experimental results. For ship bow slamming in head seas, the equation for the threshold velocity given in the definition above has been shown to be valid. However, this result is for ships in head seas and the threshold velocity for slamming of shallow draft barges has not been studied and may differ from this.

As a consequence of the lack of test data, the slamming results for other than ships in head seas is questionable in an absolute sense. However, as noted, the equation defining slamming probability has a theoretical basis and the relative velocity and displacement is computed from the dynamic response. Accordingly, it is expected that the basic equation for slamming is still valid for barges, at other than the bow location and for other than the head seas condition. Thus, while absolute results for slamming at other than the bow location for a ship cannot be defended, it is expected that the results may provide reasonable absolute results and at least a relative indication of the susceptibility for slamming.

Slamming calculations have been carried out for the two- and three-module (end-to-end) barges and are based on the threshold velocity given above for ships. The statistical results indicate that there is no possibility of slamming.

For the three module barge in head seas the relative motion (hull/water surface) at the bow in head seas is computed by MORA for the survival spectrum as:

Significant Relative Displacement (ft):	2.54	(4.79 max. in 3 hrs)
Significant Relative Velocity (ft/sec):	3.27	(6.16 max. in 3 hrs)

3.0 DYNAMIC RESPONSE OF FREE-FLOATING BARGES

3.1 Barge Configurations and Methodology

The dynamic response for a single module, two modules rigidly connected end-to-end, and three modules connected end-to-end have been evaluated. The draft of the barges was 1.2 feet and the mass distribution is described in Table B-1. Within the description of the response results the 0 degree wave direction refers to the head seas condition and 90 degrees refers to beam seas. By virtue of the symmetry of the barges (assembled modules) it is only necessary to consider the wave direction range of 0 to 90 degrees. Thus, results for the motions exposed to the operational spectrum are presented in Figures B-8 through B-13 as a function of wave direction from 0 to 90 degrees. In these figures, the motion response was computed at the center of gravity of the barge which was at the physical center of the configuration.

The dynamic response was computed based on the linear three-dimensional diffraction theory analysis using the computer program MORA. For the bulk of the calculations as presented in Figures B-8 through B-13, no viscous roll damping was included since the radiation damping tends to be rather large for shallow-draft barge configurations and its relative effect was expected to be small. It is expected to be especially small for the operational spectrum since the significant wave height is small and viscous damping is quadratic in the amplitude of the relative motion. For shallow-draft barges, even roll radiation damping, which is typically small in the case of typical ships, is not small. However, to actually check the effect of viscous damping the quadratic viscous damping coefficient was estimated based on model test results for ship-like bodies (Kato, 1958; Tanaka, 1961; and Schmitke, 1978). In MORA the viscous damping is modelled through the use of equivalent small diameter drag members, in which case the quadratic nature of the damping is included. A linearized drag coefficient is computed based on the (root mean square) rms relative velocity for the complete frequency spectrum as discussed subsequently.

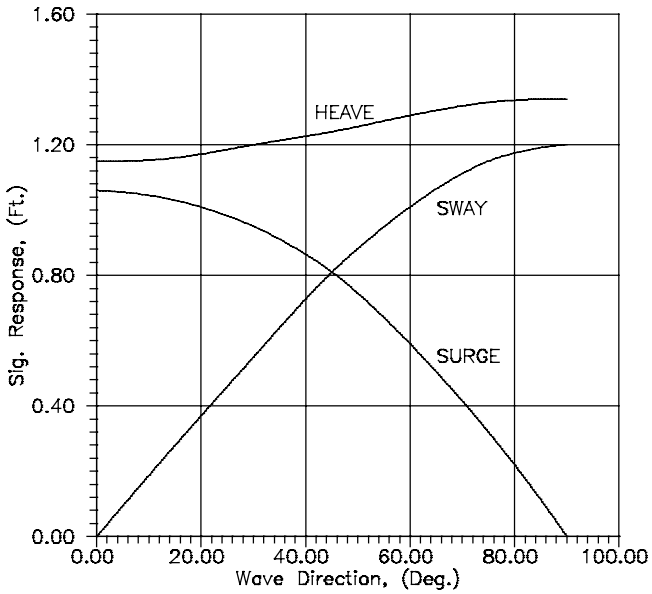

Figure B-8. Surge, heave, and sway response, sea state 2.5, 1 module.

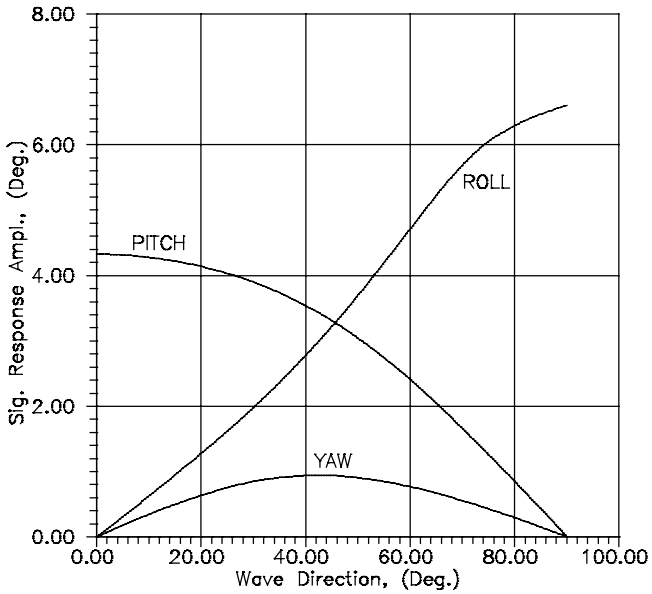

Figure B-9. Roll, yaw, and pitch response, sea state 2.5, 1 module.

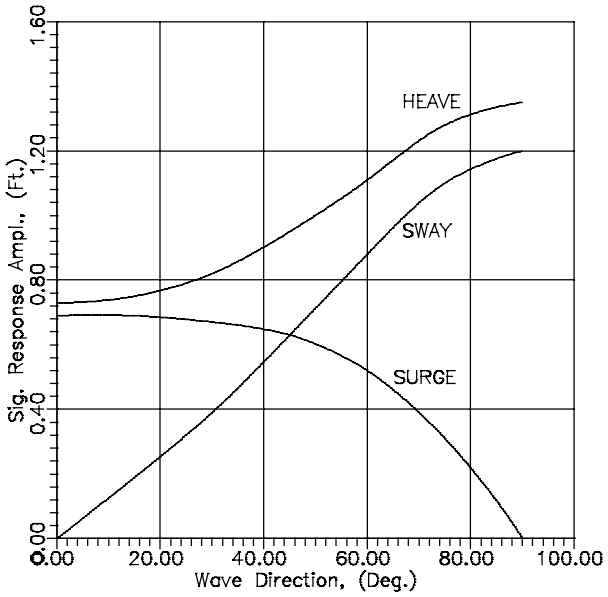

Figure B-10. Surge, heave, and sway response, sea state 2.5, 2 modules.

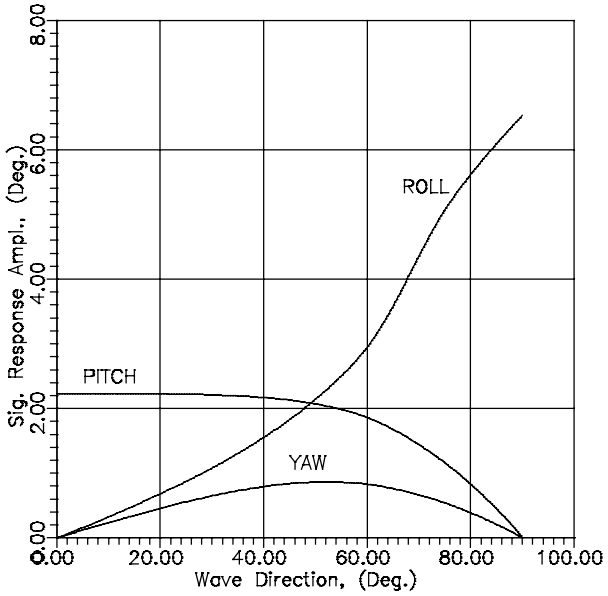

Figure B-11. Roll, yaw, and pitch response, sea state 2.5, 2 modules.

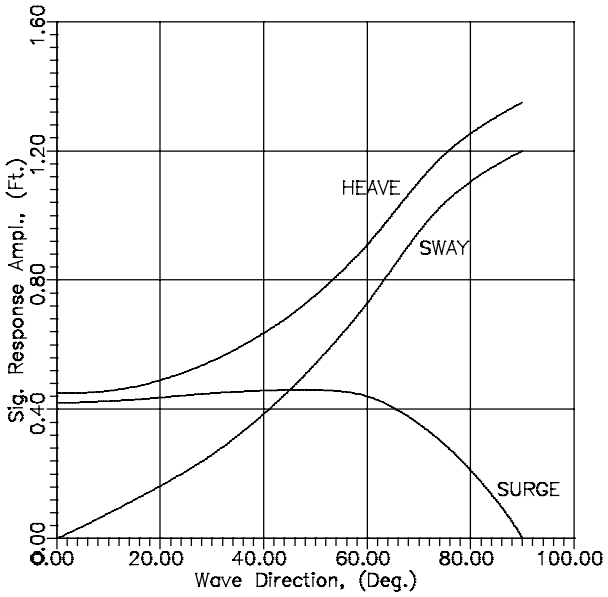

Figure B-12. Surge, heave, and sway response, sea state 2.5, 3 modules.

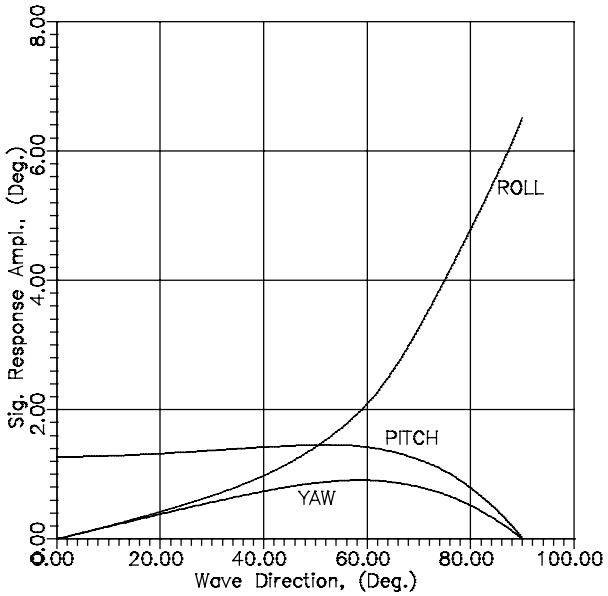

Figure B-13. Roll, yaw, and pitch response, sea state 2.5, 3 modules.

3.2 Dynamic Response Results

The dynamic response measured at the center of gravity of the structure (physical center of the barge structures) in the 6 degrees of freedom is shown in Figures B-8 through B-13. Figures B-8 and B-9 refer to the single module, Figures B-10 and B-11 refer to two modules end-to-end, and Figures B-12 and B-13 refer to three modules connected end-to-end.

The results show the expected trends. The pitch response is maximum in head seas and tends to zero for beam seas. Heave is not strongly dependent on wave direction for the single module since the single module is somewhat square (25 by 40 feet). But, for the longer barges, heave is reduced in head seas due to averaging over the length of the barge while it is about the same magnitude in all cases for beam seas.

The roll response is similar in trend for all three barges, zero for head seas and increasing toward a maximum for beam seas. The beam sea case produces about the same response for all three barges as expected, since the waves are treated as long-crested waves, i.e., one-dimensional spectrum. Had directional spreading been included in the description of the incident waves, the peak roll as well as sway and heave motion components for beam seas would have decreased as the length of the barge increased. Thus, in view of the one-dimensionality of the incident wave spectrum, the motion for beam seas is probably somewhat conservatively large. This is also more important for the (exactly) 90-degree wave direction and for the higher frequency, operational wave spectrum.

3.3 Acceleration Response

The procedure for making the connections between modules may or may not require personnel to carry out operations at the module interfaces. However, under any circumstances personnel will most likely be onboard and be subject to the wave-induced motions of the barges. For this reason, the vertical acceleration has been evaluated at the end of the barges (one module, two and three modules connected end-to-end). If personnel were involved in the connection procedure, this would be the most likely location where they would have to stand.

The vertical acceleration (significant values) for the centerline deck location at the "bow" for 0- to 180-degree wave directions is shown in Figure B-14. The wave spectrum in this case was sea state 2.5. The significant vertical acceleration values are greatest for the single modules, as might be expected, and the maximum (significant) value is 4.65 ft/sec^2. It is beyond the scope of this report to assess the effect of this on the personnel, but clearly the magnitude of this vertical acceleration taken together with the horizontal accelerations, which are calculated to be in the 0 to 1.8 ft/sec^2 range, do not represent a very stable platform for carrying out operations.

3.4 Effect of Viscous Damping

It was noted above that the bulk of the dynamic response results, for the operational spectrum presented in Figures B-8 through B-13, was based solely on potential flow theory and did not include viscous effects. However, it was of interest to evaluate the effect of damping, and that was also carried out by use of the computer program MORA.

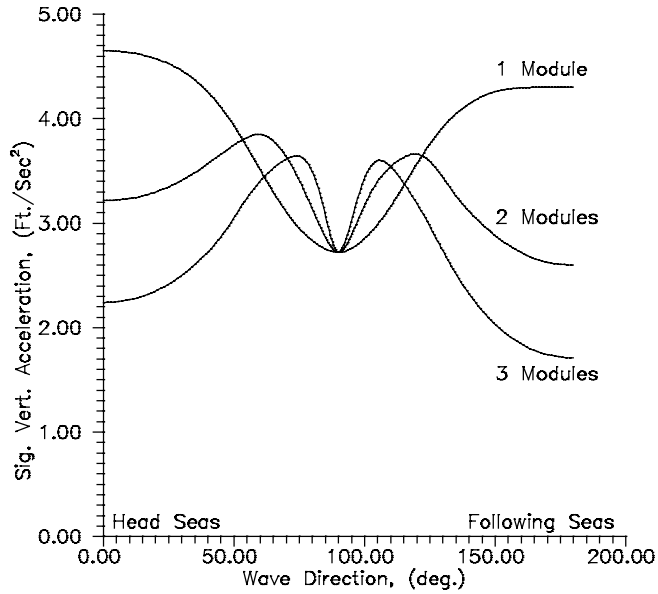

Figure B-14. Vertical acceleration at the end of the barge on the centerline, sea state 2.5.

Viscous damping results from the sharp corners of the barge and tends to be quadratic in nature. This is the general nature of viscous damping and also the nature of viscous roll damping found by Tanaka (1961) for rectangular two-dimensional bodies at zero forward speed. Tanaka's experimental results show that the damping acts like drag concentrated at the sharp corners and varies quadratically with increasing angular velocity of the hull. In the MORA program (MORA User's Guide, 1992) this may be modelled by use of small diameter members placed around the periphery of the submerged sharp corner. Tanaka's experimental data was used to fix the size and drag coefficient of the equivalent slender member. On the 40-foot sides the two members were 0.1 foot in diameter with a drag coefficient of 31.0, and on the 25-foot sides the members were also 0.1 foot in diameter with a drag coefficient of 50.0. Inertia loads for the slender member were not included.

The MORFRED postprocessor, which is part of the MORA suite of programs, is based on a frequency-domain analysis and, therefore, uses a linear analysis. The quadratic drag was included in the analysis through use of a linearized drag analysis where the linearized drag coefficient was properly computed based on the rms relative normal velocity over the complete frequency range of the wave spectrum.

The results presented in Figure B-15 show the comparison of the roll and pitch for a single module both with and without viscous damping. The results show that the damping has about a 10 percent effect in reducing the roll response for the beam seas case. The viscous damping had only a negligible effect on the other components of the response as expected.

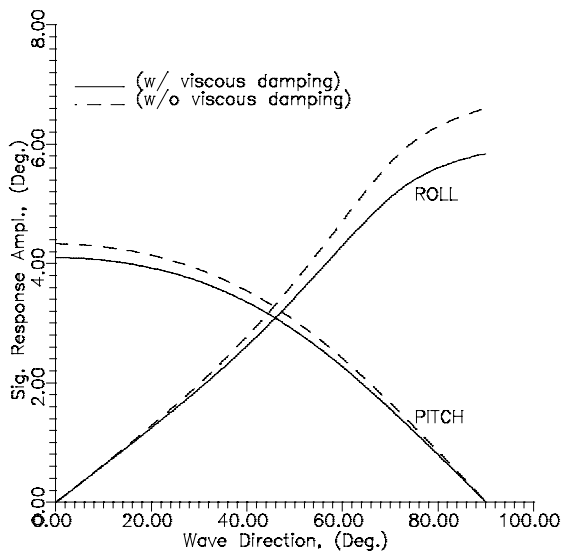

Figure B-15. Effect of viscous damping on roll and pitch response, sea state 2.5, 1 module.

3.5 Relative Motion of Two Modules

The connection of a pair of modules is one of the most critical factors in carrying out the assembly of modules into barges. Thus, a study has been undertaken to compute the relative motion of two modules as they approach each other. In this instance the absolute motion is not of major concern but the relative motion of the mating end of the modules is of interest.

As far as the hydrodynamics is concerned, the simplest approach to the analysis of the relative motion of two modules is to compute the motion of each barge in isolation (but shifted in position). The more realistic method, however, is to compute the relative motion of the two modules accounting for the hydrodynamic interaction of the two modules. That is, each module diffracts the incident wave and, in addition, radiates waves due to its motion. This hydrodynamic interaction is important when the barges approach each other and is included in the complete analysis used herein. Both methods have been carried out here in order to evaluate the importance of the interaction effects in the analysis. The results show that these hydrodynamic interaction effects are rather significant.

Figure B-16 shows the definition of the relative heave of the two modules, and relative surge and sway are similarly defined. The relative motion is computed for points on the mating ends. The primary motions considered are the relative surge, heave, and sway motions.

Figure B-17 shows the relative head sea surge and heave RAOs for two modules. In this figure, head sea refers to the wave direction aligned with the 40-foot dimension of the modules (head sea) and, accordingly, in this case there is no relative sway motion, only relative surge and heave. The results shown in Figure B-17 demonstrate the effect of the hydrodynamic interaction of the modules when they are separated by 10 feet in head seas. While the surge motion is essentially unaffected by the interaction, the interaction has a major effect on the relative heave response. It appears that the reflection of the wave or radiated wave from one module tends to excite the relative heave motion of the other.

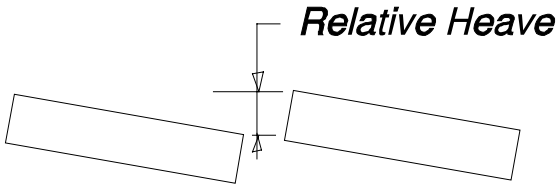

Figure B-16. Relative motion of two modules.

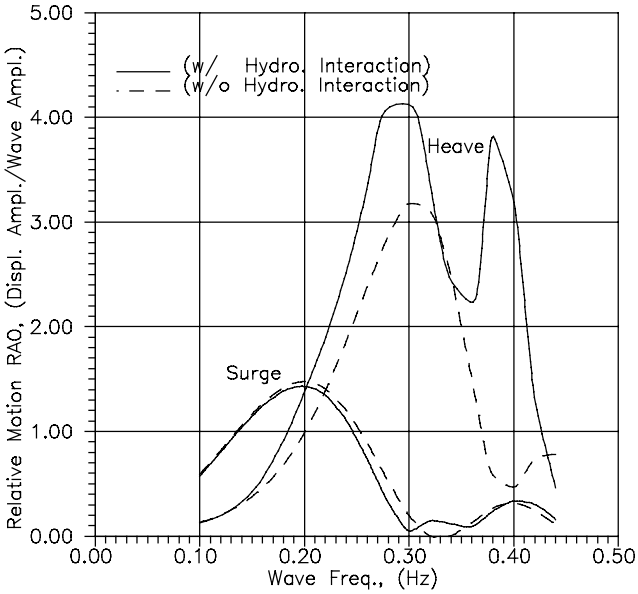

Figure B-17. Relative motion RAOs for points on the mating ends - module separation dist. = 10.0 ft - head seas.

Figure B-18 shows the relative response of two modules in head seas when the separation distance is reduced to 5.0 feet. As can be seen from these results, the effects of the interaction of the two modules increase as the separation distance decreases in the case of heave (or vertical) motion. The interaction effects on the relative surge motion are minor, but in the case of heave the effects are rather significant.

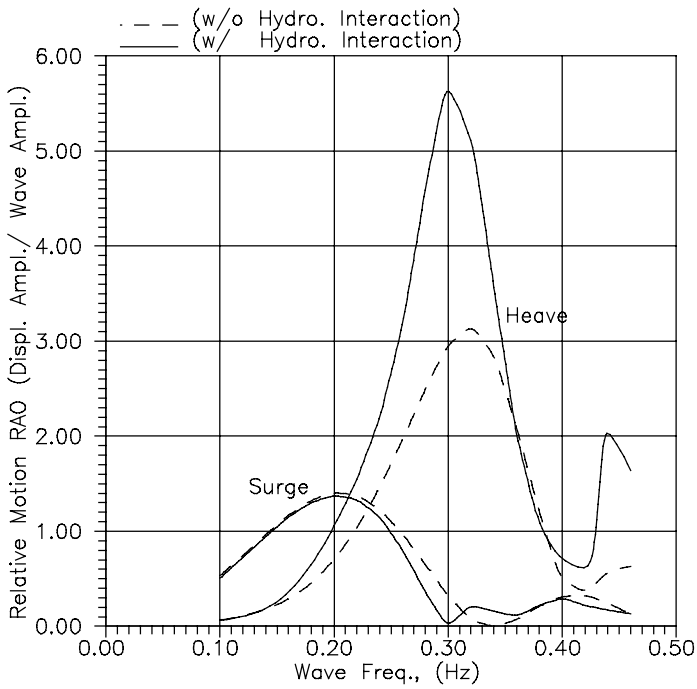

Figure B-18. Relative motion RAOs for points on the mating ends - module separation dist. = 5.0 ft - head seas.

Figures B-19 and B-20 show results for the relative motion at the mating end of two modules in quartering seas (45-degree wave direction). In general, the relative motion is considerably smaller at 45 degrees than for the head seas case. Also, the added effects of interaction are also reduced relative to the head seas case. In general, the results show the interaction effects to be small for surge and essentially zero for sway.

The results of the relative motion study show that the proximity of one module to the other tends to increase the relative motion. This would tend to exacerbate the connection operation since the object in this situation is to bring the modules together for final connection. Clearly, a method to resist this relative motion must be developed to force the mating ends to move together progressively as the modules approach each other.

In general, all of the relative motion results indicate that 0.30 hertz (wave period = 3.3 seconds) represents the critical wave frequency. The pitch resonance that occurs at this frequency causes the peak relative motion at the mating ends of the modules.

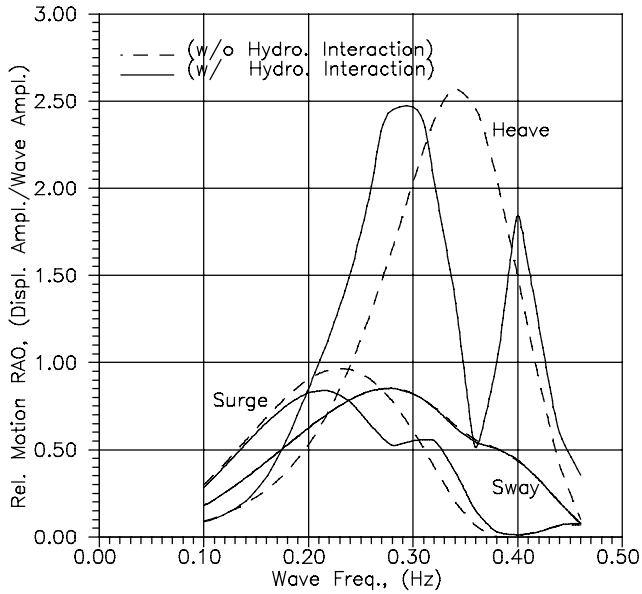

Figure B-19. Relative motion RAOs for points on the corner of the mating ends - module separation dist. = 10.0 ft - wave dir. = 45 deg.

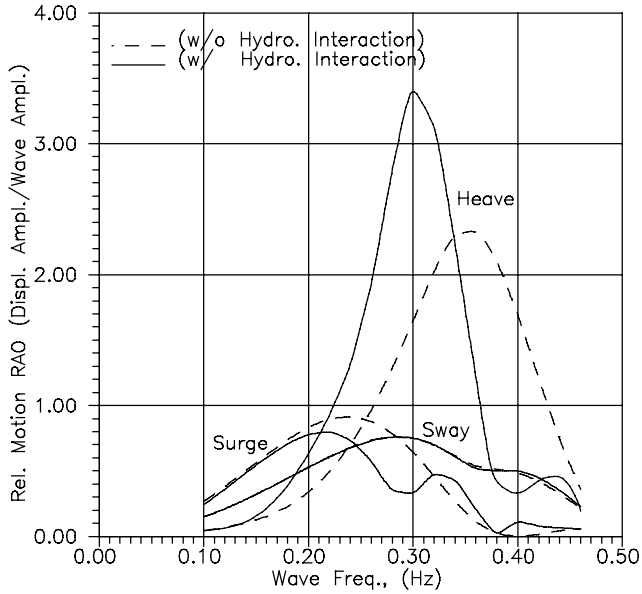

Figure B-20. Relative motion RAOs for points on the corner of the mating ends - module separation dist. = 5.0 ft - wave dir. = 45 deg.

3.6 Effects of Water Depth

The bulk of the analyses presented in this report assumes infinite water depth. The water is typically fairly deep in the assembly area and the waves are short at sea state 3.0, and for this reason the infinite depth assumption is applicable to most cases. However, in order to assess the effect of shallower water on the hydrodynamics of the modules, Figure B-21 has been prepared. The figure compares the surge and heave RAO for a single module in head seas in order to demonstrate the magnitude of the effect.

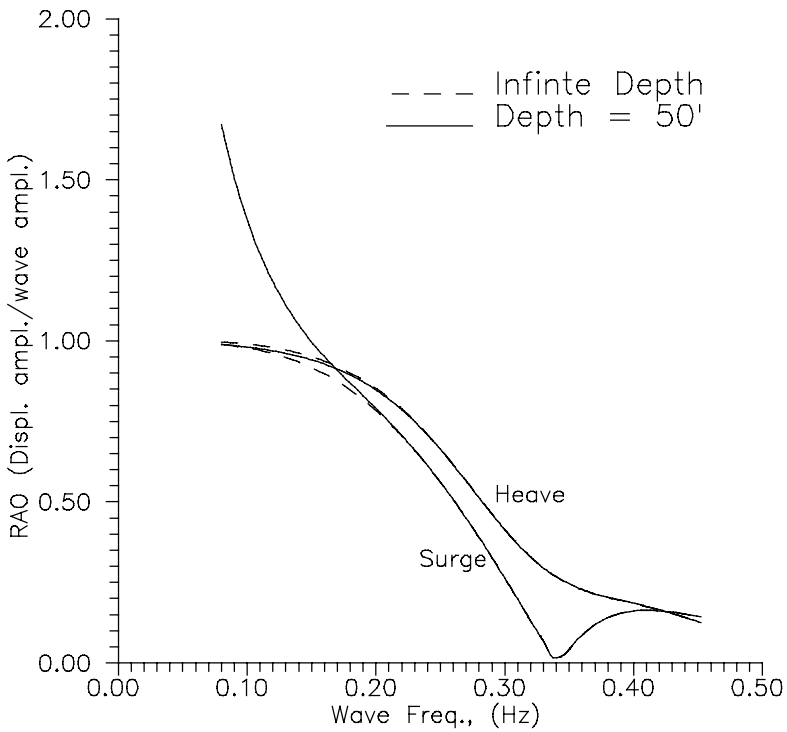

Figure B-21. Effects of finite depth on the surge and heave RAO.

The results presented in Figure B-21 show that the effect of water depth is negligible with the exception of the surge RAO at wave frequencies less than 0.20 hertz. At very low frequency (long waves), the surge displacement is increased due to the elliptical orbital fluid particle motion which occurs at finite depth. The effect of depth shown in Figure B-21 is expected since the wave motion decreases exponentially with depth such that it becomes negligible at a depth greater than 1/2 the wave length and the deep water wave length is by $L = 5.12T^2$. This indicates that the effect of depth should be negligible for a 50-foot depth for $T < 3.12$ seconds (or frequency > 0.32 hertz). The results actually show, for practical purposes, a negligible effect for frequency > 0.20 hertz.

4.0 DYNAMIC RESPONSE OF MODULES RESTRAINED BY MOORINGS

4.1 Dynamic Cable Tension During Interfacing of Modules

In preceding sections, the dynamic response of free-floating modules and barges has been considered both when the module is in isolation and when modules approach each other so that they mutually interact with each other. Results of these analyses have shown considerable hydrodynamic interaction effects between pairs of modules. In this section the mooring of two modules is addressed. The concept of bringing modules together for connection by use of an interconnecting cable is studied.

Results of the analyses presented in this section relate to two modules connected together by a stiff cable. In addition to the interconnecting cable, a constant separation force is provided to the modules by additional mooring lines since this separation force is considered to be a necessary condition if snap-loading of the interconnecting cable is to be avoided. That is, if two modules are pulled together by a cable while responding to wave motion, the natural tendency will be for the cable to become slack and then suddenly become loaded as the modules respond to waves. This sort of snap-loading will cause huge loads in the cable and other parts of the structure and, either must be avoided entirely, or provisions must be made to accommodate this phenomenon.

To be specific in regard to the conditions in the present study, the two modules are moored as described in Figure B-22, where the two modules are connected together by a stiff cable and a separation force is applied by long mooring lines. The separation force is supplied by essentially constant tension mooring lines since the line spring constant (line stiffness) was taken to be very small, but with a fixed pretension. However, the line connecting the modules had a stiffness of 5.0×10^6 lb/ft elongation/ft of line. That is, for a 20-foot separation distance the connecting line was represented by a spring with a spring constant of 2.5×10^5 lb/ft and for a 10-foot separation distance the same line material resulted in a spring constant of 5.0×10^5 lb/ft. The latter value of the effective stiffness was double that of the 20-foot interconnecting line due to its reduced length.

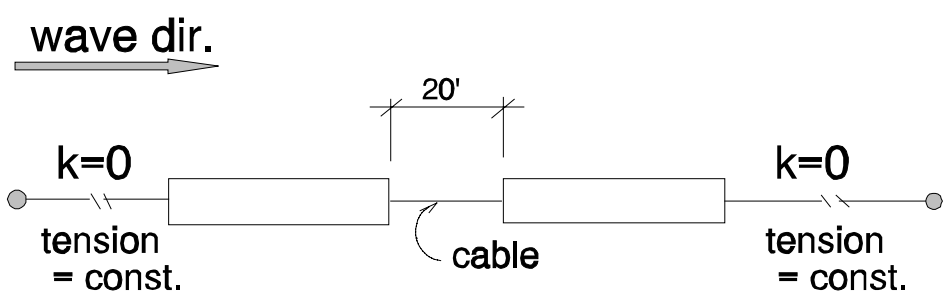

Figure B-22. Mooring configuration.

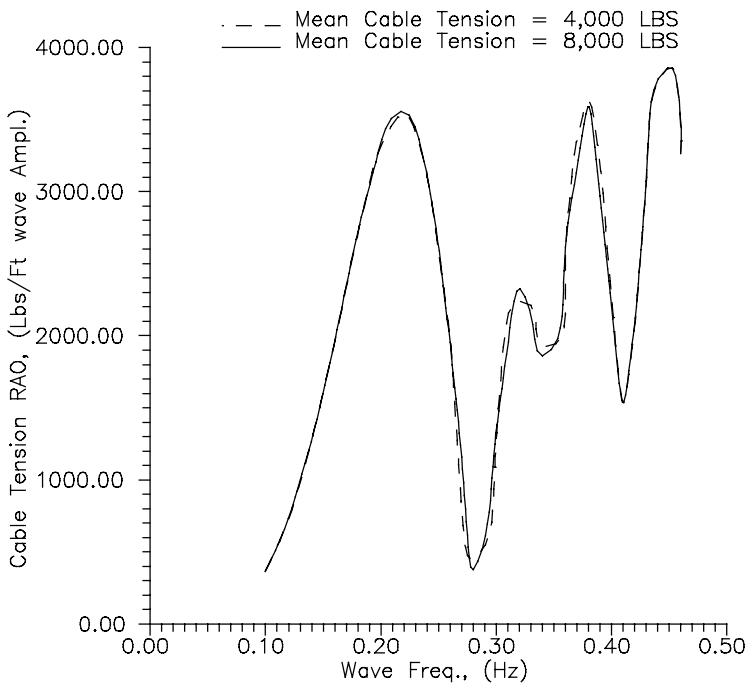

Figure B-23. Connecting line tension RAO - 20-foot separation dist., head seas.

The cable tension RAO results which are shown in Figure B-23 for both a mean cable tension of 4,000 pounds and 8,000 pounds, indicate that the RAO is essentially independent of the mean cable tension at a 20-foot separation. This is apparently due to the hydrodynamic nature of the shallow-draft barge. The heave-pitch motion is controlled almost completely by the large bottom surface of the barge upon which the hydrodynamic pressure acts. This is due to the fact that the bottom area is large and the cables have a mean horizontal orientation. A second feature of the dynamics of the interconnected modules is also important to note. The connecting cable is fairly stiff (stiffness equivalent of a 0.5-inch-diameter solid steel rod) and this places the surge resonance of the two modules far above the wave excitation frequency. This is equivalent to connecting the two modules together rigidly since their relative surge motion (amplification) is negligible. Accordingly, it is not necessary to study the effect of variations of the interconnecting line stiffness since the present results show that it will have no influence on the tension provided it is relatively stiff, as it is in the present case.

The cable tension RAO results, which correspond to a 10.0-foot module separation distance, are shown in Figure B-24 for a mean cable tension of 8,000 pounds. These results indicate that the RAO is not too dissimilar in magnitude to the corresponding results at a 20-foot separation distance with a similar peak value of about 3,600 lb/ft wave amplitude near 0.20 hertz.

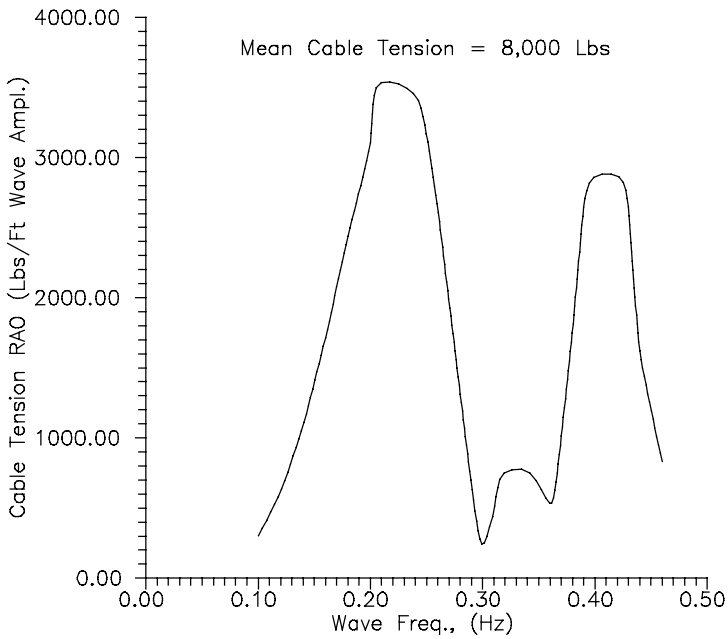

Figure B-24. Cable tension RAO - 10.0-foot separation dist., head seas.

4.3 Drag of Barges

The drag of a barge shape at a low Froude number is primarily a result of the separation at the bow. The viscous drag (or skin friction drag) is typically relatively small, and this is particularly true in the case of short barges. The term "short" here refers to barges where the wetted surface area is not large relative to the projected frontal area (this is the case in the present barge). In view of this drag mechanism which is dependent on the bow shape, the drag coefficient based on frontal area is essentially independent of a Froude number up to a Froude number of about F = 0.25.

Based on the test data of Hay (1946, 1947, 1950), Hoerner (1965) has presented the barge drag coefficient based on frontal projected area. The definitions relating to this data are shown in Figure B-25. Results presented by Hoerner are similar to those shown here as Figure B-26. In the figure, the drag coefficient is plotted against the ratio of the radius of the forefoot to draft. The results show that for a box-shape (sharp forefoot corner), the drag coefficient is about:

$$C_{Do} = 0.95 \text{ (sharp corner)}$$

and decreased to about:

$$C_{Do} = 0.40$$

as the radius is increased. Thus, this test data shows that rounding of the forefoot can slightly more than halve the drag of a box-like barge.

L/B = 5
h/L = .067 - .40
r = forefoot radius
B = beam

Figure B-25. Barge particulars.

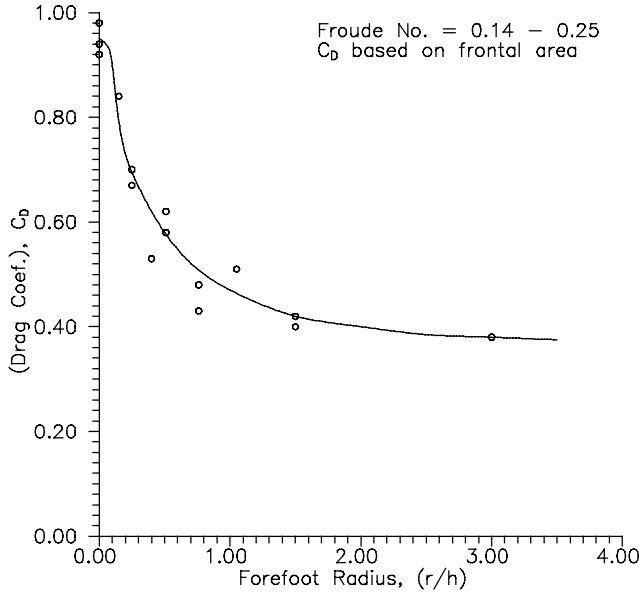

Figure B-26. Barge drag coefficient.

Figure B-26 is valid for Froude numbers up to approximately 0.25 and in the present case, for a 40-foot-long barge, this corresponds to a speed of 9.0 ft/sec or approximately 5.4 knots. As the Froude number (or speed) is increased beyond this value (0.25), the drag coefficient tends to increase slowly with Froude number due to wave-making.

Using the low Froude number drag coefficient data from Figure B-26, the following figure, Figure B-27, has been prepared to show the (mean) tow-line tension required to tow the 25- by 40- by 8-foot module with both a sharp-cornered forefoot and a well-rounded forefoot.

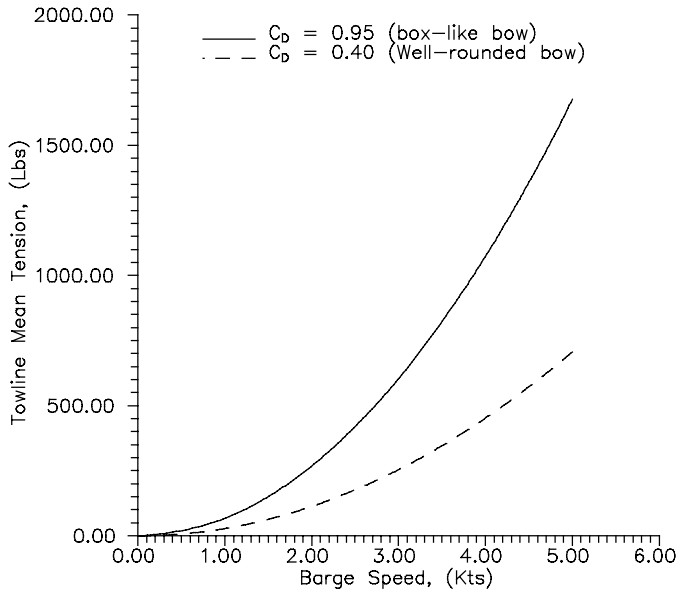

Figure B-27. Mean towline tension - single module.

These results show that for a box-like bow the mean towline tension (drag) is 1,676 pounds and is reduced to 706 pounds for a barge with a well-rounded bow when both are towed at 5.0 knots. This value of mean tension is far less than that required to avoid snap-loading as discussed in Section 4.1.

4.4 Mooring Requirements During Interfacing

The above results, in application to the interfacing of the modules to form barges, indicate that, at least in head seas, a rather large mean line tension will have to be applied to avoid snap-loading, i.e., the slack-line situation. A 5.0-foot wave at a period of 5.0 seconds (0.20 hertz) would produce a dynamic line tension of about 9,000 pounds. This indicates that a mean line tension of well over 9,000 pounds would be necessary to avoid the line going slack and snap-loading occurring. The results of Section 4.3 indicate that towing at speeds of up to 5.0 knots will produce far too little mean line tension to avoid snap-loading.

It should be noted that the analysis that has been carried out above (Section 4.1) is based on linear theory. Thus, there is a limitation on the angle of the cable relative to the horizontal among other assumptions commonly associated with linear analysis. In the linear theory, the angle the cable makes with the horizontal is assumed to be small while, at the same time, the results of calculations indicate that the relative heave motion of the two modules is rather large. Thus, the linear theory limits the minimum distance between the two modules at which calculations can be accurately made since the angle increases as the distance decreases. For this reason, the calculations for the connecting line tension RAO have been terminated at a minimum module separation distance of 10.0 feet. The dynamic line tension analysis, which includes the nonlinearity of large line angles, could indicate an even larger dynamic line tension and, accordingly, require a larger mean tension in order to avoid snap-loading.

REFERENCES

Faltinsen, O.M., and F.C. Michelsen (1975). "Motion of large structures in waves at zero Froude number," International Symposium on Marine Vehicles and Structures in Waves, 1975.

Garrison, C.J. (1974). "Dynamics of floating bodies," Offshore Technology Conference, Paper No. OTC 2067, Houston, TX, 1974.

Garrison, C.J. (1974). "Hydrodynamics of large objects in the sea, Part I - Hydrodynamic analysis," Journal of Hydronautics, 1974.

Garrison, C.J. (1993). MORA user's guide, C.J. Garrison and Associates, 1993.

Garrison, C.J., et al. (1970). "Wave interaction with large submerged objects," ASCE National Structural Engineering Meeting, Portland OR, Paper No. 1222, 1970.

Garrison, C.J., et al. (1974). "Wave forces on large-volume structures - A comparison between theory and experiment," Offshore Technology Conference, Paper No. OTC 2137, Houston, TX, 1974.

Hay (1946). Tank tests, Princeton University, Engineering Report. Princeton, NJ, 1946.

Hay (1947). Parallelpipodons, Princeton University, Engineering Report. Princeton, NJ, 1947.

Hay and Runyon (1950). "Blunt forms," Maritime Engineer Naval Architecture, 1950, p 339.

Hoerner, S.F. (1965). Fluid-dynamic drag. Brick Town, NJ, published by author, 1965.

Kato, H. (1958). "On the frictional resistance to roll of ships," Society of Naval Architects of Japan, 1958.

Schmitke, R.T. (1978). "Ship sway, roll, and yaw motions in oblique seas," in Transactions of the Society of Naval Architects and Marine Engineers, 1978.

Tanaka, N. (1961). "A study of bilge keels - Part 4 on the eddy-making resistance of the rolling of ships," Society of Naval Architects of Japan, 1961.

Appendix C

RESULTS OF BRAINSTORMING SESSION ON OPEN SEA MODULE CONNECTION TECHNOLOGY

This Appendix documents the results of a brainstorming session on open sea module connection technology held on 14 January 1993 at Naval Civil Engineering Laboratory (NCEL). The purpose was to gather in-house expertise of pontoon system operations to explore applicable technology of joining floating modules in open seaways. The attendees included senior technical personnel, who have extensively participated in the development, analysis, design, management, and operation of the Navy's pontoon system.

DATE: Thursday, 14 January 1993.

LOCATION: Seminar Room II, Naval Civil Engineering Laboratory.

AGENDA:

0900 to 0930	Opening Comments - Erick Huang
	ACB Lighter Overview and ACB/OPNAV Comments - Patrick Kane
	Existing Connector Concepts - Woody Bretz
0930 to 1200	Brainstorming Session Facilitator - Tom Ward

OBJECTIVE: Explore applicable technology and generate potential methods that allow for the open sea assembly of large floating platforms from standard pontoon modules.

ATTENDEES:
CESO/Dan Maechler
L32/Kit Mack L40PM/LT Linda Sellers L41/Chief Taylor
L53/Duane Davis L64/Cliff Skaalen L65/Tom Ward
L65/Woody Bretz L65/Bill Hatch L65/Erick Huang
L65/Pat Kane L65/Billy Karrh L65/Michele Murdoch

RESULTS: Over 100 potential connection concepts and relevant technologies were proposed for discussion during the session. The proposed concepts ranged from systems that are in use for the existing Navy Lighterage pontoons, systems that have been previously explored for use with other military or commercial facilities, and systems that require advanced technology. Although these concepts are different in configuration, they may be grouped in a number of categories according to the primary mechanism used for further evaluation. Representative configurations of each group will be presented to show the features and merits of the concepts.

Drop-in connectors. Connections are made from the deck via drop-in connector units which are locked at the top and bottom. Require precise barge alignment and synchronized module motions. Most of the drop-in components are heavy for rough sea operations. (The number in parentheses refers to the sequential appearance of the concept in the original brainstorming document.) The figures are grouped in order of the major functions of the concept.

* Dog-bone connectors (10, 66)
* Vertical lock pins (tw)
* Mexeflote system
* Rhinohorn (19)

Snap/detente system

* Sliding sleeve connector (62)
* Snap lock (latch) connector (29)
* Snap ring connector (24)
* Toggle bolt connector (31, 16, 86)

Strap, ratchet connector (17)

Watch latch
Ratchet

Projection-recess combinations

With horizontal pins (3, 5, 36, 37, 38, 51, 53, 58, 59, 88)
With vertical pins (2, 40, 80, 82, 89, 94, 23)
Without pins

Latch connectors (11, 20, 46, 47, 74)

Beam/link connectors

* Solid link connectors(92)
* Elastic beams

Hinge connector (84, 99)

* Truss connectors(76)
* P-Series connector
* Pipe connectors

Wedge connectors (67, 83)

Sphere connectors (18)

Pneumatic connectors (79)

Tension members. Tedious/complicated rigging process, time consuming. Some include line/ropes subjected to long term tension load (is not a recommended offshore practice)

* Flexor connector (81, 85, 87)
* Pretension bar connector (44)
* Wire connectors (45, 22)
* Chain connectors (72)

Adhesion connector

* Suction cup connector (34)
* Velcro connector (39)
* Magnetic connector (73)

Partially preconnected module assembly. (50)

Assembling facilities

* Floating mat (43)
* Portable drydock (60)
* Mooring system (71)
* Sloping barge anchor (68)
* Pile support/jackup system (21, 63)
* Assemble in the water with ship cranes (54)

CONCLUSION: There are many possible methods of connecting floating pontoon modules together into large platforms. Each has its functional merits under specific circumstances. Unfortunately, none of these existing methods alone seem capable of joining modules in open seaways without extensive development. Nevertheless, this brainstorming session identified many essential functions of a practical connection system and delineated technology requirements for developing a safe, durable, and operable connection system. The primitive concepts obtained will be processed to combine, delete, add, and modify to formulate more comprehensive concepts for further development. Although much effort can be anticipated down the road, a number of valuable lessons were learned that would serve as general guidelines for the system development. These are:

(a) Open sea connections can be done with the least effort in a multiphase procedure.

(b) A connection procedure requires the presence of delivery ships would retard the entire logistic operation.

(c) Options with assembly facilities will increase the logistic burden to the fleet and make the modular construction capability highly dependent on the arrival of particular delivery ships.

(d) Nonpowered floating units must be moored or controlled by a tender boat.

(e) The connection system must include a method to bring the modules together in a controllable manner. Rigging shall be minimized and, if required, shall be as simple as possible.

(f) The connection system must include a mechanism to suppress the relative motion at the connection faces to ensure a gentle initial contact. Alignment of components for connection must be automated.

(g) The system must incorporate a mechanism to absorb the motion-induced impact forces, such as collision forces between modules or the snap load on tension members.

(h) The system requires an automated lock-in and release mechanism.

MOTION CONTROL OPTIONS

- WAVE ACTION
- MODULE RESPONSE

56

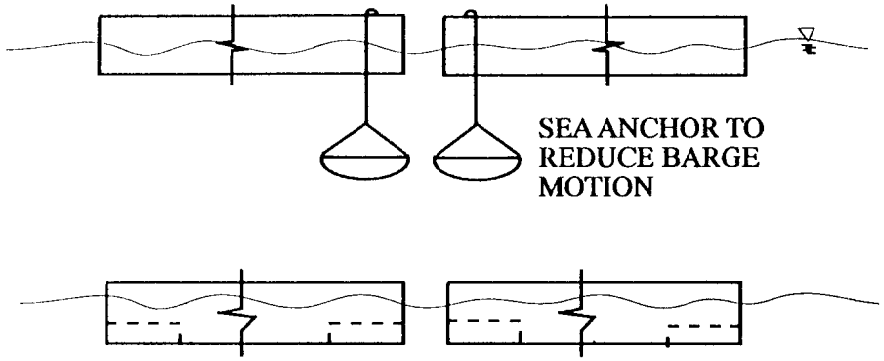

BRK

43

STABILIZATION FOR CONNECTION

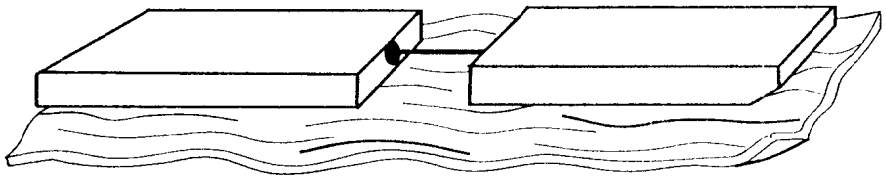

FLOATING MAT

BH

60

PORTABLE DRYDOCK

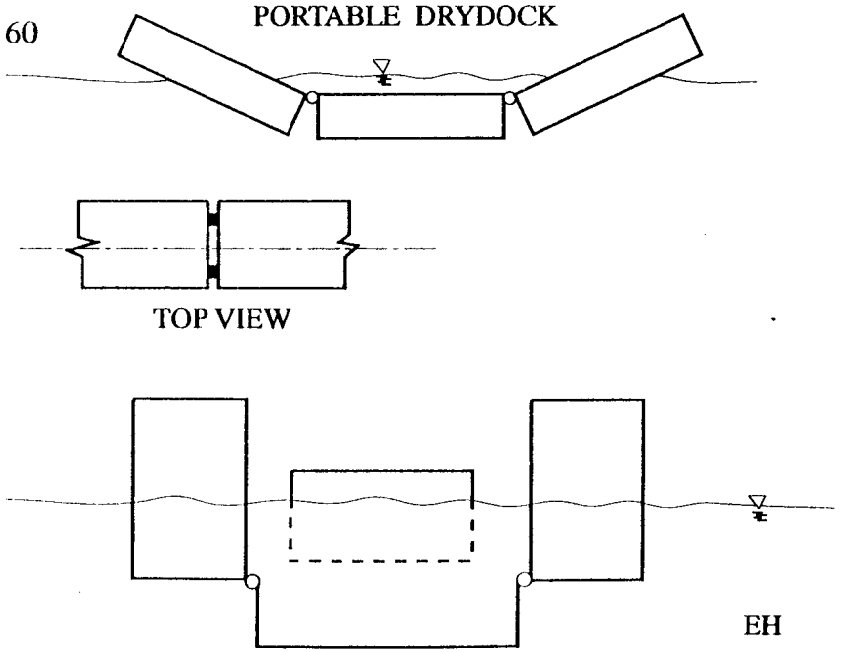

EH

ERIK H./BEN 5/26 94 - 01

61

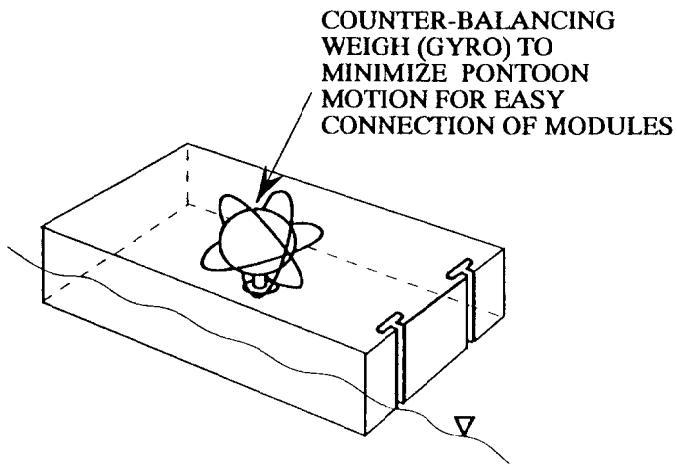

P. KANE

71

USE ANCHORS TO STABILIZE MODULE,
THEN CONNECT, 4 POINT MOOR,
MOVING BUOYS

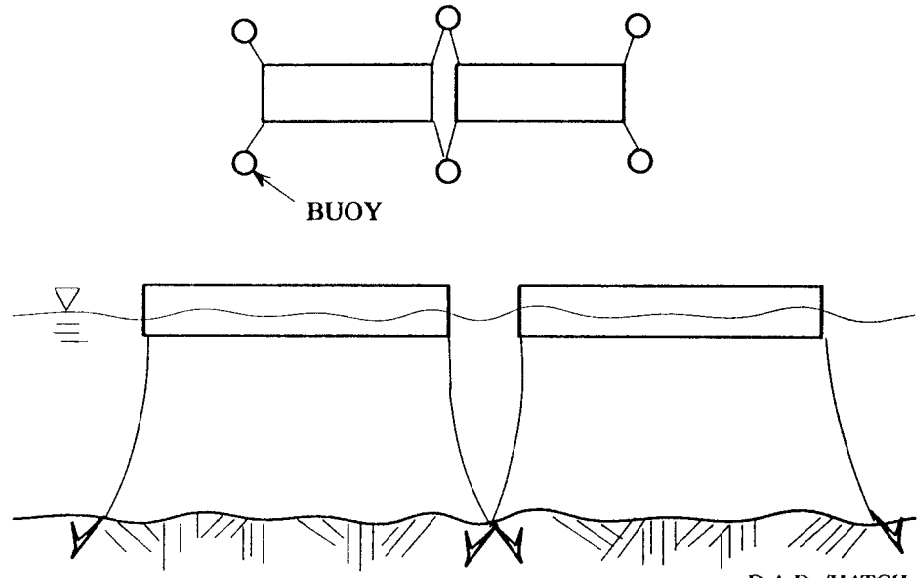

D.A.D. /HATCH

100

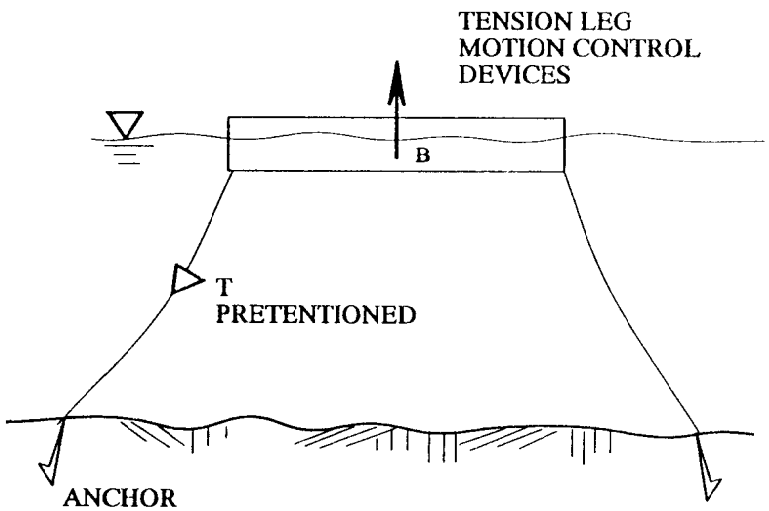

E.H

BRIK H / BEN 5/27/94 - 02

57

FOR SHALLOW WATER

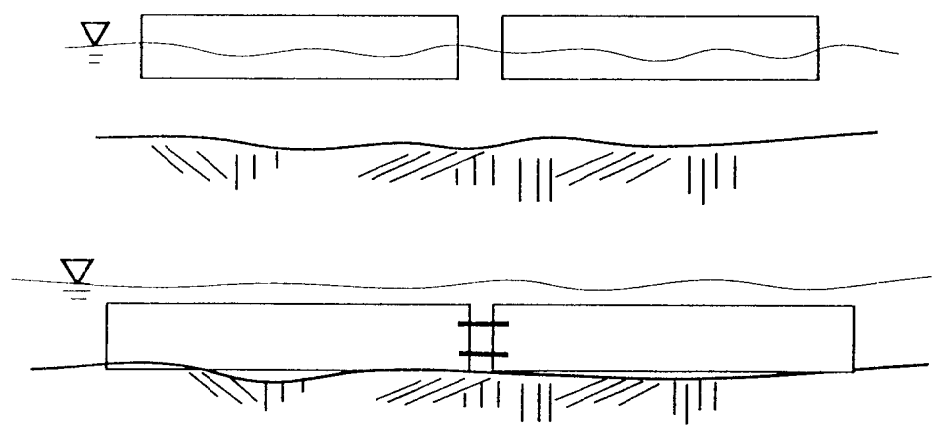

D.A.D.

68

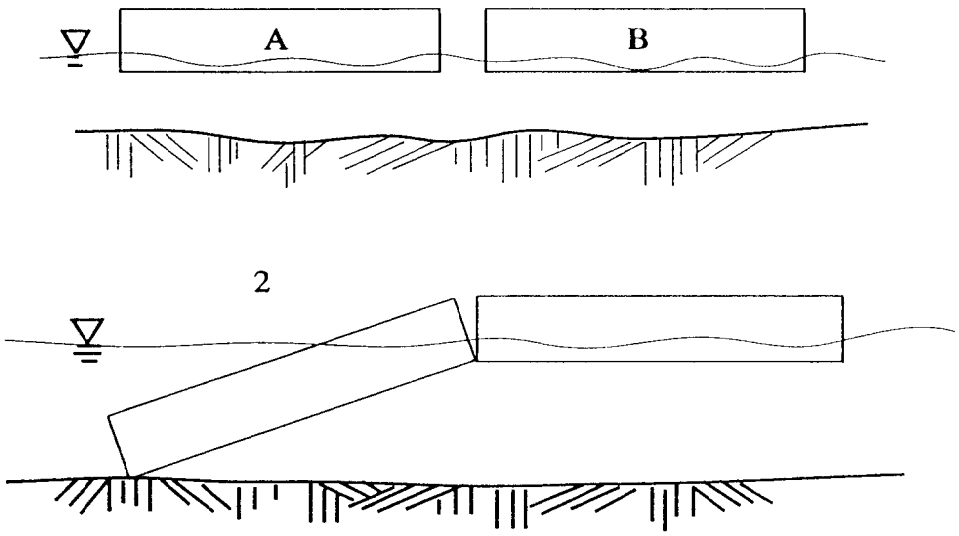

D.A.D.

63

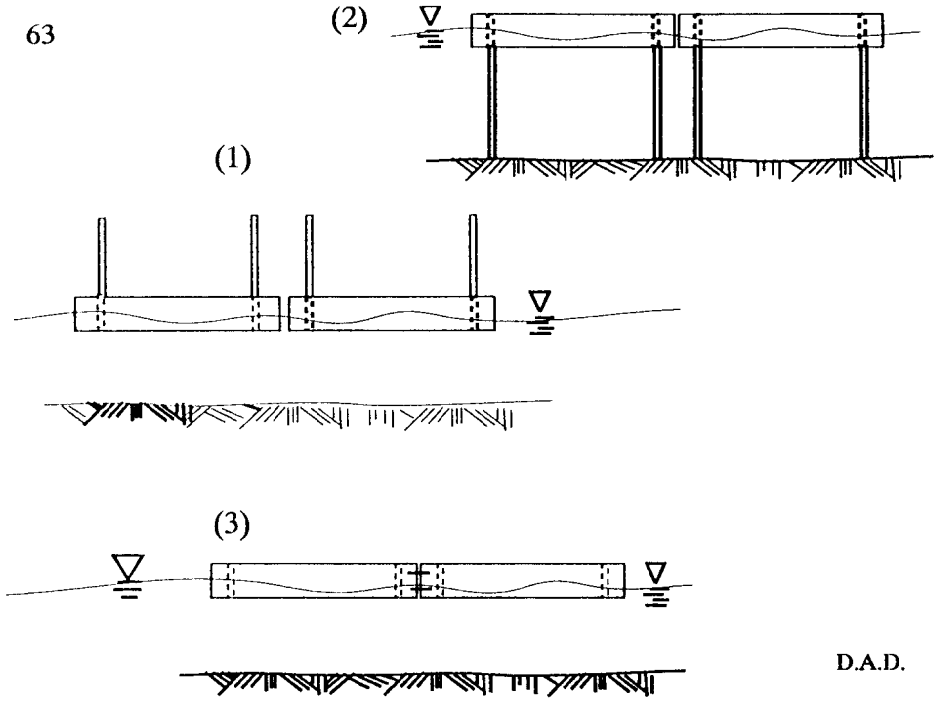

D.A.D.

54

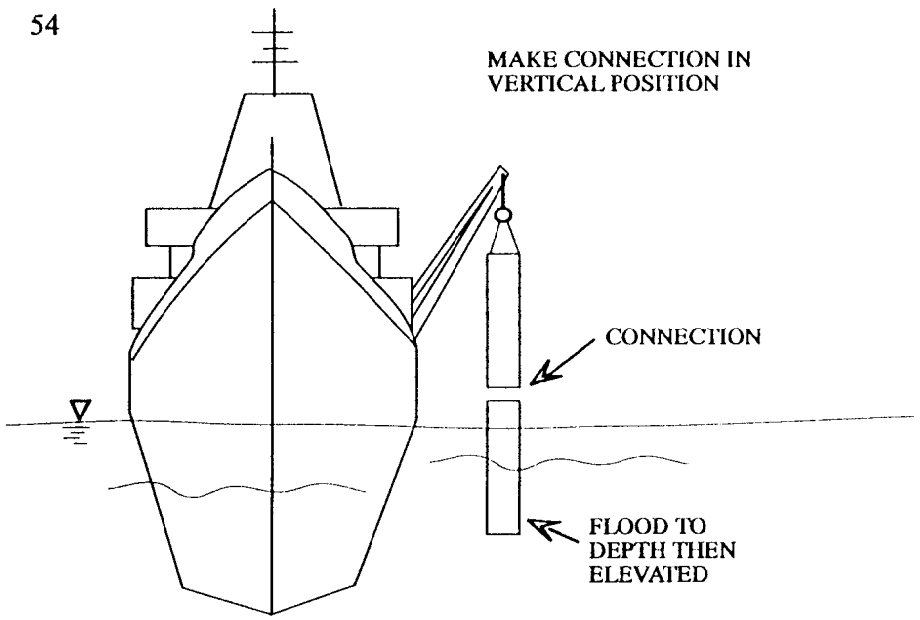

ERIK H. / BEN 5 /27/94 - 03

KM

21

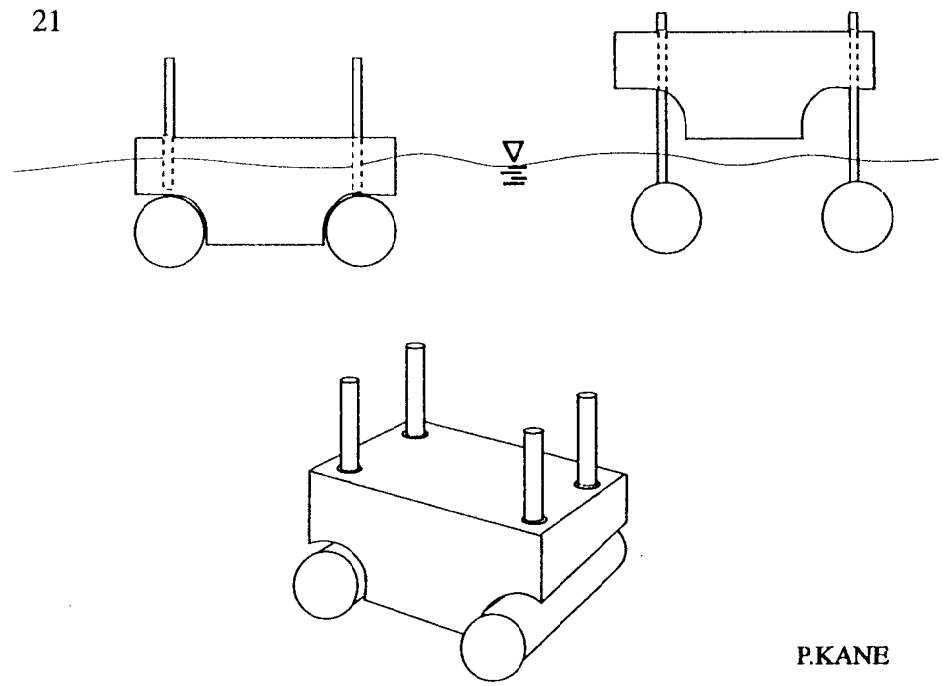

P.KANE

ALIGNMENT OPTIONS

AND

ASSEMBLY AIDS

42

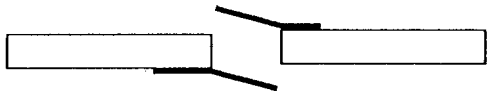

CONNECTION AID

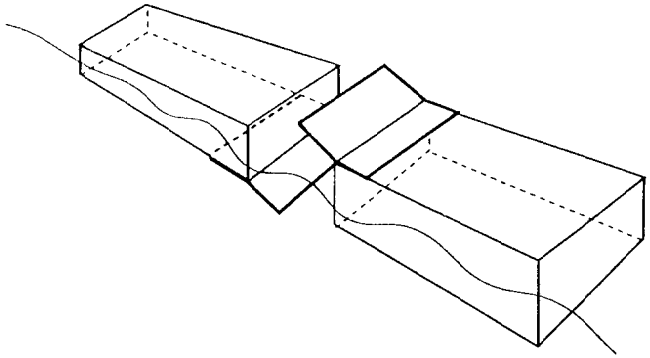

BRK

ALIGNMENT OPTIONS

89

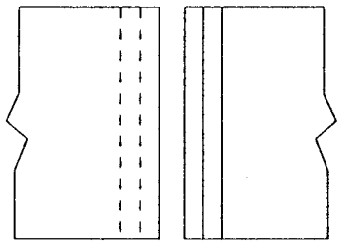

TOP VIEW

LOCKING CONNECTOR

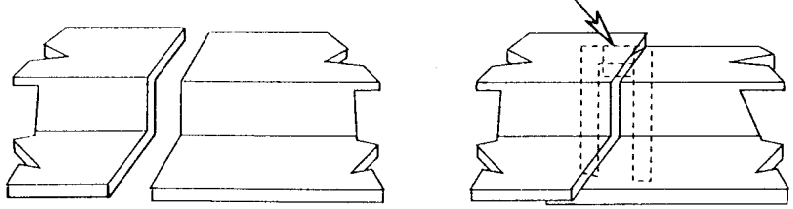

ELEVATION

BK

ERIK H. / BEN 5/27/94 - 04

95

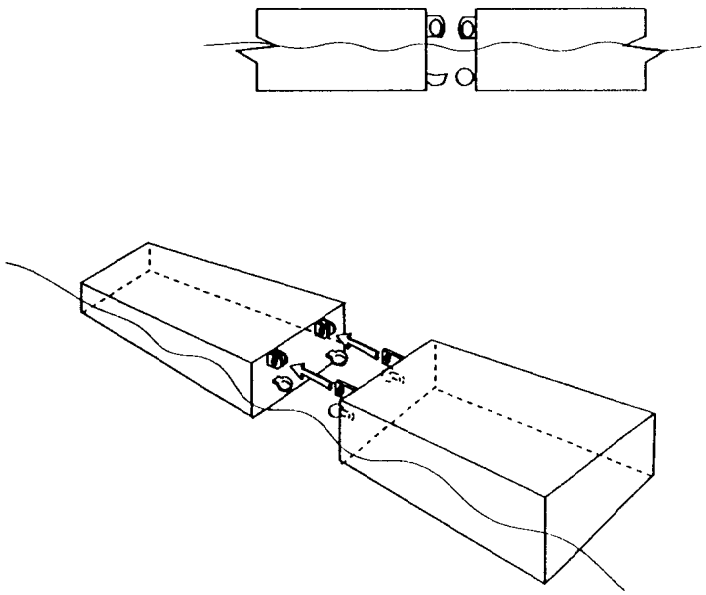

WB

19

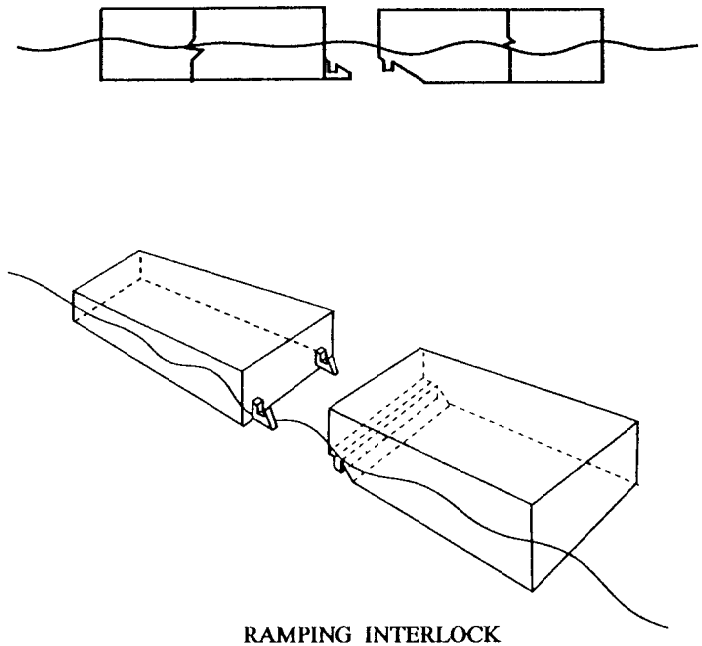

RAMPING INTERLOCK

BR

2

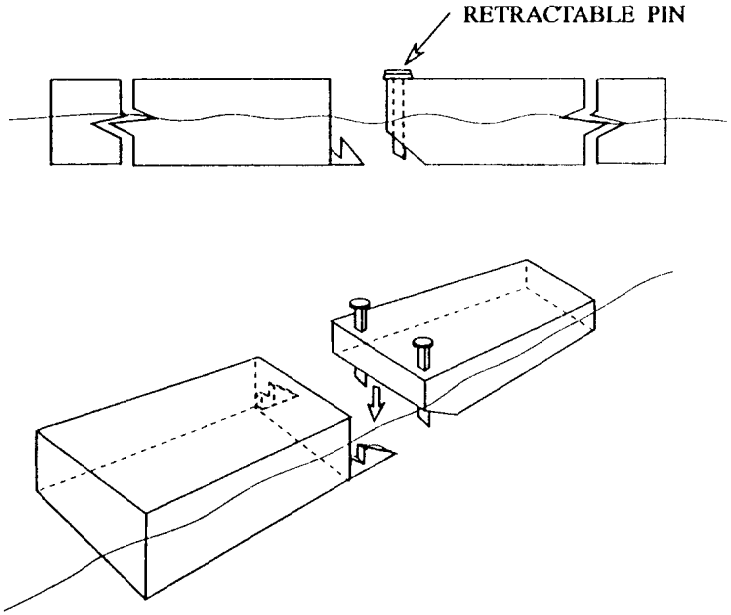

BR

26

A LA TRUCK 5th WHEEL

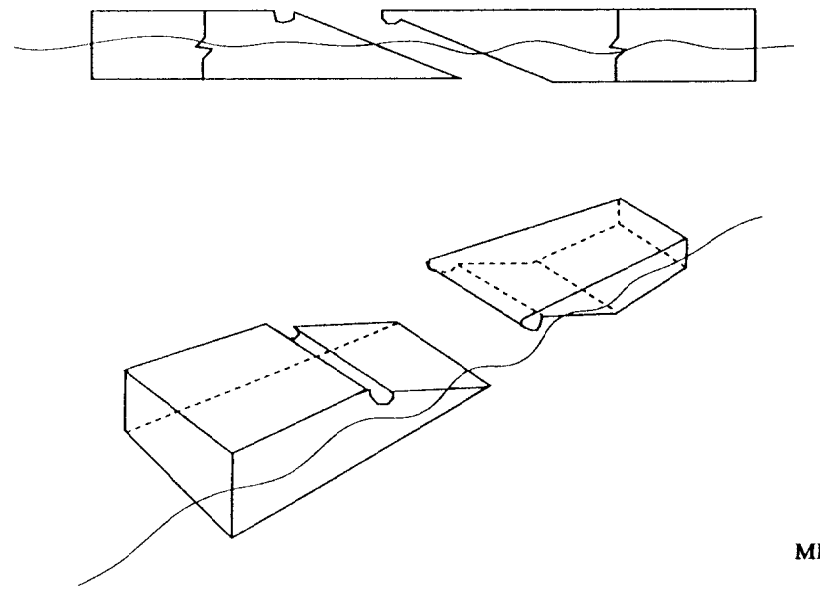

MM

ERIK H. /BEN 5/30/94 - 05

ASSEMBLY AIDS

65

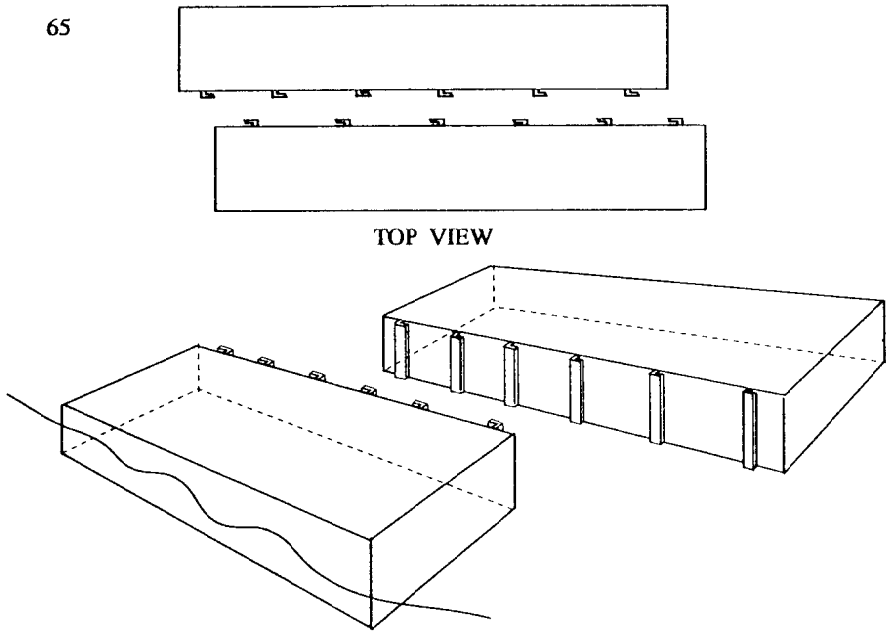

TH

50

HINGED INITIAL DEPLOYMENT

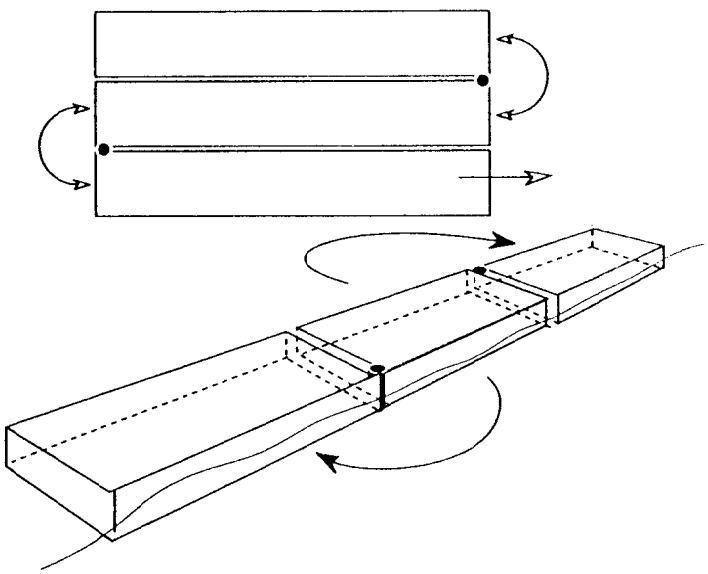

BH

17

STRAP RATCHET

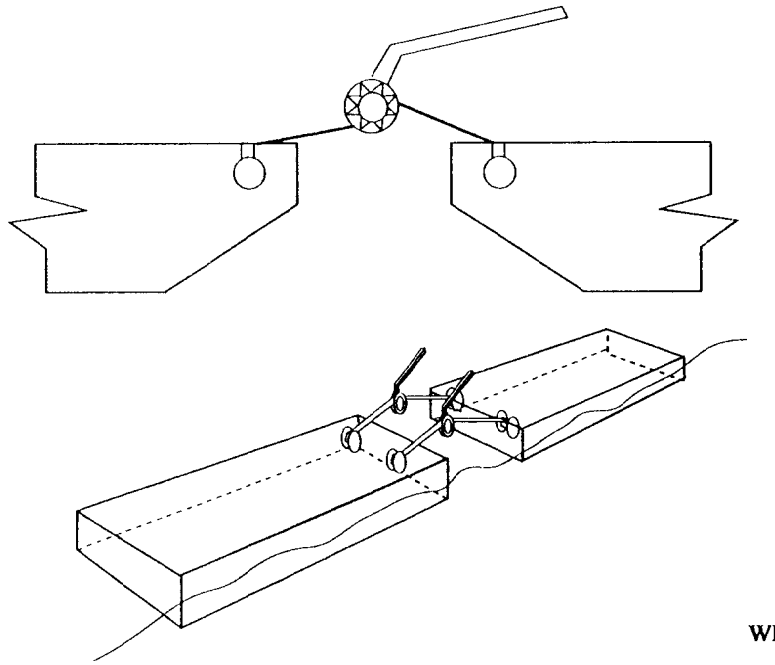

WR

22

FOR LARGE MODULES

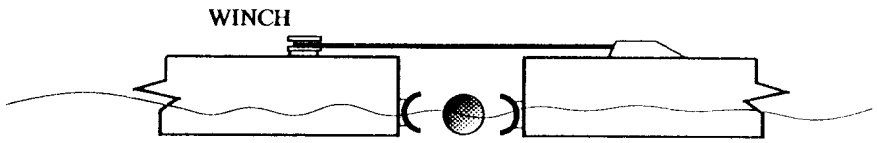

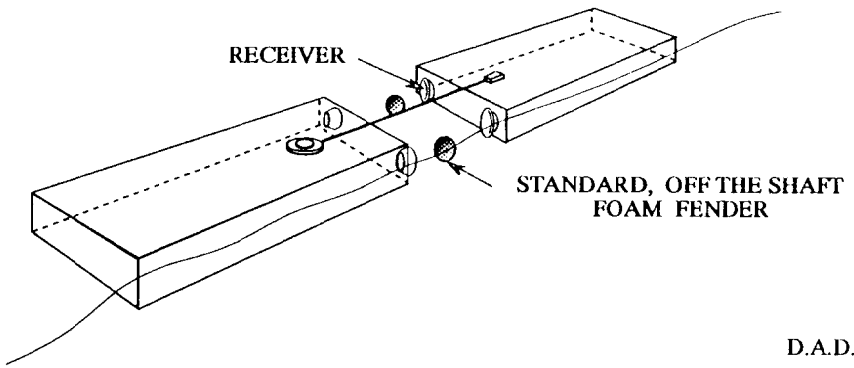

D.A.D.

45

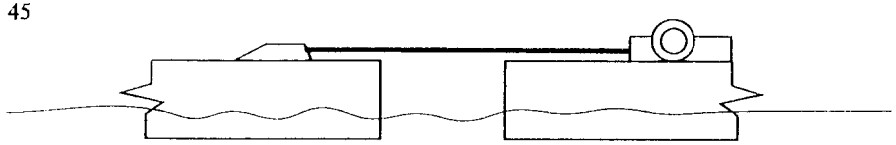

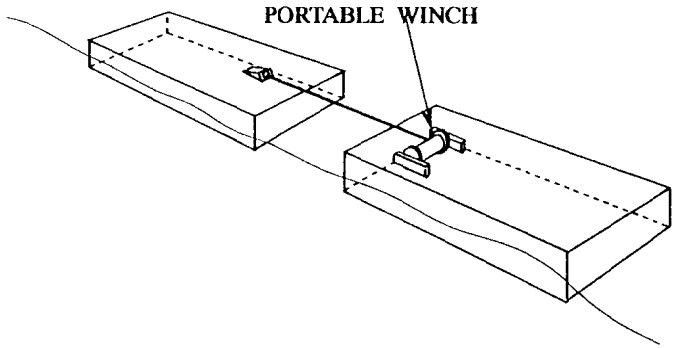

WB

1

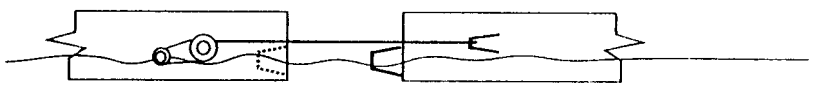

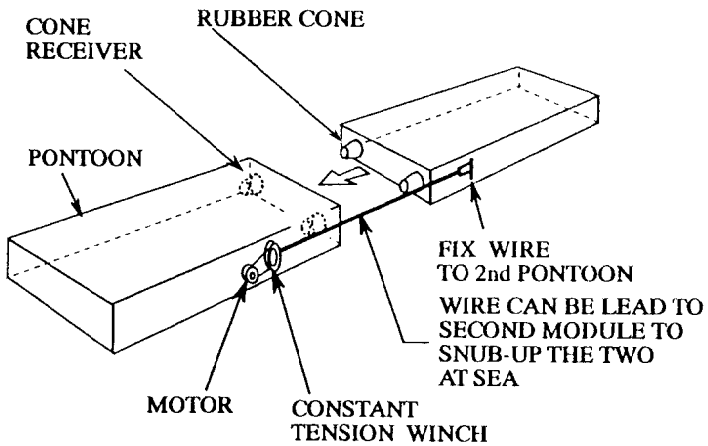

TW

104

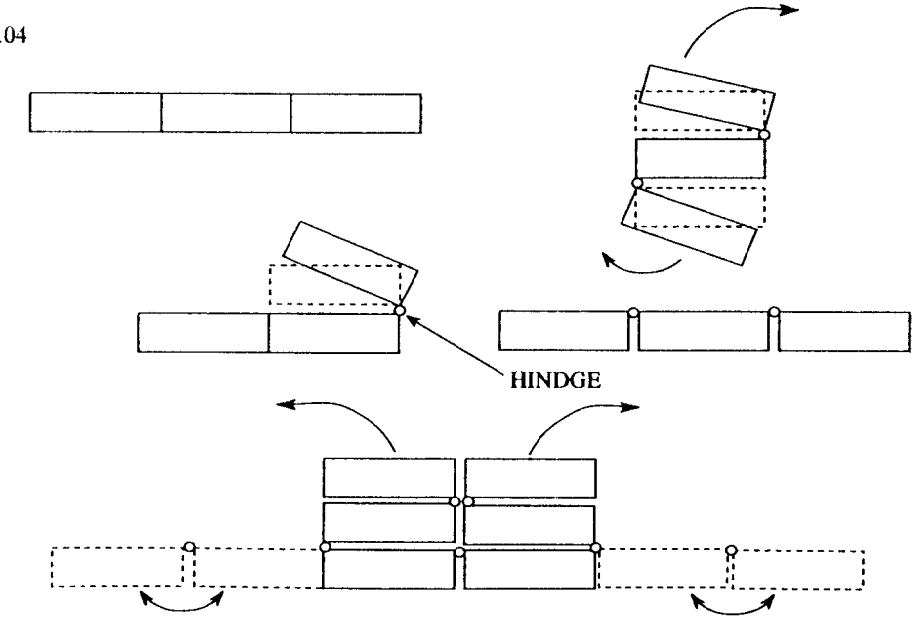

CIS

HINDGE FOR TRANSPORT
OR INSERT HINDGE PINS
DURING A SEA CONNECTION

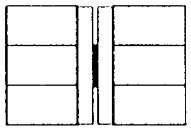

PLAN VIEW

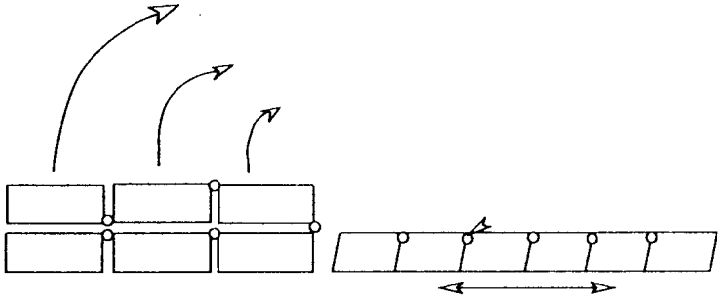

SLOPE FACE TO FACILITATE
HINDGE ALIGNMENT

87

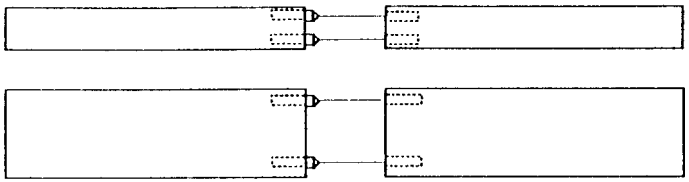

WIRE BRIDLE

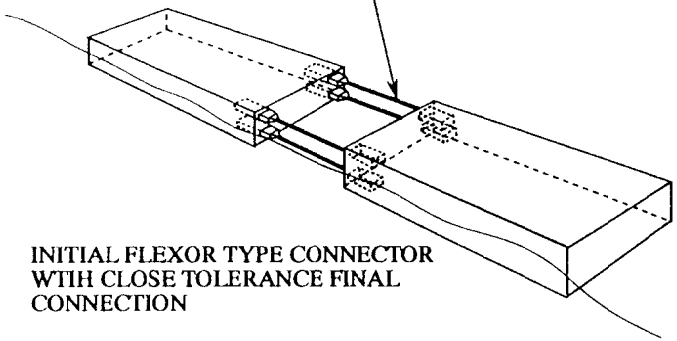

INITIAL FLEXOR TYPE CONNECTOR
WTIH CLOSE TOLERANCE FINAL
CONNECTION

BH

WB

15

SIDE VIEW

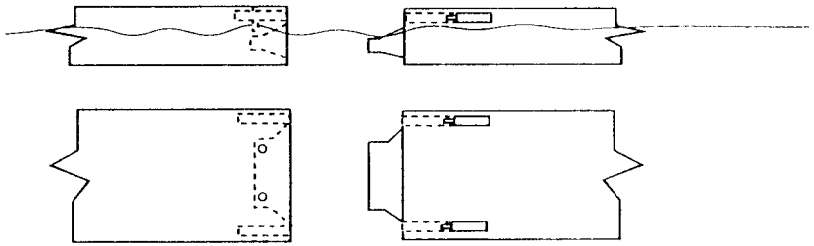

TOP VIEW

USE BRIDLE
TYPE SYSTEM
TO BRING
TOGETHER

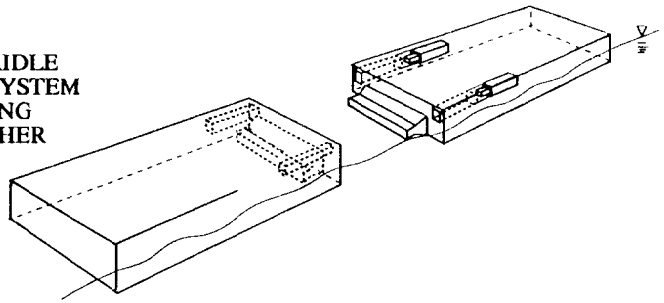

ERIK H. 5 /30 /94 - 08

BRK

CIS

CONNECTOR OPTIONS

27

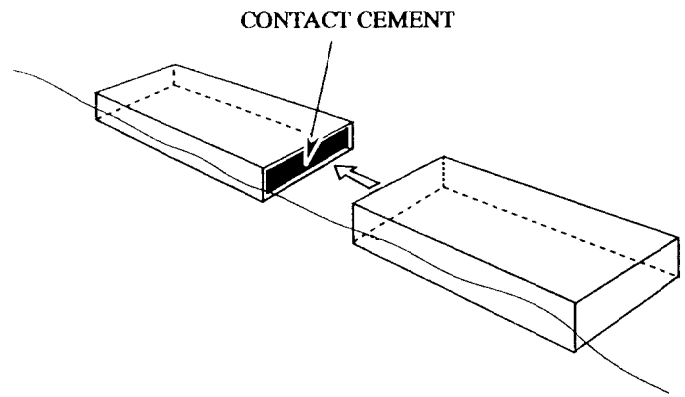

WB

ADHESION

34

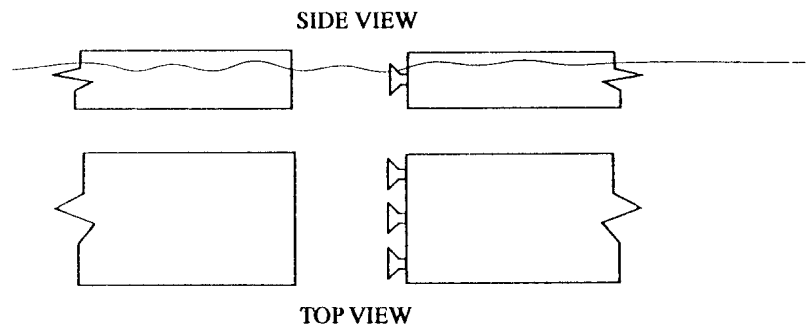

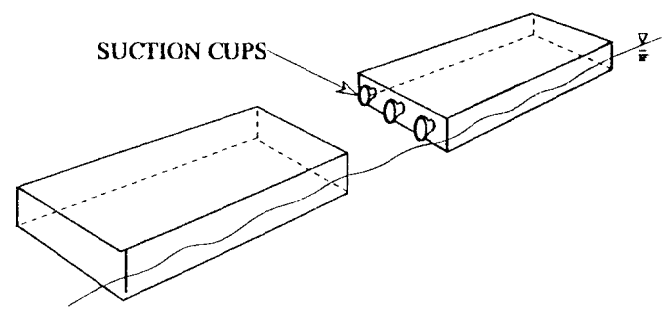

MM

ERIK H. 5/30/94 - 09

75

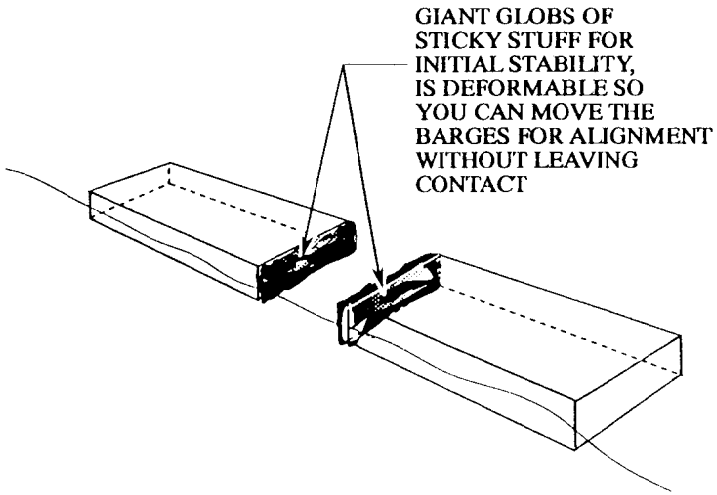

MM

28

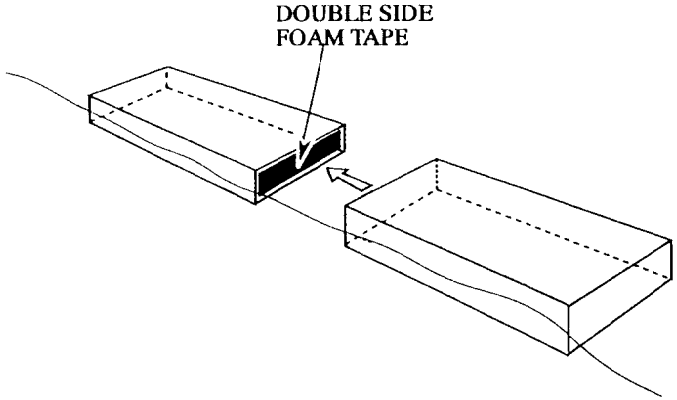

WB

39

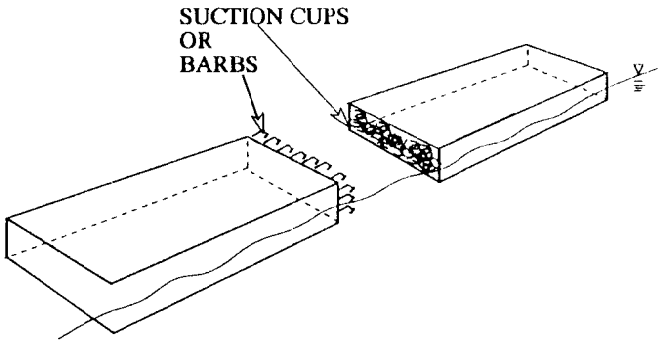

ERIK H. 5/30/94 - 10

WB

BEAM

MM

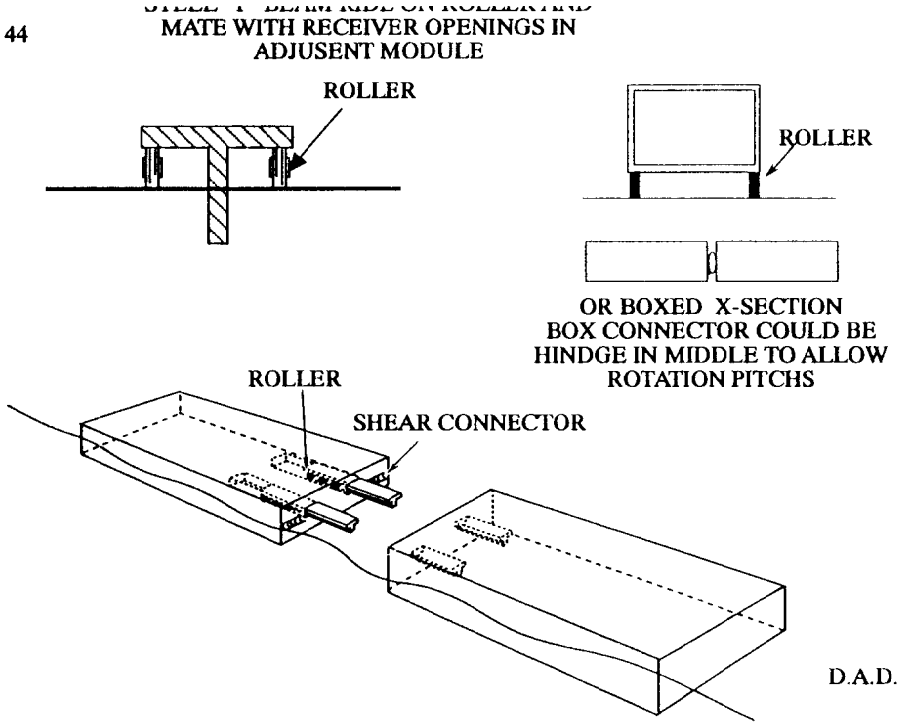

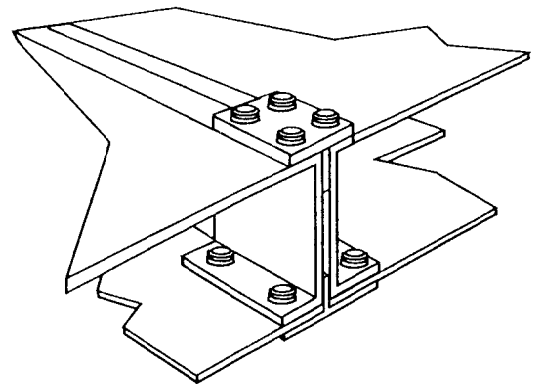

FIGURE 9.

ALTERNATE SIDE CONNECTION ASSEMBLY

BOLTED

DETENT / SNAP

ERIK H. 5/30/94 - 11

62

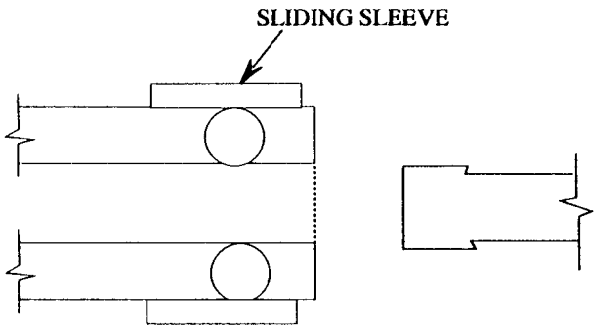

LIKE HYDRAULIC FITTING

WB

31

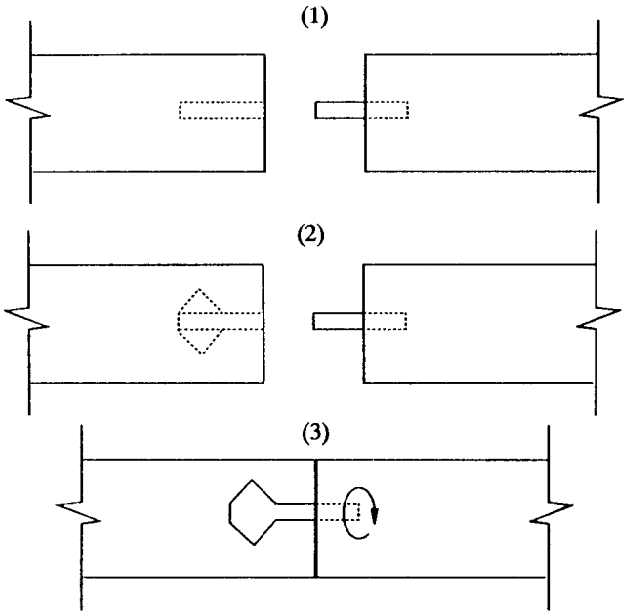

D.A.D.

29

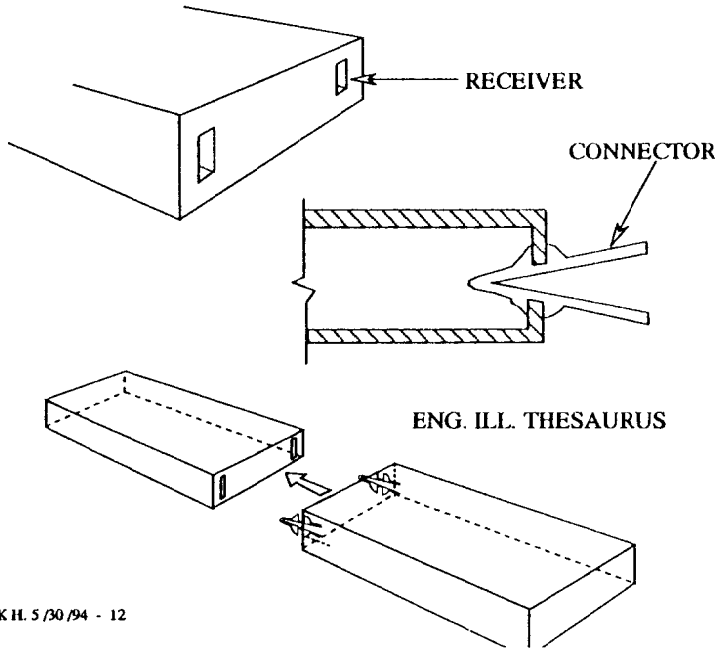

ERIK H. 5 /30 /94 - 12

p 31

30

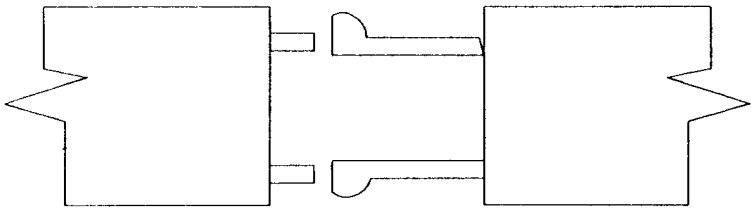

PLASTIC BUCKLE
TECHNOLOGY

WB

24

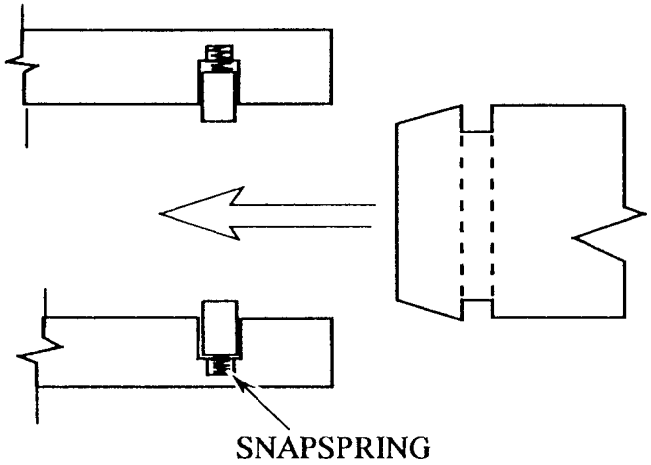

VETCO SQUINCH JOINT

WB

12

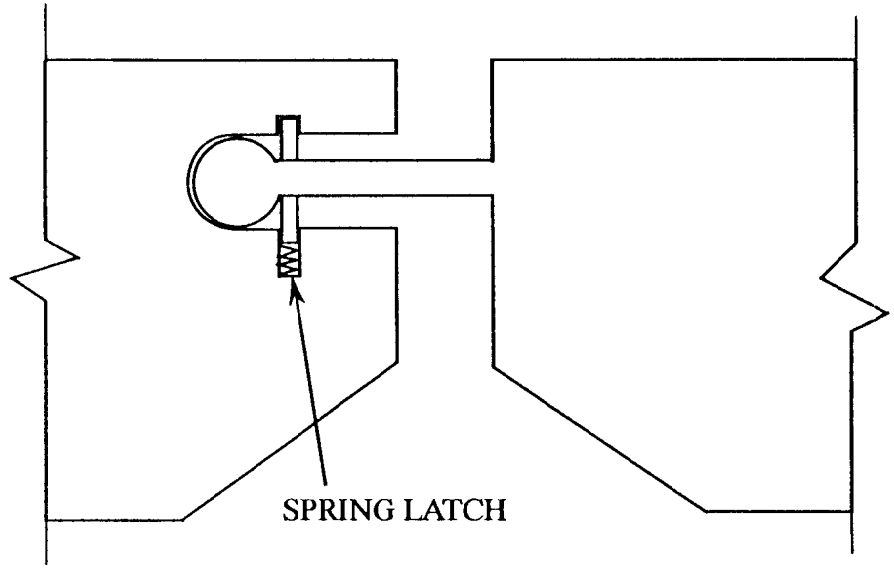

P. KANE

32

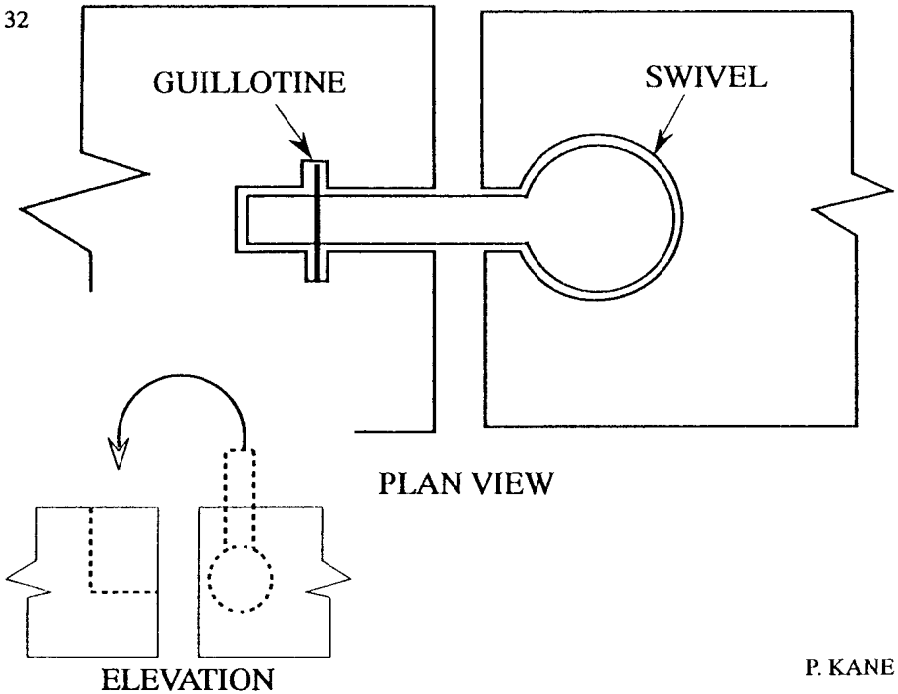

P. KANE

DOG - BONE

ERIK H. 5/30/94 - 13

10

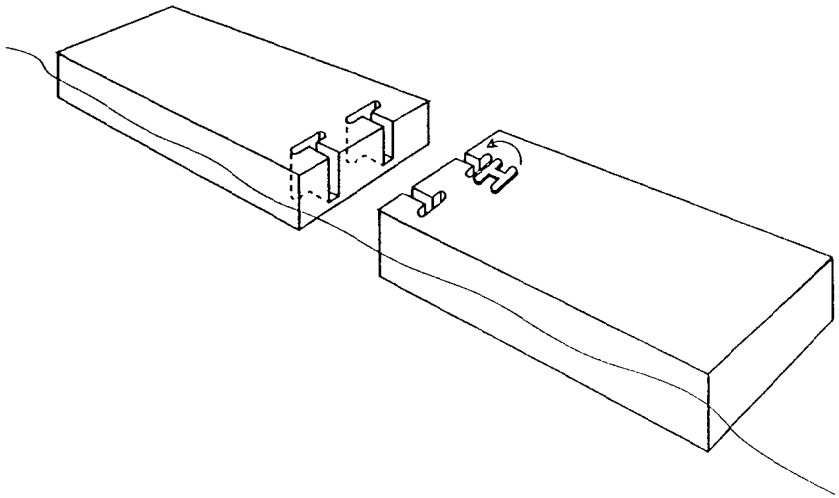

BH

82

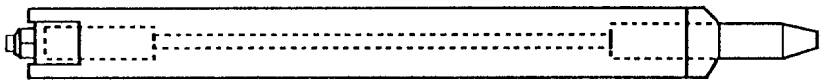

66

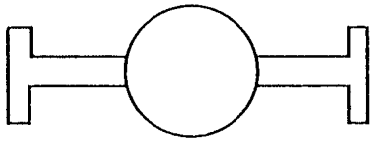

USE INDENTED SURFACE TO PROVIDE SHEAR RESISTANCE

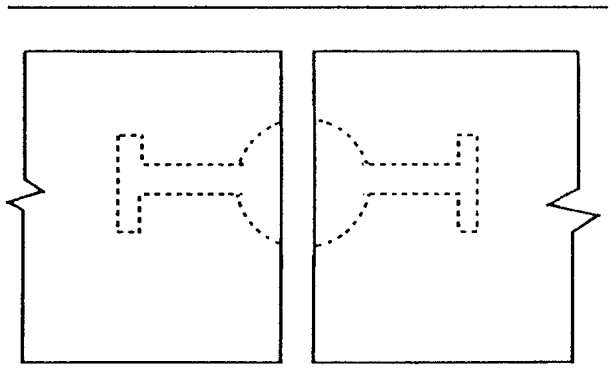

B.R.K.

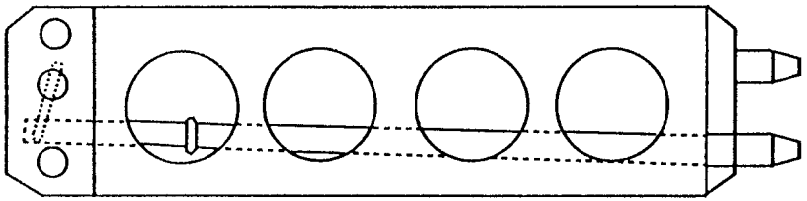

ERIK H. 5/30/94 - 14

FRICTION

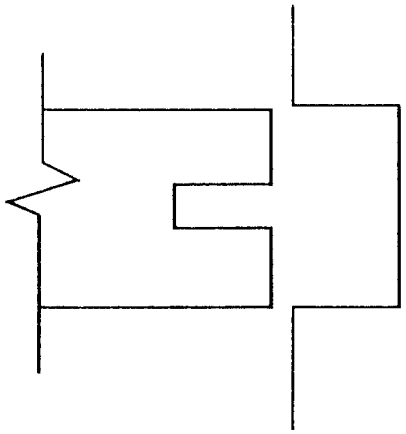

TINKER TOY

(A)

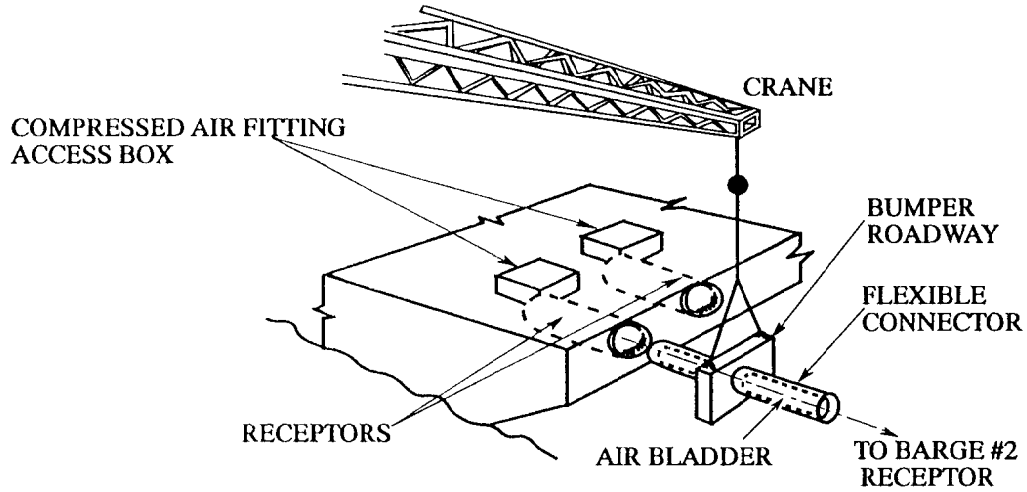

CYLINDRICAL FLEXIBLE CONNECTOR
WITH AIR BLADDER (A)

(B)

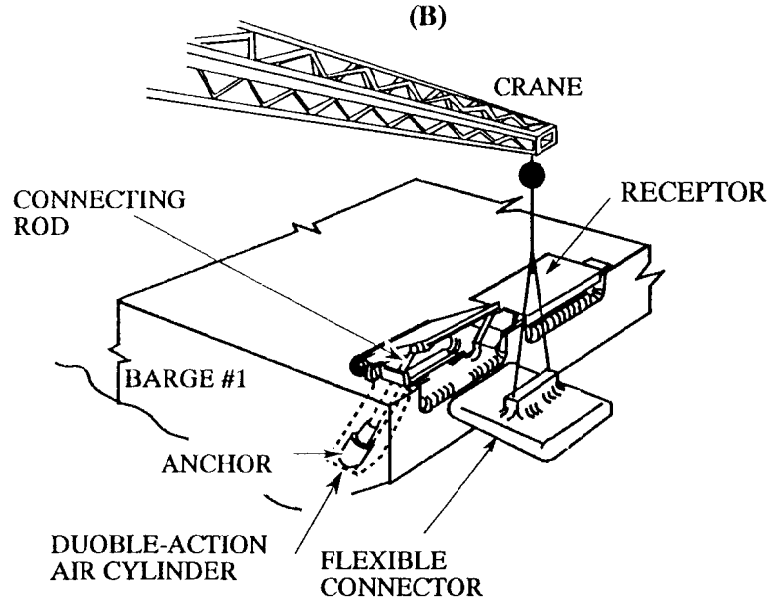

FLAT FLEXIBLE CONNECTOR
DRAWING (B)

48

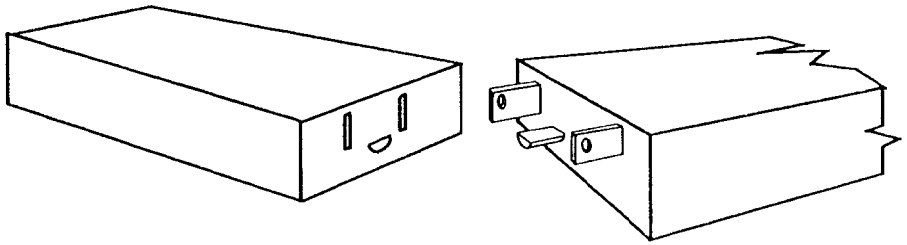

W.B.

96

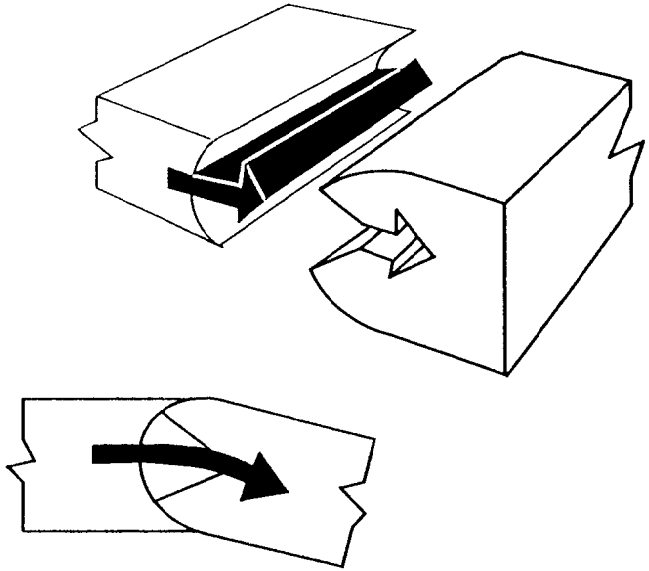

99

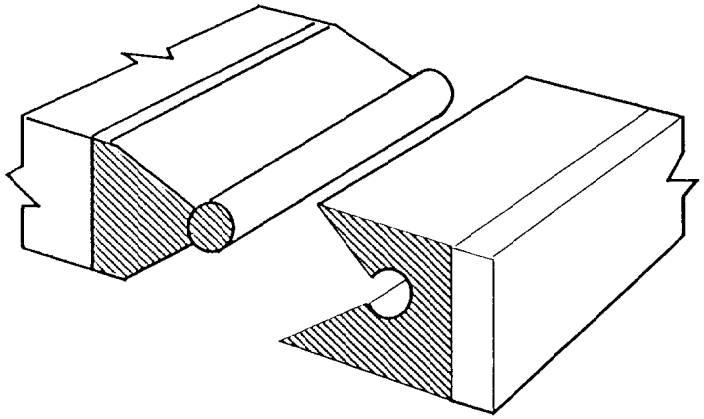

CB

CROSSED HATCH - RUBBER

HINGE

C-20

86

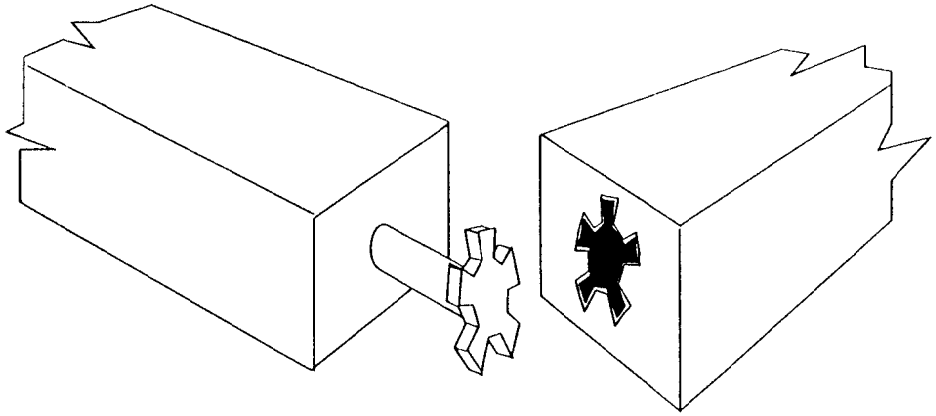

WB

11

PLAN

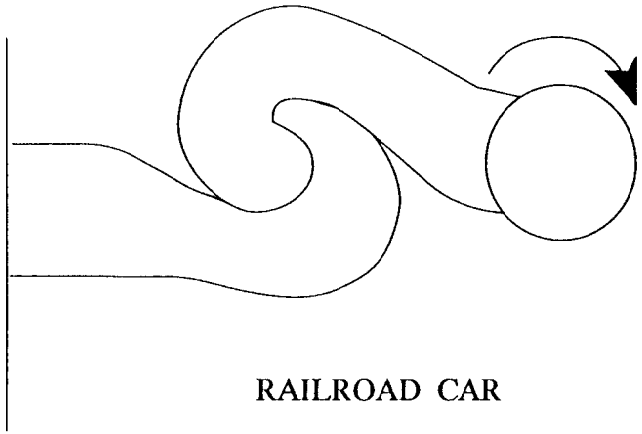

RAILROAD CAR

33

CHECK WITH NASA FOR

METHODS OF JOINING SPACE MODULES. DO THEY HAVE A STUDY?

TW

MICHELE ASKED ABOUT

RAIL ROAD TRAIN CONNECTORS... SKETCH UP HOW THEY WORK.. DOES DOC HAVE A STUB.

M.M.

LINK

86

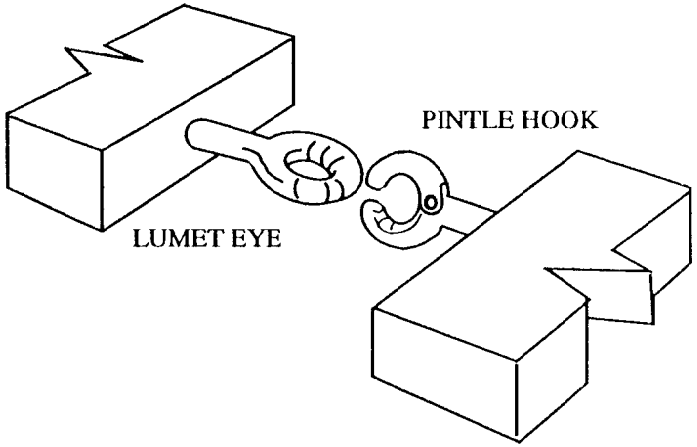

47

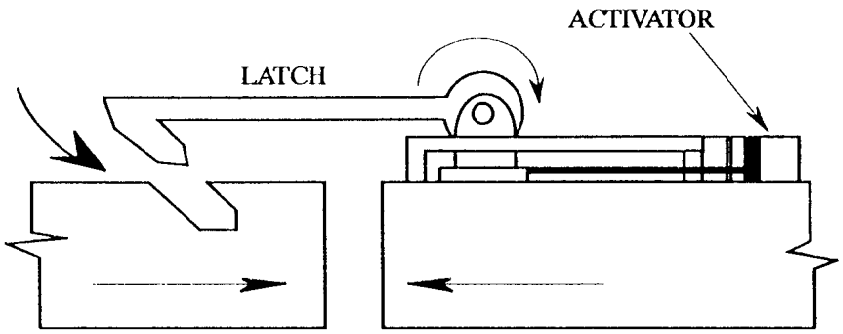

LATCH DRUMS INTO SLOT
THEN ACTUATOR SNUBS UP

T.W

C-22

46

CONNECTOR RIDES UP ON PIN ON
OTHER CONNECTOR DROPS IN PLACE
AND HOLD BY GRAVITY

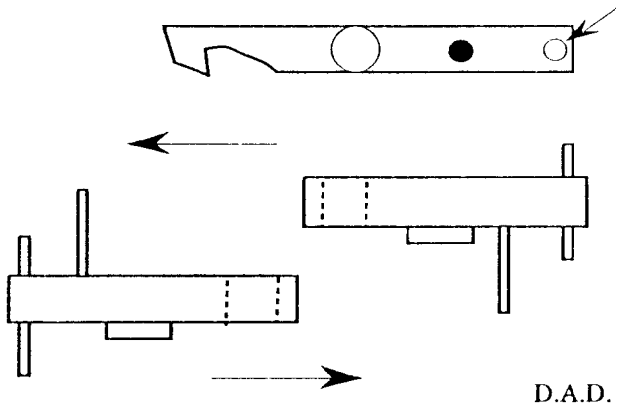

D.A.D.

74

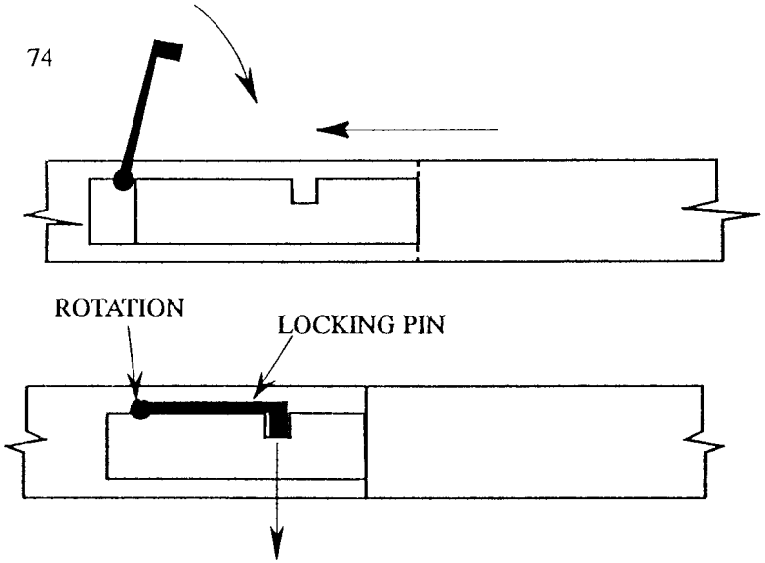

M.M.

85

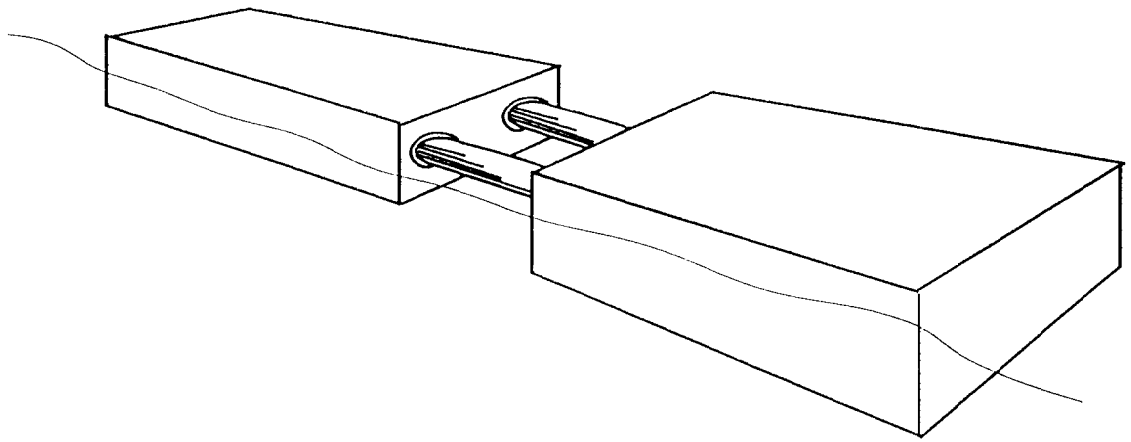

C-23

W.B.

Appendix D

PRIMITIVE CONCEPTS BY FBM INC. IN RESPONSE TO FY93 BAA CONTRACT

Figure D-1. Alignment concepts.

Concept: alignment	name: Ramshorn

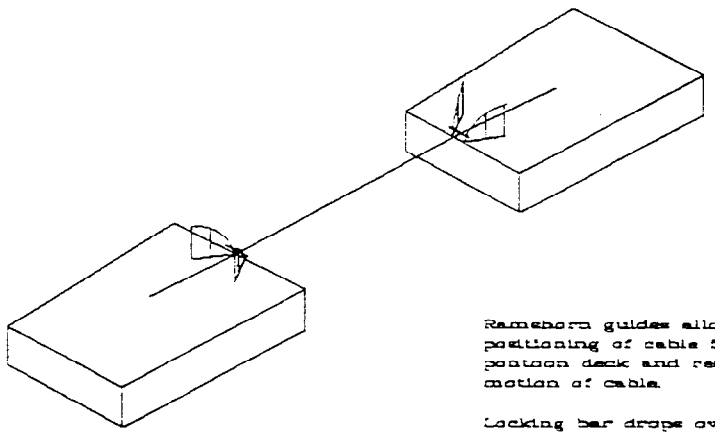

Ramshorn guides allow easy positioning of cable from pontoon deck and restrain motion of cable.

Locking bar drops over cable to restrain vertical movement.

Winch (powered or hand) used to wind in cable and pull modules together.

safety	in use	4	deck openings	5
	hazard if fails	1	protrusions	5
reliability		4	configuration scope	5
cost		5	pontoon implications	5
ease of handling		3	Abilities as a connector:	
special equt. needed		4	maintainability	0
implicit strength		3	reliability	0
complexity		4	ease of repair	0
weight		4	speed	0
robustness		4	cost	0
no. of parts		5	structural efficiency	0
other equt needed		4	complexity	0
damage tolerance		4	deck obstruction	0

Figure D-1. Continued.

Concept: alignment connection	name: HUPOZOMA

Hupozoma

(tensioned rope running round the hull of a classical Greek warship)

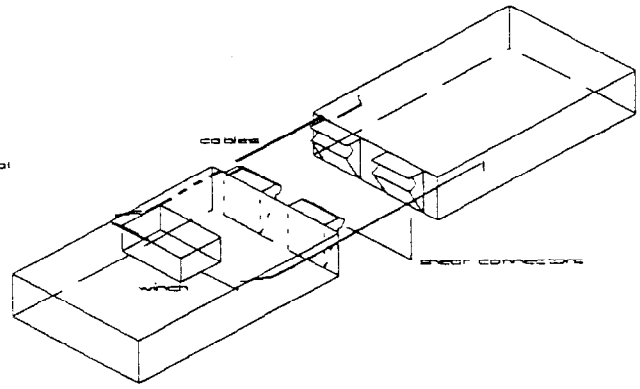

Cables are used to pull units together and to retain units in contact.

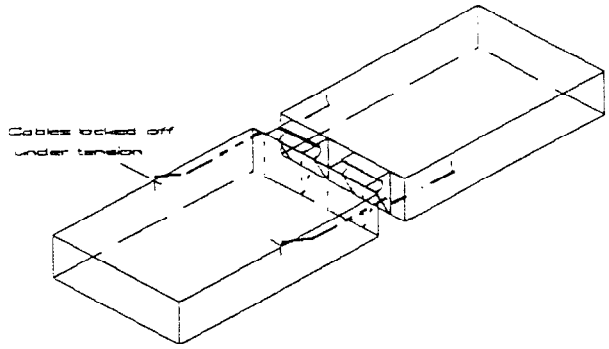

safety	in use	4	deck openings	5
	hazard if fails	1	protrusions	1
reliability		4	configuration scope	2
cost		5	pontoon implications	3
ease of handling		3	Abilities as a connector:	
special equt. needed		4	maintainability	4
implicit strength		3	reliability	3
complexity		4	ease of repair	2
weight		4	speed	4
robustness		4	cost	5
no. of parts		5	structural efficiency	2
other equt needed		4	complexity	4
damage tolerance		4	deck obstruction	5

Figure D-1. Continued.

Concept: alignment connection	name: Inflatable Link

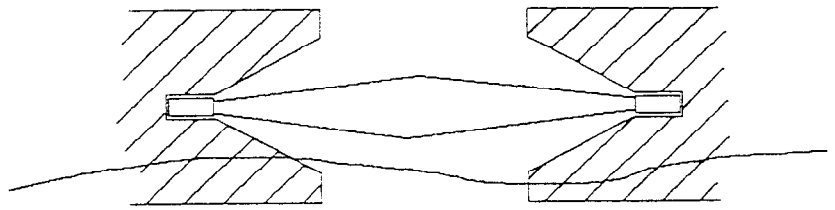

rubber tension link

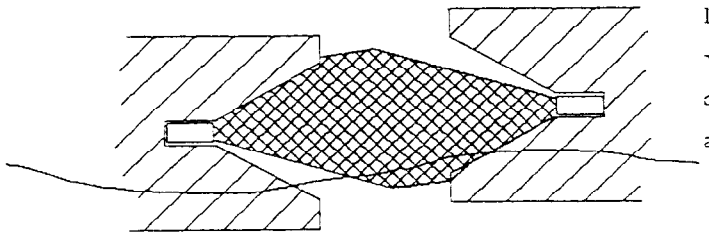

link inflated with water or compressed air

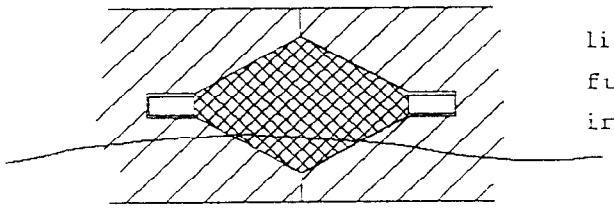

link fully inflated

safety	in use	4	deck openings	4
	hazard if fails	4	protrusions	5
reliability		3	configuration scope	4
cost		3	pontoon implications	2
ease of handling		4	Abilities as a connector:	
special equt. needed		4	maintainability	2
implicit strength		4	reliability	3
complexity		3	ease of repair	2
weight		3	speed	3
robustness		4	cost	3
no. of parts		4	structural efficiency	3
other equt needed		4	complexity	3
damage tolerance		4	deck obstruction	5

Figure D-1. Continued.

Concept: alignment connection	name: Madonna

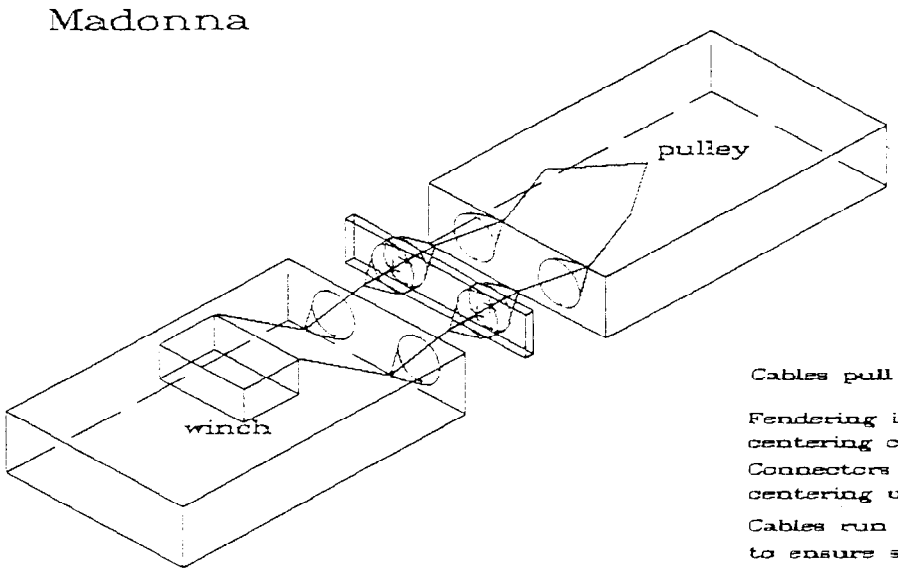

Cables pull assembly together.

Fendering incorporated in centering cones.

Connectors incorporated in centering unit.

Cables run through cones, to ensure self-centering.

safety	in use	4	deck openings	4
	hazard if fails	4	protrusions	5
reliability		4	configuration scope	3
cost		4	pontoon implications	2
ease of handling		3	**Abilities as a connector:**	
special equt. needed		3	maintainability	3
implicit strength		5	reliability	5
complexity		3	ease of repair	4
weight		3	speed	5
robustness		5	cost	3
no. of parts		4	structural efficiency	5
other equt needed		3	complexity	3
damage tolerance		2	deck obstruction	5

Figure D-1. Continued.

Concept: alignment	name: Floating tramlines

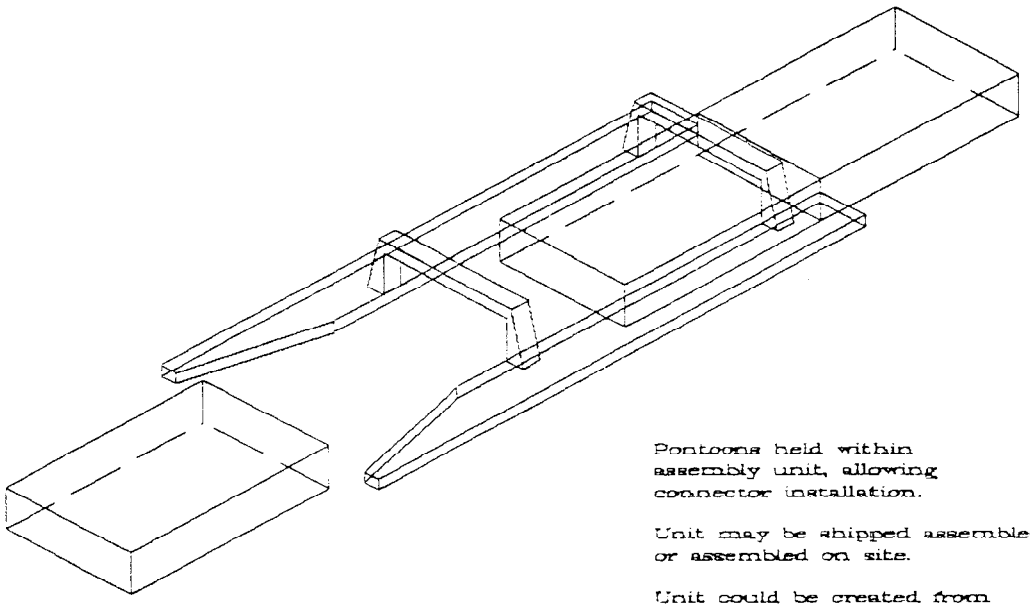

Pontoons held within assembly unit, allowing connector installation.

Unit may be shipped assembled or assembled on site.

Unit could be created from pontoon modules.

safety	in use	5	deck openings	5
	hazard if fails	2	protrusions	5
reliability		5	configuration scope	0
cost		4	pontoon implications	4
ease of handling		4	Abilities as a connector:	
special equt. needed		3	maintainability	0
implicit strength		0	reliability	0
complexity		3	ease of repair	0
weight		4	speed	0
robustness		4	cost	0
no. of parts		3	structural efficiency	0
other equt needed		2	complexity	0
damage tolerance		4	deck obstruction	0

Figure D-1. Continued.

Concept: alignment	name: Pressurised tubes

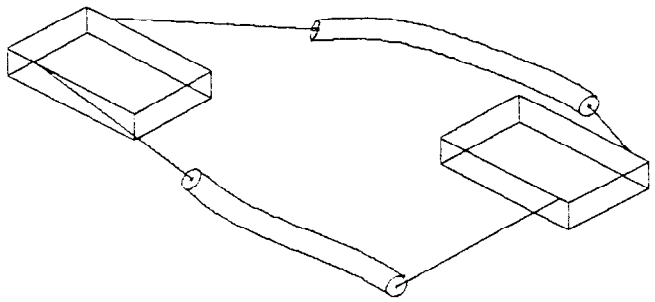

Lines from floating tubes brought abord

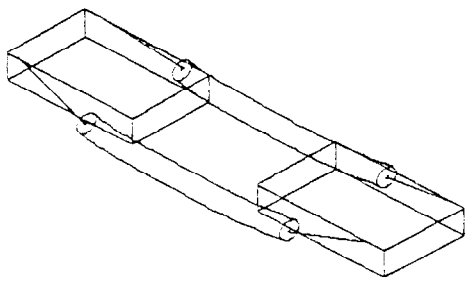

Lines used to bring tubes alongside; inflation of tubes begins.

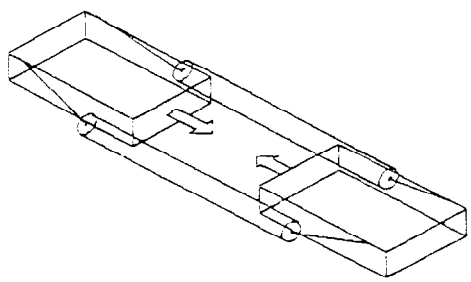

Tubes are inflated.
Purchase on stiffened tubes used to bring pontoons together in alignment.

safety	in use	4	deck openings	5
	hazard if fails	3	protrusions	5
reliability		3	configuration scope	4
cost		3	pontoon implications	5
ease of handling		3	Abilities as a connector:	
special equt. needed		3	maintainability	0
implicit strength		0	reliability	0
complexity		3	ease of repair	0
weight		4	speed	0
robustness		3	cost	0
no. of parts		3	structural efficiency	0
other equt needed		3	complexity	0
damage tolerance		2	deck obstruction	0

Figure D-1. Continued.

Concept: alignment connection	name: Folding Ends

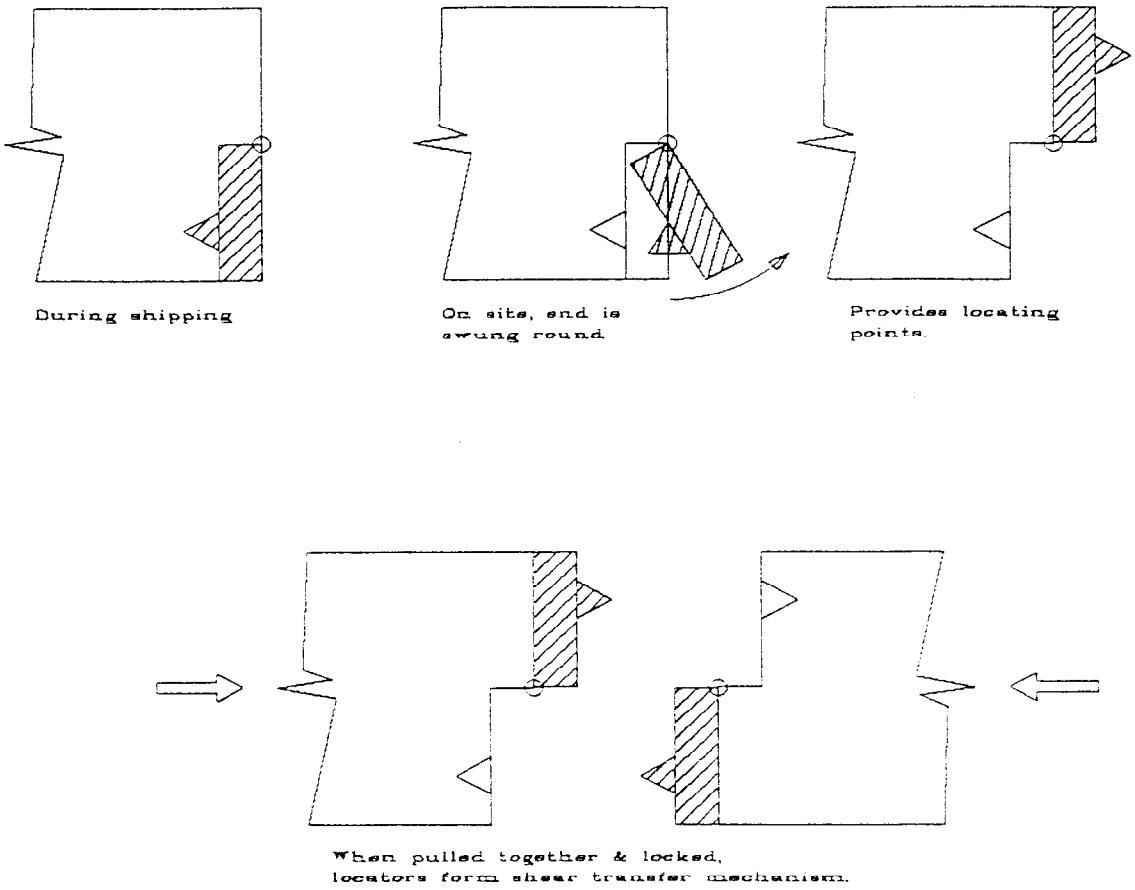

safety	in use	4	deck openings	5
	hazard if fails	1	protrusions	3
reliability		4	configuration scope	2
cost		3	pontoon implications	2
ease of handling		3	Abilities as a connector:	
special equt. needed		4	maintainability	3
implicit strength		5	reliability	4
complexity		3	ease of repair	2
weight		3	speed	4
robustness		4	cost	4
no. of parts		4	structural efficiency	3
other equt needed		4	complexity	3
damage tolerance		3	deck obstruction	5

Figure D-1. Continued.

Concept: alignment	name: Bias Net

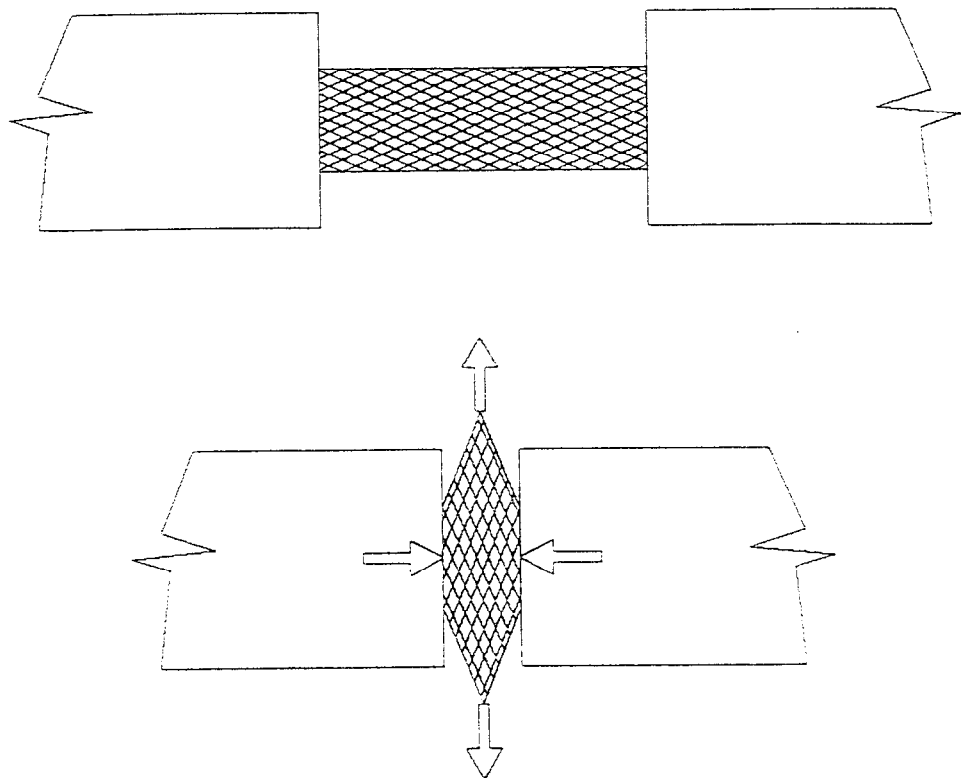

safety	in use	3	deck openings	5
	hazard if fails	2	protrusions	5
reliability		3	configuration scope	5
cost		5	pontoon implications	5
ease of handling		3	Abilities as a connector:	
special equt. needed		5	maintainability	0
implicit strength		0	reliability	0
complexity		4	ease of repair	0
weight		5	speed	0
robustness		4	cost	0
no. of parts		5	structural efficiency	0
other equt needed		5	complexity	0
damage tolerance		3	deck obstruction	0

Figure D-1. Continued.

Concept: alignment	name: Powered Proboscis

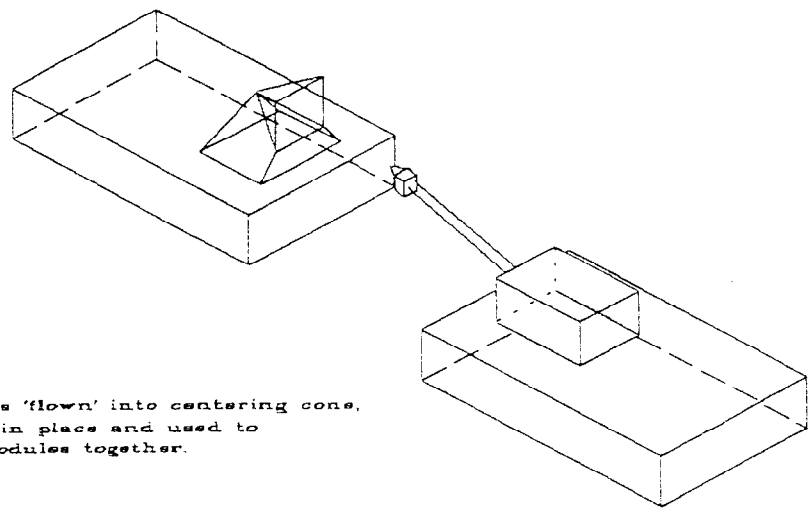

safety	in use	5	deck openings	5
	hazard if fails	4	protrusions	5
reliability		3	configuration scope	5
cost		2	pontoon implications	5
ease of handling		3	Abilities as a connector:	
special equt. needed		2	maintainability	0
implicit strength		0	reliability	0
complexity		2	ease of repair	0
weight		2	speed	0
robustness		3	cost	0
no. of parts		3	structural efficiency	0
other equt needed		3	complexity	0
damage tolerance		2	deck obstruction	0

Figure D-1. Continued.

Concept: alignment	name: Cat's Cradle

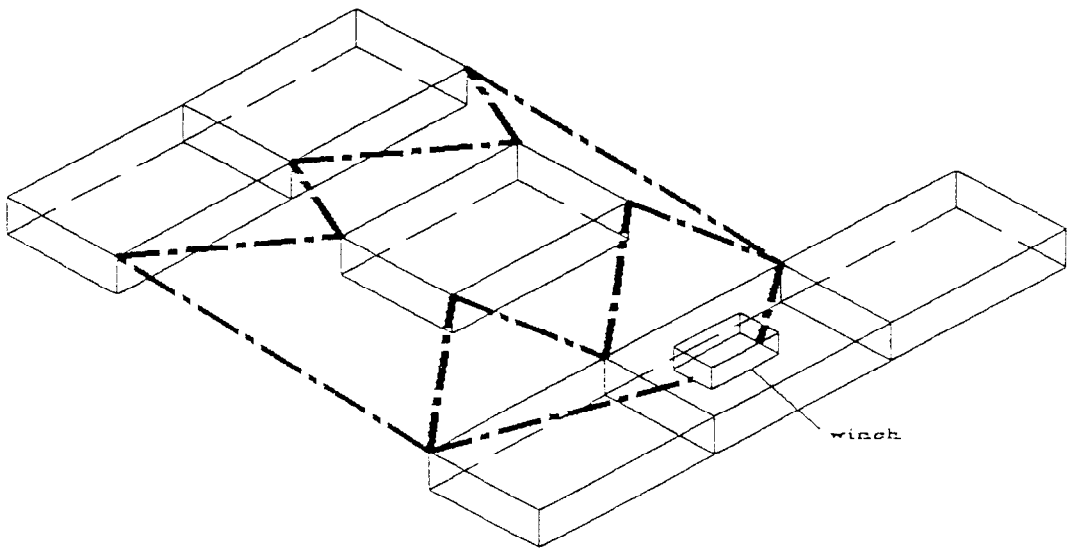

Cable is reeved through blocks;
tensioning cable brings
modules together.

Note that this arrangement is schematic only.

safety	in use	1	deck openings	5
	hazard if fails	3	protrusions	5
reliability		4	configuration scope	5
cost		5	pontoon implications	5
ease of handling		2	Abilities as a connector:	
special equt. needed		3	maintainability	0
implicit strength		0	reliability	0
complexity		4	ease of repair	0
weight		4	speed	0
robustness		4	cost	0
no. of parts		3	structural efficiency	0
other equt needed		4	complexity	0
damage tolerance		3	deck obstruction	0

Figure D-1. Continued.

Concept: alignment	name: SWATH Docking Station

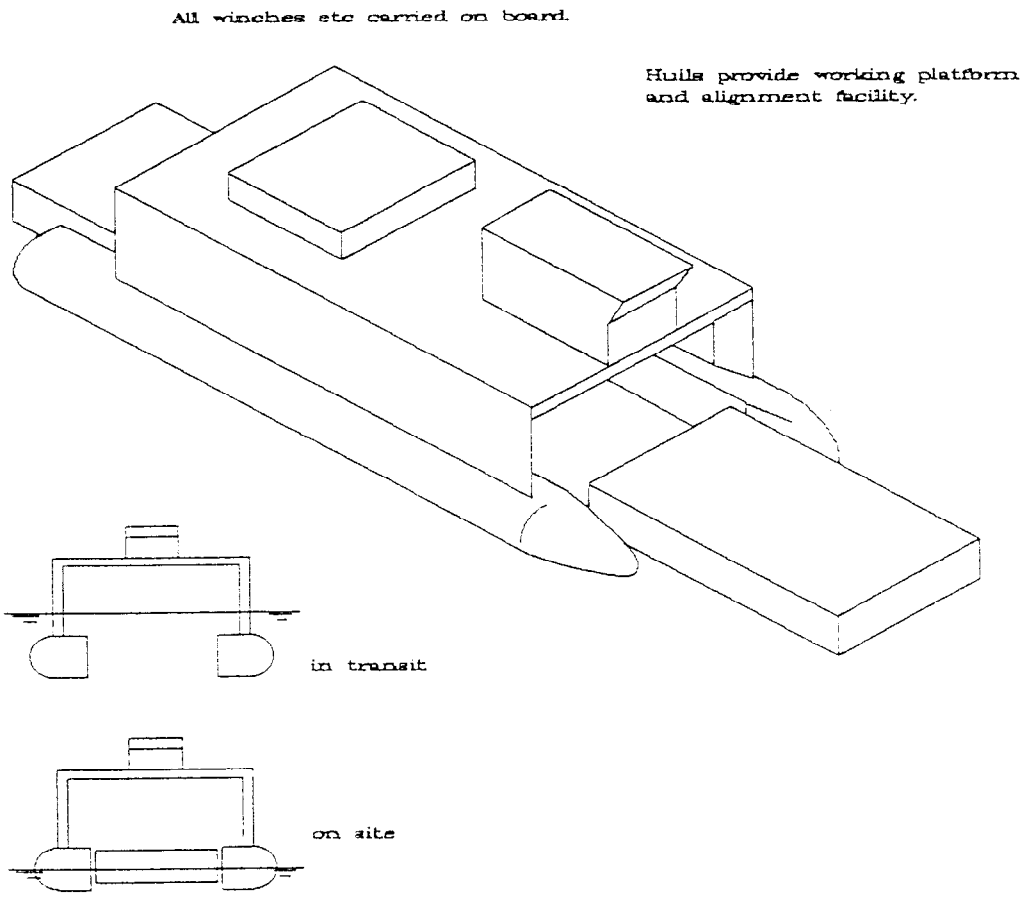

safety	in use	5	deck openings	5
	hazard if fails	0	protrusions	5
reliability		3	configuration scope	0
cost		0	pontoon implications	5
ease of handling		5	Abilities as a connector:	
special equt. needed		5	maintainability	0
implicit strength		0	reliability	0
complexity		1	ease of repair	0
weight		5	speed	0
robustness		4	cost	0
no. of parts		4	structural efficiency	0
other equt needed		5	complexity	0
damage tolerance		1	deck obstruction	0

Figure D-1. Continued.

Concept: alignment connection	name: Barrel

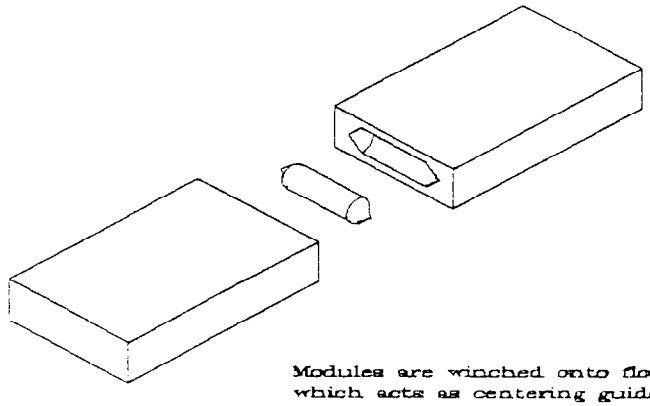

Modules are winched onto floating drum, which acts as centering guide.

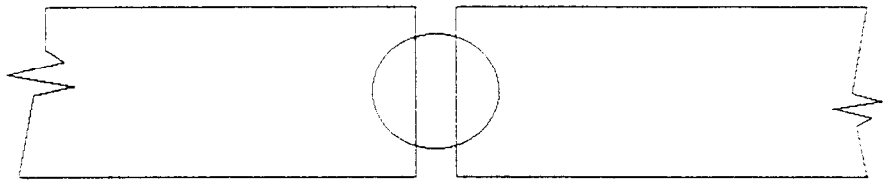

Once located, system may be secured as pivot or locked as rigid connection.

safety	in use	3	deck openings	5
	hazard if fails	4	protrusions	4
reliability		4	configuration scope	2
cost		3	pontoon implications	2
ease of handling		3	Abilities as a connector:	
special equt. needed		3	maintainability	3
implicit strength		3	reliability	4
complexity		4	ease of repair	3
weight		3	speed	4
robustness		2	cost	3
no. of parts		4	structural efficiency	4
other equt needed		3	complexity	3
damage tolerance		2	deck obstruction	5

Figure D-2. Connection concepts.

Concept: connection	name: Integral MEXE

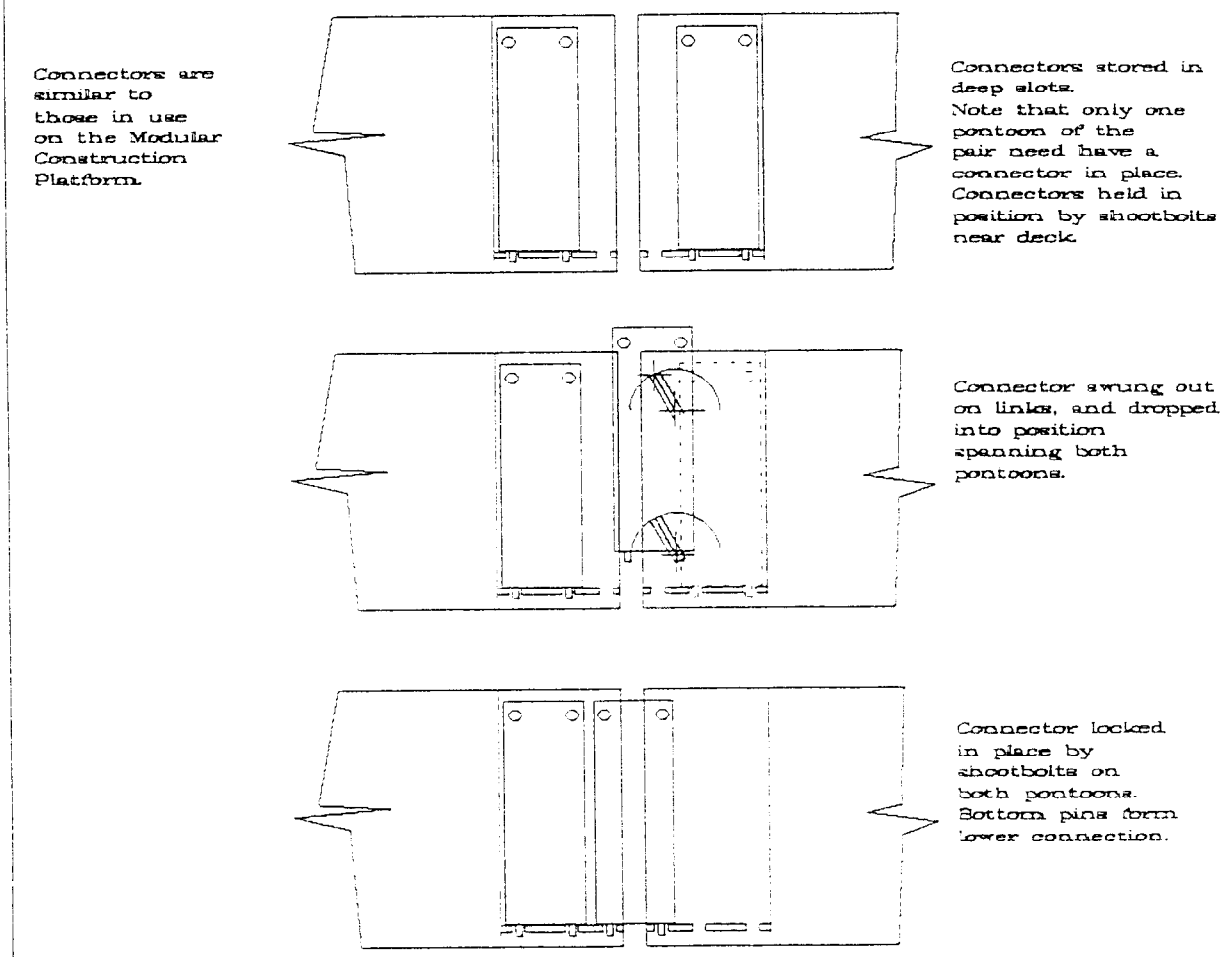

safety	in use	4	deck openings	4
	hazard if fails	5	protrusions	5
reliability		4	configuration scope	5
cost		4	pontoon implications	4
ease of handling		4	Abilities as a connector:	
special equt. needed		5	maintainability	4
implicit strength		5	reliability	4
complexity		4	ease of repair	5
weight		3	speed	5
robustness		4	cost	3
no. of parts		5	structural efficiency	5
other equt needed		5	complexity	4
damage tolerance		4	deck obstruction	5

Figure D-2. Continued.

Concept: connection	name: Extending truss

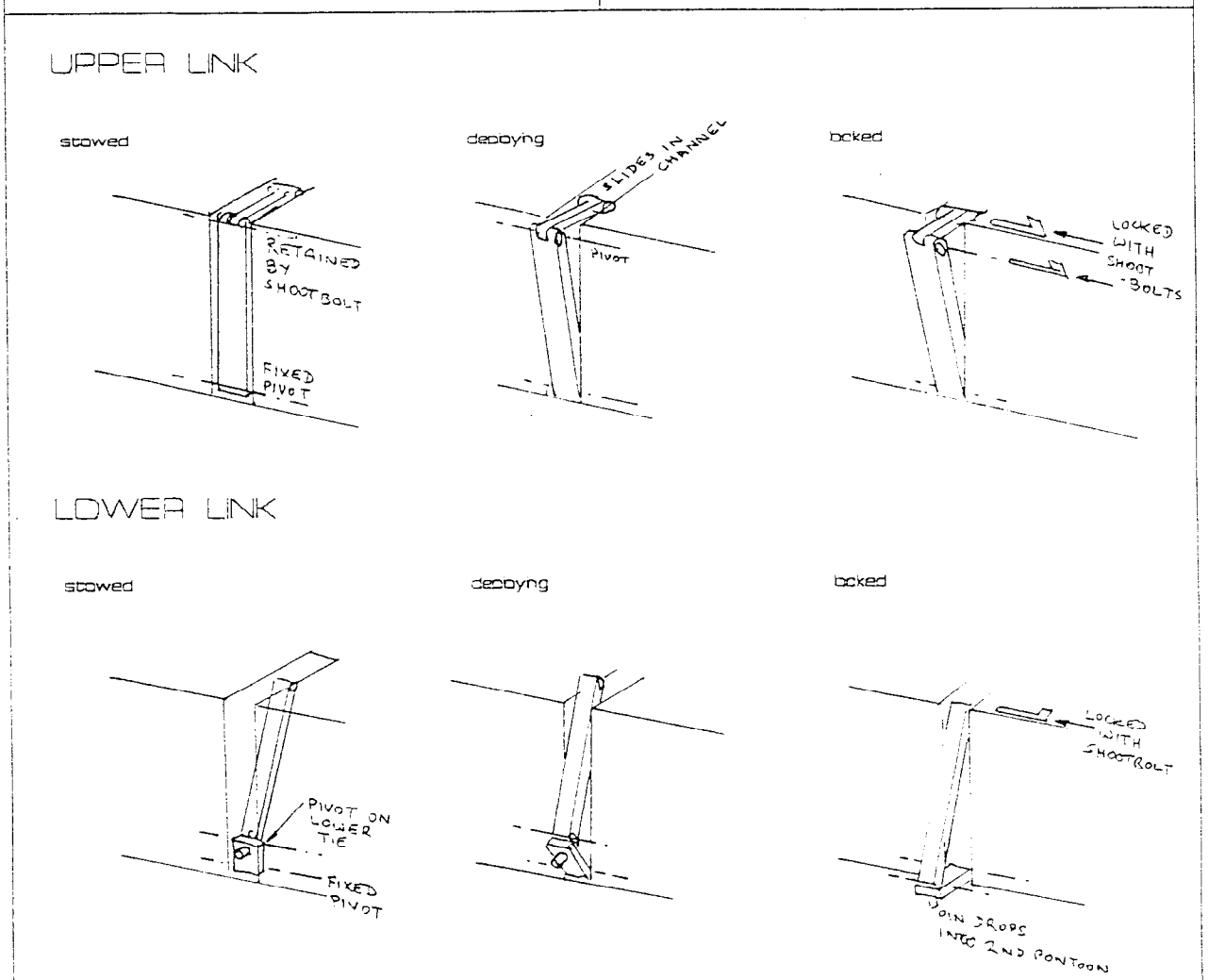

safety	in use	4	deck openings	4
	hazard if fails	5	protrusions	5
reliability		4	configuration scope	3
cost		5	pontoon implications	4
ease of handling		5	Abilities as a connector:	
special equt. needed		5	maintainability	3
implicit strength		4	reliability	4
complexity		4	ease of repair	2
weight		5	speed	5
robustness		4	cost	5
no. of parts		5	structural efficiency	5
other equt needed		5	complexity	4
damage tolerance		3	deck obstruction	5